HISTORIC AND DESIGN REVIEW COMMISSION

March 06, 2015

Agenda Item No: 1

HDRC CASE NO:	**2015-082**
COMMON NAME:	18402 Corporate Woods Drive / Gold Canyon Park
LEGAL DESCRIPTION:	NCB 34952 BLK LOT P-8A 16.672 & NCB 34954 BLK LOT P-4H 32.728 "REDLAND WOODS" ANNEXATION 2008 RESURVEY PER DEED 13239/1127
ZONING:	R6 ERZD
CITY COUNCIL DIST.:	9
APPLICANT:	Chuck Shine
OWNER:	City of San Antonio, City of San Antonio
TYPE OF WORK:	Park Development

REQUEST:

The applicant is requesting a Certificate of Appropriateness for approval to:

1. Construct a new concrete driveway and asphalt parking lot (12 spaces). The proposed parking lot will be located near the southwest entrance of the park.
2. Install new wayfinding and trailhead signs.
3. Install new seating. The seating will consist of inconspicuous, natural-looking stone blocks. The proposed design of the seating is meant to blend in with the landscape.
4. Create approximately 6,000 linear square feet of eight-foot wide concrete trails.
5. Install park amenities including bike racks, exercise equipment, and drinking fountains.
6. Construct a portable toilet enclosure.
7. Install a new fence. The fence will border Redland Woods HOA Park and Gold Canyon Dr.

APPLICABLE CITATIONS:

UDC Section 35-642 – New Construction of Buildings and Facilities:

a. Site and Setting

1. Building sites should be planned to take into consideration existing natural climatic and topographical features. The intrusive leveling of the site should be avoided. Climatic factors such as sun, wind, and temperature should become an integral part of the design to encourage design of site-specific facilities which reinforces the individual identity of a neighborhood and promotes energy efficient facilities.
2. Accessibility from streets should be designed to accommodate safe pedestrian movement as well as vehicular traffic. Where possible, parking areas should be screened from view from the public right-of-way by attractive fences, berms, plantings or other means.
3. Historically significant aspects of the site shall be identified and if possible incorporated into the site design. Historic relationships between buildings, such as plazas or open spaces, boulevards or axial relationships should be maintained.

b. Building Design

1. Buildings for the public should maintain the highest quality standards of design integrity. They should elicit a pride of ownership for all citizens. Public buildings should reflect the unique and diverse character of San Antonio and should be responsive to the time and place in which they were constructed.
2. Buildings shall be in scale with their adjoining surroundings and shall be in harmonious conformance to the identifying quality and characteristics of the neighborhood. They shall be compatible in design, style and materials. Reproductions of styles and designs from a different time period are not encouraged, consistent with the secretary of the interior's standards. Major horizontal and vertical elements in adjoining sites should be respected.
3. Materials shall be suitable to the type of building and design in which they are used. They shall be durable and easily maintained. Materials and designs at pedestrian level shall be at human scale, that is they shall be designed to be understood and appreciated by someone on foot. Materials should be selected that respect the historic character of the surrounding area in texture, size and color.

5. Colors shall be harmonious with the surrounding environment, but should not be dull. Choice of color should reflect the local and regional character. Nearby historic colors shall be respected.
8. Auxiliary design. The site should take into account the compatibility of landscaping, parking facilities, utility and service areas, walkways and appurtenances. These should be designed with the overall environment in mind and should be in visual keeping with related buildings, structures and places.

FINDINGS:

a. The design and layout of the proposed park development considers the existing natural climatic and topographical features of the site. This is consistent with the UDC Section 35-642.a.1. and b.8.
b. The proposed park development and amenities are appropriate to help make the park accessible and inviting to users. This is consistent with the UDC Section 35-642.b.1 in terms of creating high design quality standards for public facilities.
c. The proposed new parking area is consistent with the UDC Section 35-642.a.2-3.
d. The design, materials and color of the proposed signs, seating and fence are consistent with the UDC Section 25-642.b.3. and 5.
e. The size and scale of the proposed signs and fence is consistent with UDC height regulations.
f. The proposed trail is appropriate for its location and will improve accessibility to the park. This is consistent with the UDC Section 35-642.a.3.
g. The Project has been reviewed by the City Archeologist.

RECOMMENDATION:

Staff recommends approval of all items based on findings a through g.

CASE MANAGER:

Alyson Smith

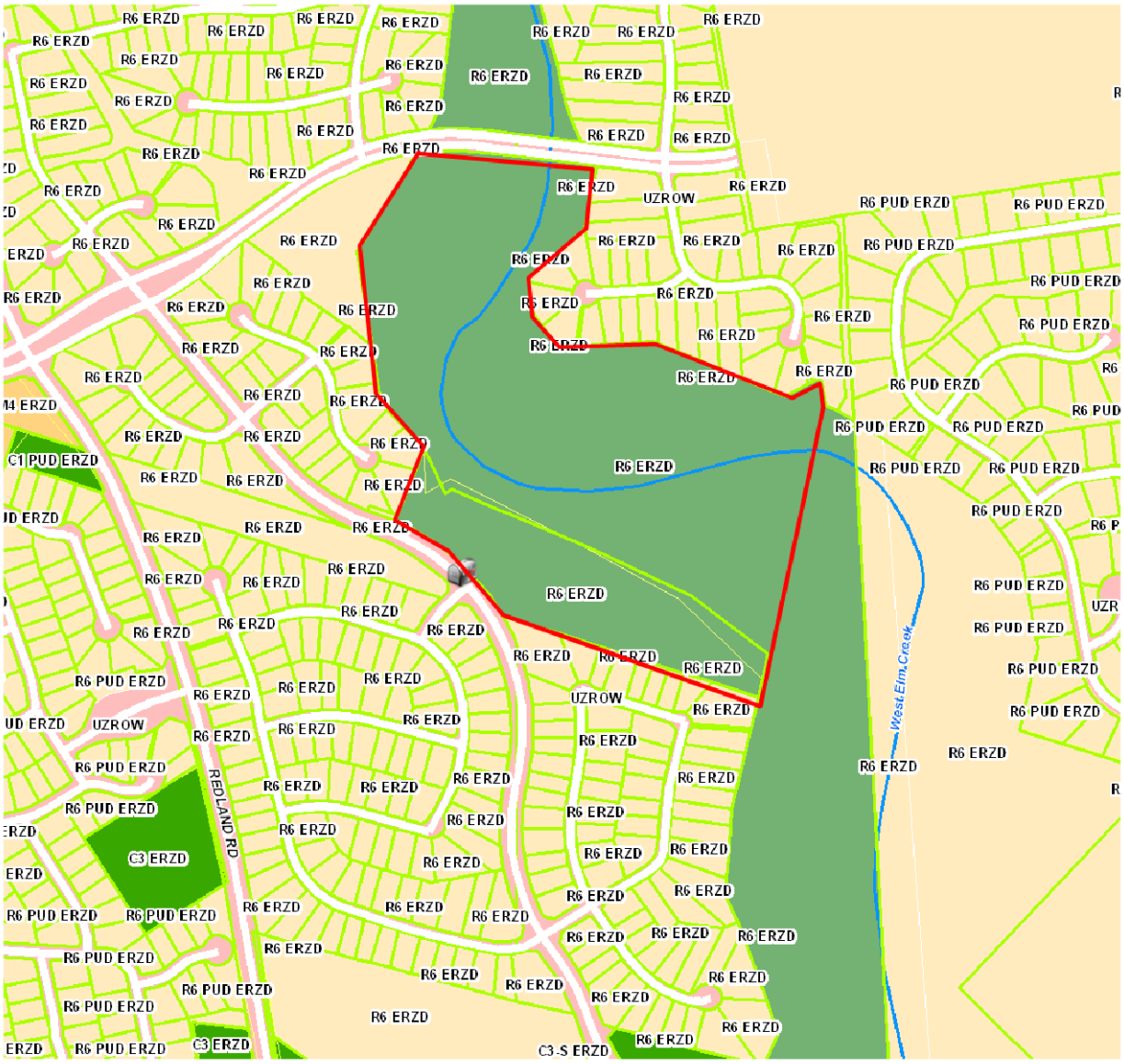

N

18402 Corporate Woods Dr.

Printed:Feb 24, 2015

The City of San Antonio does not guarantee the accuracy, adequacy, completeness or usefulness of any information. The City does not warrant the completeness, timeliness, or positional, thematic, and attribute accuracy of the GIS data. The GIS data, cartographic products, and associated applications are not legal representations of the depicted data. Information shown on these maps is derived from public records that are constantly undergoing revision. Under no circumstances should GIS-derived products be used for final design purposes. The City provides this information on an "as is" basis without warranty of any kind, express or implied, including but not limited to warranties of merchantability or fitness for a particular purpose, and assumes no responsibility for anyone's use of the information.

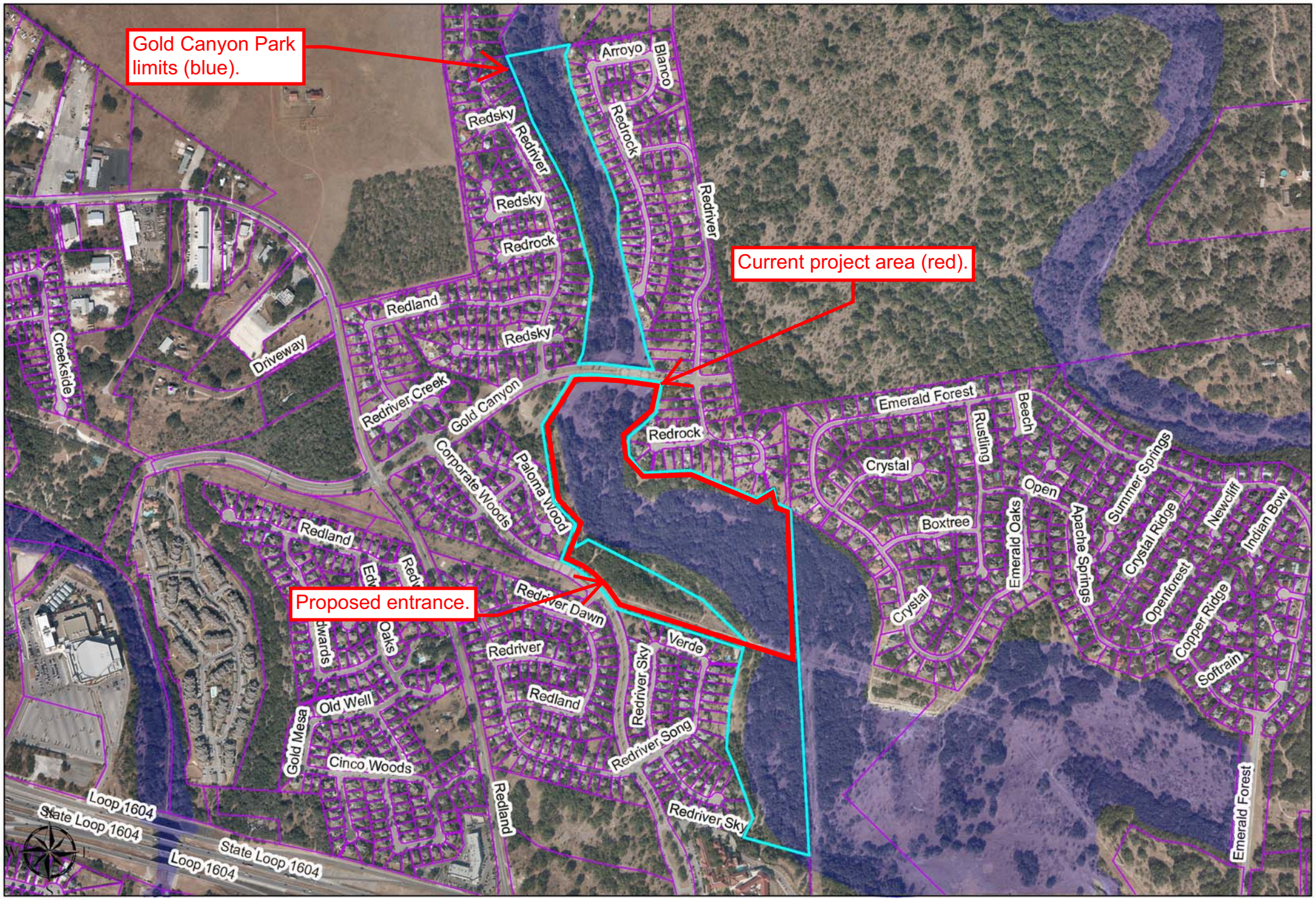
Gold Canyon Park limits (blue).
Current project area (red).
Proposed entrance.
Arroyo
Blanco
Redsky
Redriver
Redrock
Redland
Driveway
Creekside
Redriver Creek
Gold Canyon
Corporate Woods
Paloma Wood
Emerald Forest
Rustling
Beech
Crystal
Open
Boxtree
Emerald Oaks
Apache Springs
Summer Springs
Crystal Ridge
Newcliff
Indian Bow
Openforest
Copper Ridge
Softrain
Redriver Dawn
Verde
Redriver Sky
Redriver Song
Old Well
Gold Mesa
Cinco Woods
Loop 1604
State Loop 1604

Gold Canyon Park
Sample of Proposed Seating

Gold Canyon Park
Samples of Proposed Signage

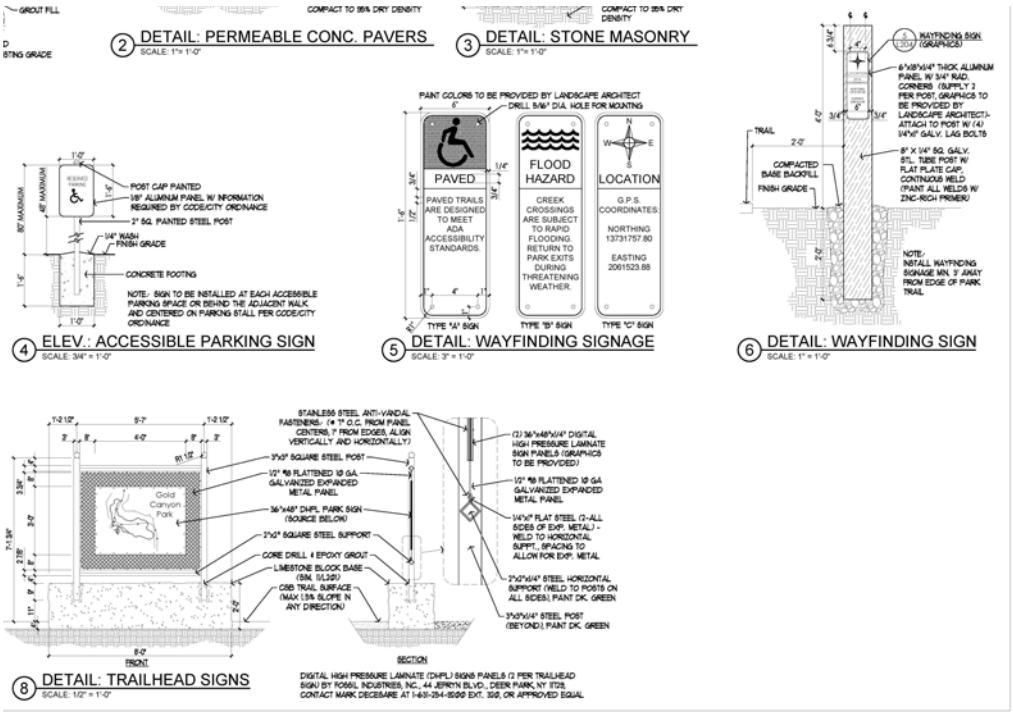

PAVED
THESE PAVED TRAILS HAVE GENTLE SLOPES
TRAILS MEET ADA DESIGN STANDARDS
N
W
E
S
LOCATION
G.P.S. COORDINATES
NORTHING
13731751.76
EASTING
2061519.15

Gold Canyon Park
Sample of Proposed Trail

GOLD CANYON PARK
SITE DEVELOPMENT NARRATIVE
November 11, 2014

Gold Canyon Park will become a new city park in the Redland Road area of San Antonio North. Situated in classic Texas Hill Country terrain the property includes both hilltop elevations and wooded bottomland. The lower portions of the property rest on an alluvial floodplain of West Elm Creek, enjoys some 6000 feet of creek frontage and is bisected by Gold Canyon Road. Vegetation is comprised of mature hardwoods and juniper thickets along the creek channel giving way to dense oak and juniper stands on the terraced areas above. Environmental assessment has found no sensitive areas on the property.

This is a phased development with current emphasis on the portion lying between Gold Canyon Road to the north and an overhead utility easement to the south. The property is bordered on the east, south and west by residential neighborhoods and HOA-controlled open space. Access to the park will be a park entrance at the intersection of Corporate Woods Drive and Palo Crest Street. Work at this location will include a new concrete driveway and asphalt parking (12 spaces) along with signage, seating, trailhead, bike racks, portable toilet enclosure, and approximately 6000 lineal feet of eight-foot wide concrete trial. Additional features including exercise equipment and a drinking fountain will be included in the bid advertisement as add alternate items. The trail system will descend some 55 feet from the park entrance to creek bottom, winding through wooded hillsides and crossing West Elm Creek at two locations. The entire trail system is designed within TAS guidelines. The park entrance, parking and trailhead are situated on high ground, above the 100 yr. flood line, and afford numerous vantage points of the valley below. Minimal clearing will be necessary for trail construction as the chosen route largely aligns with impromptu user trails already in place. Additional selective (and supervised) clearing will augment views along the trail and also provide needed sunlight exposure for water pollution abatement-required re-vegetation.

The proposed park is upstream from McAllister Park and inclusion in a potential creek-side trail way system in the future is possible.

Gold Canyon Park
Site Photos

West Creek Character

Existing Usage Patterns

Proposed Park Entrance and Trailhead Sites

Woodland Character

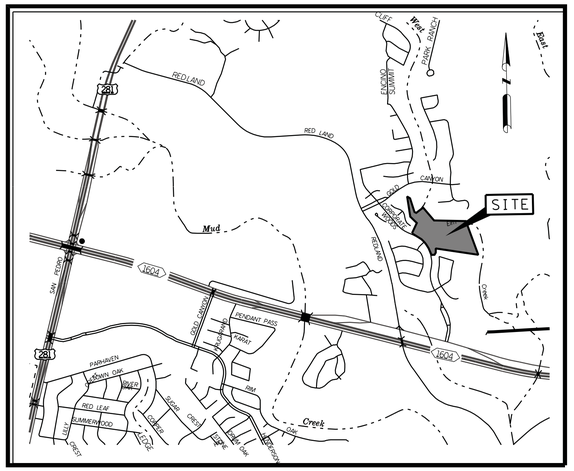

LOCATION MAP
N.T.S.

CITY OF SAN ANTONIO

GOLD CANYON PARK

18402 CORPORATE WOODS DRIVE
SAN ANTONIO, TEXAS

CONSTRUCTION DOCUMENT
100% REVIEW SET

DATE OF ISSUE: 11.07.2014

PROJECT NUMBER
422 - 0300

FUNDING
2012 CITY BOND PROGRAM

CITY MANAGER
SHERYL SCULLEY

PARKS & RECREATION DIRECTOR
XAVIER URRUTIA

TCI DIRECTOR
MIKE FRISBIE

PROJECT MANAGER
JAMAAL MORENO
LANDSCAPE ARCHITECT
PH. # 210-207-6924
FAX # 210-207-2197

CONSULTANT
IDC, INC.
PLANNERS, ENGINEERS, PROGRAM MANAGERS
PH. # 210-448-1800
FAX # 210-448-1829

SHEET INDEX

G101 OVERALL PROJECT LAYOUT
G102 GENERAL NOTES
G103 SUPPLEMENTAL GENERAL NOTES
G104 OVERALL PROJECT SUMMARY
TP100 TREE STAND DELINEATION
TP101 TREE PROTECTION PLAN OVERALL
TP102 TREE PROTECTION PLAN ENLARGEMENT
TP103 TREE PROTECTION DETAILS
C100 PARKING LAYOUT
C101 CIVIL DETAILS
C102 CIVIL DETAILS
C103 CIVIL DETAILS
C200 STORMWATER POLLUTION PREVENTION PLAN
C201 DETAILED STORMWATER POLLUTION PREVENTION PLAN
C202 STORMWATER POLLUTION PREVENTION PLAN NARRATIVE
C203 PAVEMENT MARKINGS AND SIGNING FOR ACCESSIBLE PARKING PM(AP) - 98
C300 CIVIL UTILITY/DEMO PLAN
C301 CIVIL UTILITY DETAILS
C400 TRAFFIC CONTROL PLAN
C401 TRAFFIC PLAN
C500 FEMA DRAINAGE AREA EXHIBIT
L100 LANDSCAPE SITE PLAN OVERALL
L101-L109 LANDSCAPE SITE PLANS ENLARGEMENT
L200 LANDSCAPE TRAIL CONDITIONS
L201 LANDSCAPE CONSTRUCTION DETAILS
L202 LANDSCAPE CONSTRUCTION DETAILS
L203 LANDSCAPE CONSTRUCTION DETAILS
L204 LANDSCAPE CONSTRUCTION DETAILS
L205 LANDSCAPE CONSTRUCTION DETAILS
L300 LANDSCAPE CODE COMPLIANCE PLAN
E100-E101 OVERALL WATER POLLUTION ABATEMENT PLAN

CITY COUNCIL

MAYOR
IVY R. TAYLOR

COUNCIL

DIEGO BERNAL	DISTRICT 1
IVY R. TAYLOR	DISTRICT 2
REBECCA J. VIAGRAN	DISTRICT 3
REY SALDANA	DISTRICT 4
SHIRLEY GONZALES	DISTRICT 5
RAY LOPEZ	DISTRICT 6
CRIS MEDINA	DISTRICT 7
RON NIRENBERG	DISTRICT 8
JOE KRIER	DISTRICT 9
MIKE GALLAGHER	DISTRICT 10

IDC Planners - Engineers - Program Managers

RIALTO STUDIO

PARKS & RECREATION SAN ANTONIO

CITY OF SAN ANTONIO
TRANSPORTATION & CAPITAL IMPROVEMENTS

LANDSCAPE ARCHITECTS: RIALTO STUDIO, INC
LANDSCAPE ARCHITECTS
2425 BROADWAY SA, TX 78215
PH # 210-828-1155
FAX# 210-828-1399

CIVIL ENGINER: VICKERY AND ASSOCIATES, INC.
CONSULTING ENGINEERS
12940 COUNTRY PKWY SA, TX 78216
PH# 210-349-3271

"Although it is not the responsibility of the City to provide sets of drawings and/or specifications to the successful Contractor for the construction of this project, the City may provide extra or returned sets that are available, if any from the bidding process. All other sets as deemed required by the Contractor, for the purposes of construction of this project, shall be obtained and paid by the Contractor."

OUR MISSION: TOGETHER, DEDICATED TO OUR COMMUNITY...BUILDING A GREAT SAN ANTONIO

TRANSPORTATION AND CAPITAL IMPROVEMENTS

MUNICIPAL PLAZA BUILDING 114 W. COMMERCE SAN ANTONIO, TX 78238 PH # 210-207-8140 FAX # 210-207-2197

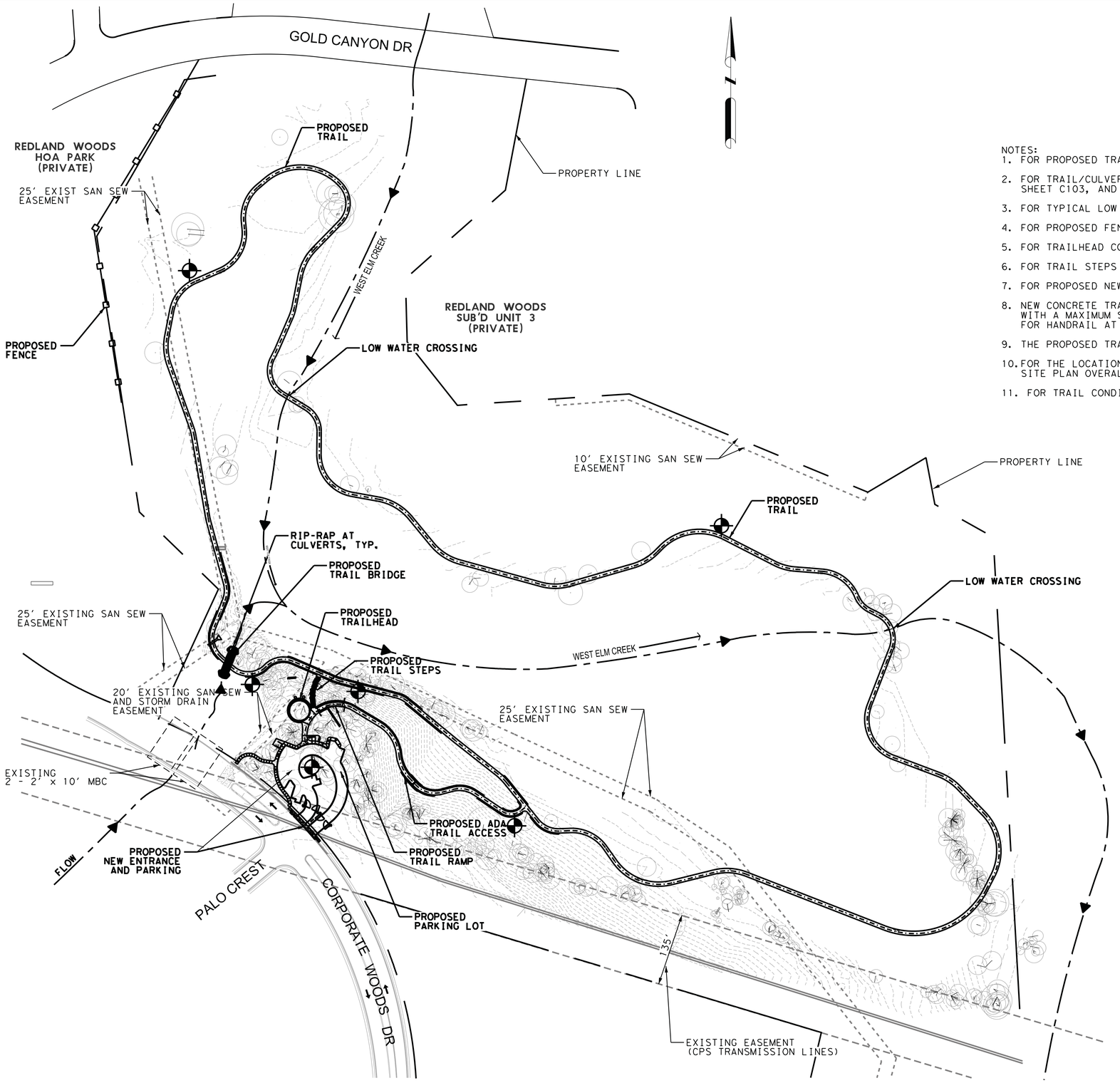

LEGEND:

- PROPERTY LINE
- EXISTING EASEMENT
- TRAFFIC FLOW ARROW
- GEOTECHNICAL BORING (APPROXIMATE)

NOTES:

1. FOR PROPOSED TRAIL BRIDGE, SEE SHEET L200, CONDITION 8.
2. FOR TRAIL/CULVERT BRIDGE ADD ALTERNATIVE #2 SEE CIVIL DETAILS SHEET C103, AND LANDSCAPE CONSTRUCTION DETAILS ON SHEET L205.
3. FOR TYPICAL LOW WATER CROSSING DETAIL, SEE SHEET L202.
4. FOR PROPOSED FENCE CONSTRUCTION DETAILS, SEE SHEET L203 DETAIL 6.
5. FOR TRAILHEAD CONSTRUCTION DETAIL SECTION, SEE SHEET L204, DETAIL 1.
6. FOR TRAIL STEPS CONSTRUCTION DETAIL, SEE SHEET L201, DETAIL 3.
7. FOR PROPOSED NEW ENTRANCE AND PARKING LAYOUT, REFER TO SHEET C100.
8. NEW CONCRETE TRAIL RAMP HAS A 5% TO 8% RUNNING SLOPE (TYPICAL), WITH A MAXIMUM SEGMENT LENGTH OF 50 FEET. FOR HANDRAIL AT TRAIL RAMP DETAIL SEE SHEET L201, DETAIL 9.
9. THE PROPOSED TRAIL CROSS SLOPE SHALL NOT BE STEEPER THAN 1:48 OR 2%.
10. FOR THE LOCATION OF THE DIFFERENT TRAIL CONDITIONS REFER TO LANDSCAPE SITE PLAN OVERALL AND ENLARGEMENT SHEETS.
11. FOR TRAIL CONDITION DETAILS SEE SHEET L200.

0 50' 100'
SCALE: 1" = 100' H
FULL SCALE

0 100' 200'
SCALE: 1" = 200' H
HALF SCALE

STATE OF TEXAS
CHARLES M. SHINE
62999
11-7-2014

IDC
Planners - Engineers - Program Managers

RIALTO STUDIO
Rialto Studio, Inc.
Landscape Architecture
Land Planning
Site Design
Land Planning 26.34.1030
Site Design 26.34.1030
Land Planning 26.434.7527
P 512.828.1108
F 512.828.1208

Date: Revisions/Submissions

CITY OF SAN ANTONIO
TRANSPORTATION & CAPITAL IMPROVEMENTS

CITY OF SAN ANTONIO
TRANSPORTATION AND CAPITAL IMPROVEMENTS (TCI)
MUNICIPAL PLAZA BUILDING
114 W. Commerce P.O. BOX 839966
San Antonio, Texas 78283-3966
TEL. (210) 207-2879 FAX (210) 207-2197

GOLD CANYON PARK
San Antonio, Texas
Construction Plans

OVERALL PROJECT LAYOUT

G101

Drawn By:	Designed By:
KA	CS

Date: November 06, 2014

Project No. : 422-0300

Filename:

kornmo
10:19:02 AM
11/6/2014
\\ldc-fs28-1\shared\transportation\CDSA\Gold Canyon\CADD\GENERAL\GOLD_OVERLL PROJECT LAYOUT.dgn

GENERAL NOTES

1. ALL CONSTRUCTION SHALL CONFORM TO THE CITY OF SAN ANTONIO STANDARD SPECIFICATIONS FOR CONSTRUCTION JUNE 2008, OR LATEST.
2. NO EXTRA PAYMENT SHALL BE ALLOWED FOR WORK CALLED FOR ON THE PLANS, BUT NOT INCLUDED IN THE BID PROPOSAL. THIS INCIDENTAL WORK WILL BE REQUIRED AND SHALL BE INCLUDED IN THE PAY ITEM TO WHICH IT RELATES.
3. THE CONTRACTOR SHALL PROVIDE ACCESS FOR THE DELIVERY OF MAIL BY THE U.S. POSTAL SERVICE.
4. THE CONTRACTOR SHALL BE RESPONSIBLE FOR RESTORING TO ITS ORIGINAL OR BETTER CONDITION ANY DAMAGE DONE TO EXISTING FENCES, CONCRETE ISLANDS, STREET PAVING, CURBS, SHRUBS, BUSHES OR DRIVEWAYS. (NO SEPARATE PAY ITEM).
5. IT IS THE CONTRACTOR'S RESPONSIBILITY TO SEE THAT ALL SIGNS AND BARRICADES ARE PROPERLY INSTALLED AND MAINTAINED. ALL LOCATIONS AND DISTANCES WILL BE DECIDED UPON IN THE FIELD BY THE CONTRACTOR, USING THE "TEXAS MANUAL ON UNIFORM TRAFFIC CONTROL DEVICES". THE CITY'S CONSTRUCTION INSPECTOR AND TRAFFIC ENGINEERING REPRESENTATIVE WILL ONLY BE RESPONSIBLE TO INSPECT BARRICADES AND SIGNS. IF, IN THE OPINION OF THE TRAFFIC ENGINEERING REPRESENTATIVE AND THE CONSTRUCTION INSPECTOR, THE BARRICADES AND SIGNS DO NOT CONFORM TO ESTABLISHED STANDARDS OR ARE INCORRECTLY PLACED OR ARE INSUFFICIENT IN QUANTITY TO PROTECT THE GENERAL PUBLIC, THE CONSTRUCTION INSPECTOR SHALL HAVE THE OPTION TO STOP OPERATIONS UNTIL SUCH TIME AS THE CONDITIONS ARE CORRECTED.
6. IF THE NEED ARISES, ADDITIONAL BARRICADES AND DIRECTIONAL DEVICES MAY BE ORDERED BY THE TRAFFIC ENGINEERING REPRESENTATIVE AT THE CONTRACTOR'S EXPENSE.
7. DUE TO FEDERAL REGULATIONS TITLE 49, PART 192.171 C.P.S. MUST MAINTAIN ACCESS TO GAS VALVES AT ALL TIMES. THE CONTRACTOR MUST PROTECT AND WORK AROUND ANY GAS VALVES THAT ARE IN THE PROJECT AREA.
8. CONTRACTOR SHALL NOTIFY THE CITY INSPECTOR TWENTY FOUR (24) HOURS PRIOR TO BACKFILL OF ANY UTILITY TRENCHES TO SCHEDULE FOR DENSITY TEST AS REQUIRED.
9. CONTRACTOR SHALL PRESERVE ALL CONSTRUCTION STAKES, MARKS, ETC. IF ANY ARE DESTROYED OR REMOVED BY THE CONTRACTOR OR HIS EMPLOYEES, THEY SHALL BE REPLACED AT THE CONTRACTOR'S EXPENSE.
10. CONTRACTOR SHALL NOTIFY ALL UTILITY COMPANIES PRIOR TO CONSTRUCTION TO DETERMINE THE LOCATION OF EXISTING UTILITIES. CONTRACTOR SHALL NOTIFY THE FOLLOWING AT LEAST FORTY-EIGHT (48) HOURS PRIOR TO EXCAVATION OPERATION:

SAN ANTONIO WATER SYSTEM (SAWS)	233-2010
BEXAR METROPOLITAN WATER DISTRICT (BEXAR MET)	354-6538 / 357-5741
COSA DRAINAGE	207-8048
COSA SIGNAL OPERATIONS	207-7720 / 207-7765
TEXAS STATE WIDE ONE CALL LOCATOR	1-800-344-8377

- CITY PUBLIC SERVICE ENERGY
- TIME WARNER
- AT&T
- MCI

11. THE EXISTENCE AND LOCATION OF UNDERGROUND UTILITIES INDICATED ON THE PLANS ARE TAKEN FROM AVAILABLE RECORDS AND ARE NOT GUARANTEED, BUT SHALL BE INVESTIGATED AND VERIFIED BY THE CONTRACTOR BEFORE STARTING WORK. THE CONTRACTOR SHALL BE HELD RESPONSIBLE FOR ANY DAMAGE TO AND FOR THE MAINTENANCE AND PROTECTION OF THE EXISTING UTILITIES EVEN IF THEY ARE NOT SHOWN ON THE PLANS. LOCATION AND DEPTH OF EXISTING UTILITIES SHOWN HERE ARE APPROXIMATE ONLY. ACTUAL LOCATIONS AND DEPTHS MUST BE VERIFIED BY THE CONTRACTOR PRIOR TO CONSTRUCTION AND HE SHALL BE RESPONSIBLE FOR PROTECTION OF SAME DURING CONSTRUCTION.
12. ALL WASTE MATERIAL SHALL BECOME PROPERTY OF THE CONTRACTOR AND SHALL BE HIS SOLE REPONSIBILITY TO DISPOSE OF THIS MATERIAL OFF THE LIMITS OF THE PROJECT. NO WASTE MATERIAL SHALL BE PLACED IN EXISTING LOWS THAT WILL BLOCK OR ALTER FLOW LIMITS OF EXISTING ARTIFICIAL OR NATURAL DRAINAGE.
13. THE CONTRACTOR SHALL NOT PLACE ANY WASTE MATERIAL IN THE 100-YEAR FLOOD PLAIN WITHOUT FIRST OBTAINING AN APPROVED FLOOD PLAIN DEVELOPMENT PERMIT.
14. THE CONTRACTOR SHALL MAINTAIN ALL ADJOINING STREETS AND TRAVELED ROUTES FREE FROM SPILLED AND /OR TRACKED CONSTRUCTION MATERIALS AND /OR DEBRIS.
15. IF THE CONTRACTOR ENCOUNTERS ANY ARCHAEOLOGICAL DEPOSITS DURING CONSTRUCTION OPERATIONS, THE CONTRACTOR MUST STOP EXCAVATION IMMEDIATELY, CONTACT THE CITY INSPECTOR, AND CALL THE CITY HISTORIC PRESERVATION OFFICE AT 207-7306 OR 207-3327 FOR AN ARCHAEOLOGICAL INVESTIGATION. THE CONTRACTOR CANNOT BEGIN EXCAVATION AGAIN WITHOUT WRITTEN PERMISSION FROM THE CITY.
    IF MORE THAN THREE (3) DAYS ARE REQUIRED FOR INVESTIGATION (NOT INCLUDING HOLIDAY AND WEEKENDS) AND IF THE CONTRACTOR IS UNABLE TO WORK IN OTHER AREAS, THEN THE CONTRACTOR WILL BE ALLOWED TO NEGOTIATE FOR ADDITIONAL CONSTRUCTION TIME UPON WRITTEN REQUEST WITHIN TEN (10) DAYS AFTER THE FIRST NOTICE TO THE CITY OF ARCHAEOLOGICAL INVESTIGATION FOR EACH EVENT.
    IF THE TIME REQUIRED FOR INVESTIGATION IS LESS THAN OR EQUAL TO THREE (3) DAYS FOR EACH EVENT, CONTRACT DURATION WILL NOT BE EXTENDED.
16. IF SUSPECTED CONTAMINATION IS ENCOUNTERED DURING CONSTRUCTION OPERATIONS, C.O.S.A. SHALL BE NOTIFIED IMMEDIATELY WHEN CONTAMINATED SOILS AND /OR GROUNDWATER ARE ENCOUNTERED AT LOCATIONS NOT IDENTIFIED IN THE PLANS. THE NOTIFICATION SHOULD INCLUDE THE STATION NUMBER, TYPE OF CONTAMINATED MEDIA, EVIDENCE OF CONTAMINATION AND MEASURES TAKEN TO CONTAIN THE CONTAMINATED MEDIA AND PREVENT PUBLIC ACCESS. THE CONTAMINATED SOIL AND /OR GROUNDWATER SHALL NOT BE REMOVED FROM THE LOCATION WITHOUT PRIOR C.O.S.A. APPROVAL.
    THE CONTRACTOR MUST STOP THE EXCAVATION IMMEDIATELY AND CONTACT THE C.O.S.A. INSPECTOR. THE CONTRACTOR CANNOT BEGIN EXCAVATION ACTIVITIES WITHOUT WRITTEN PERMISSION FROM THE CITY.
17. CONTRACTOR IS TO INCLUDE A MAILBOX POST BLOCKOUT FOR VACANT LOTS AND ALL RESIDENCES WHICH DO NOT HAVE MAILBOXES AT THE CURB. BLOCKOUTS ARE PROVIDED FOR FUTURE USE BY THE POST OFFICE.
18. CONTRACTOR SHALL NOT REMOVE OR ADJUST ANY VIA FACILITIES. THE CONTRACTOR MUST CONTACT VIA FOURTEEN DAYS PRIOR, FOR THE REMOVAL OF BENCHES, STOP POLES OR ANY OTHER VIA FACILITIES THAT MAY BE PRESENT. PLEASE PROVIDE THIRTY DAYS PRIOR NOTICE FOR SHELTER REMOVAL (TELEPHONE NOS: (210) 362-2155 OR (210) 362-2096). THE CONTRACTOR WILL BE LIABLE FOR ANY DAMAGES TO VIA FACILITIES NOT REMOVED BY VIA. THE CONTRACTOR IS REQUIRED TO REPLACE ALL FLATWORK REMOVED OR DAMAGED IN THE COURSE OF EXECUTING THE CONTRACT UNLESS OTHERWISE NOTED BY VIA. THE CONTRACTOR WILL BE RESPONSIBLE FOR PROTECTING VIA FACILITIES IF ADJACENT TO WORK AREA.

TREE PROTECTION AND PRESERVATION GENERAL NOTES

1. NO UTILITY OR STREET EXCAVATION WORK SHALL BEGIN IN AREAS WHERE TREE PRESERVATION AND TREATMENT MEASURES HAVE NOT BEEN COMPLETED AND APPROVED.
2. TREE PROTECTION FENCING SHALL BE REQUIRED. TREE PROTECTION FENCING SHALL BE INSTALLED, MAINTAINED AND REPAIRED BY THE CONTRACTOR DURING SITE CONSTRUCTION. DURING CONSTRUCTION ACTIVITY, AT LEAST A SIX-INCH LAYER OF COARSE MULCH SHALL BE PLACED AND MAINTAINED OVER THE ROOT PROTECTION ZONE (NO SEPARATE PAY ITEM).
3. THE CONTRACTOR SHALL AVOID CUTTING ROOTS LARGER THAN ONE INCH IN DIAMETER WHEN EXCAVATING NEAR EXISTING TREES. EXCAVATION IN THE VICINITY OF TREES SHALL PROCEED WITH CAUTION. THE CONTRACTOR SHALL CONTACT THE CITY INSPECTOR FOR GUIDANCE.
4. ROOTS WILL BE CUT WITH A ROCK SAW OR BY HAND, NOT BY AN EXCAVATOR OR OTHER ROAD CONSTRUCTION EQUIPMENT.
5. ALL CURB AND SIDEWALK WORK SHALL USE ALTERNATIVE CONSTRUCTION METHODS TO MINIMIZE EXTENSIVE ROOT DAMAGE TO TREES (REFER TO DETAILS).
6. EXPOSED ROOTS SHALL BE COVERED AT THE END OF THE DAY USING TECHNIQUES SUCH AS COVERING WITH SOIL, MULCH, OR WET BURLAP.
7. NO EQUIPMENT, VEHICLES OR MATERIALS SHALL OPERATE OR BE STORED WITHIN THE ROOT PROTECTION ZONE OF ANY TREE NEAR THE PROJECT. ROOT PROTECTION ZONE IS 1 FOOT OF RADIUS PER INCH OF TREE'S DIAMETER. A 10-INCH DIAMETER TREE WOULD HAVE A 10 FOOT RADIUS ROOT PROTECTION ZONE AROUND THE TREE. ROOTS OR BRANCHES IN CONFLICT WITH THE CONSTRUCTION SHALL BE CUT CLEANLY ACCORDING TO PROPER PRUNING METHODS. OAK WOUNDS SHALL BE PAINTED OVER WITHIN 30 MINUTES TO PREVENT OAK WILT.
8. SAPLINGS, SHRUBS OR BUSHES TO BE CLEARED FROM THE PROTECTED ROOT ZONE AREA OF A LARGE TREE SHALL BE REMOVED BY HAND AS DESIGNATED BY THE INSPECTOR.
9. NO WIRES, NAILS OR OTHER MATERIAL MAY BE ATTACHED TO PROTECTED TREES.
10. TREES, TREE LIMBS, BUSHES AND SHRUBS LOCATED IN THE CITY STREET OR ALLEY RIGHT-OF-WAY OR PERMANENT EASEMENTS WHICH INTERFERE WITH PROPOSED CONSTRUCTION ACTIVITIES SHALL BE PROPERLY PRUNED FOLLOWING THE ANSI A-300 STANDARDS FOR PRUNING. ALL TREE PRUNING SHALL BE COMPLETED BY A CITY OF SAN ANTONIO TREE MAINTENANCE LICENSED CONTRACTOR (ARTICLE 21-171, CITY CODE) ONLY AFTER APPROVAL FROM THE CAPITAL PROJECTS MANAGEMENT THROUGH THE INSPECTOR.
11. NO EXCESSIVE TREE TRIMMING WILL BE PERMITTED.
12. ALL DEBRIS GENERATED BY THE PRUNING AND TRIMMING OF THE TREES AND /OR BUSHES SHALL BECOME THE PROPERTY OF THE CONTRACTOR AND SHALL BE DISPOSED OF PROPERLY (NO SEPARATE PAY ITEM).
13. TREES MUST BE MAINTAINED IN GOOD HEALTH THROUGHOUT THE CONSTRUCTION PROCESS. MAINTENANCE MAY INCLUDE, BUT NOT LIMITED TO: WATERING THE ROOT PROTECTION ZONE, WASHING FOLIAGE, FERTILIZATION, PRUNING, ADDITIONAL MULCH APPLICATIONS AND OTHER MAINTENANCE AS NEEDED ON THE PROJECT.
14. ANY TREE REMOVAL SHALL BE APPROVED BY THE CITY ARBORIST. (207-0278)
15. TREES WHICH ARE DAMAGED OR LOST DUE TO THE CONTRACTOR'S NEGLIGENCE DURING CONSTRUCTION SHALL BE MITIGATED TO THE CITY'S SATISFACTION.
16. TREE PLANTING FOR MITIGATION OR ENHANCEMENT: ALL PLANTED TREES SHALL BE MAINTAINED IN A HEALTHY CONDITION AT ALL TIMES. THIS INCLUDES IRRIGATION, FERTILIZING, PRUNING AND OTHER MAINTENANCE AS NEEDED ON THE PROJECT. TREES THAT DIE WITHIN TWELVE (12) MONTHS SHALL BE REPLACED WITH A TREE OF EQUAL SIZE AND SPECIES.

ACCESSIBILITY REQUIREMENTS

1. THE CONTRACTOR SHALL PROVIDE AND MAINTAIN VEHICULAR AND PEDESTRIAN ACCESS AT ALL TIMES TO LOCAL RESIDENCES AND BUSINESSES.
2. WHEN THE WORK REQUIRES THE EXCAVATION OF THE STREET AND THE REMOVAL OF THE EXISTING DRIVEWAY APPROACHES AND SIDEWALKS, THE CONTRACTOR SHALL BE RESPONSIBLE FOR PROVIDING TEMPORARY ALL-WEATHER ACCESS TO THE BUSINESSES AND RESIDENCES. THE TEMPORARY DRIVEWAY APPROACHES SHALL BE CONSTRUCTED WITH FLEXIBLE BASE OR GRAVEL MATERIAL AT NO SEPARATE COST TO THE CITY.
3. PRIOR TO INITIATING THE CONSTRUCTION OF NEW DRIVEWAY APPROACHES, THE CONTRACTOR SHALL GIVE ADVANCE WARNING IN PERSON, OR IN WRITING, OF AT LEAST 48 HOURS TO EACH RESIDENCE THAT WILL BE IMMEDIATELY AFFECTED, SO THAT ALTERNATE PLANS MAY BE MADE BY THE RESIDENTS.
4. FOR BUSINESSES WITH MORE THAN ONE DRIVEWAY, AT LEAST ONE DRIVEWAY SHALL REMAIN OPEN WHILE THE OTHER NEW DRIVEWAY APPROACHES ARE CONSTRUCTED. FOR BUSINESSES WITH ONLY ONE DRIVEWAY, THE NEW DRIVEWAY APPROACH SHALL BE CONSTRUCTED IN HALF WIDTHS, UNLESS A TEMPORARY ASPHALT DRIVEWAY IS FIRST INSTALLED AT NO SEPARATE COST TO THE CITY.

DECEMBER 2009

CITY OF SAN ANTONIO
CAPITAL IMPROVEMENTS MANAGEMENT SERVICES DEPARTMENT

CITY OF SAN ANTONIO
GENERAL NOTES

% SUBMITTAL	PROJECT NO.:	G102
DRWN. BY:	DSGN. BY: / CHKD. BY:	

THE FOLLOWING CHANGES ARE MADE TO THE CITY OF SAN ANTONIO'S GENERAL NOTES:

DELETED NOTES

1. DELETE NOTE NO. 17 – CONTRACTOR IS TO INCLUDE A MAILBOX POST BLOCKOUT FOR VACANT LOTS AND ALL RESIDENCES WHICH DO NOT HAVE MAILBOXES AT THE CURB. BLOCKOUTS ARE PROVIDED FOR FUTURE USE BY THE POST OFFICE.

2. DELETE NOTE NO. 18 – CONTRACTOR SHALL NOT REMOVE OR ADJUST ANY VIA FACILITIES. THE CONTRACTOR MUST CONTACT VIA FOURTEEN DAYS PRIOR, FOR THE REMOVAL OF BENCHES, STOP POLES OR ANY OTHER VIA FACILITIES THAT MAY BE PRESENT. PLEASE PROVIDE THIRTY DAYS PRIOR NOTICE FOR SHELTER REMOVAL (TELEPHONE NOS: (210) 362–2155 OR (210) 362–2096). THE CONTRACT– OR WILL BE LIABLE FOR ANY DAMAGES TO VIA FACILITIES NOT REMOVED BY VIA. THE CONTRACTOR IS REQUIRED TO REPLACE ALL FLATWORK REMOVED OR DAMAGED IN THE COURSE OF EXECUTING THE CONTRACT UNLESS OTHERWISE NOTED BY VIA. THE CONTRACTOR WILL BE RESPONSIBLE FOR PROTECTING VIA FACILITIES IF ADJACENT TO WORK AREA.

3. DELETE NOTE NO. 4 – FOR BUSINESSES WITH MORE THAN ONE DRIVEWAY, AT LEAST ONE DRIVEWAY SHALL REMAIN OPEN WHILE THE OTHER NEW DRIVEWAY APPROACHES ARE CONSTRUCTED. FOR BUSINESSES WITH ONLY ONE DRIVEWAY, THE NEW DRIVEWAY APPROACH SHALL BE CONSTRUCTED IN HALF WIDTHS, UNLESS A TEMPORARY ASPHALT DRIVEWAY IS FIRST INSTALLED AT NO SEPARATE COST TO THE CITY.

ADDED NOTES

1. SIDEWALK DRAINS WILL NOT BE PAID FOR DIRECTLY BUT WILL BE INCLUDED IN THE PRICE FOR ITEM 502, SIDEWALKS.

2. PREPARING ROW WILL INCLUDE CLEARING OF VEGETATION REQUIRED FOR THE CONSTRUCTION OF THE TRAIL, SIDEWALKS, STAIRS, AND PARKING LOT AREAS.

3. FLEXIBLE BASE FOR THE TRAIL AND SIDEWALK WILL BE TYPE E AS SHOWN IN THE PLANS.

IDC, INC.
8632 FREDERICKSBURG RD., SUITE 203
SAN ANTONIO,TEXAS 78240
(210) 448–1800

CITY OF SAN ANTONIO
CAPITAL IMPROVEMENTS MANAGEMENT SERVICES DEPARTMENT

PROJECT TITLE

SUPPLEMENTAL GENERAL NOTES

_____% SUBMITTAL	PROJECT NO.:_____		G103
DRWN. BY:_____	DSGN. BY:_____	CHKD. BY:_____	

PROJECT SUMMARY

ITEM	DESCRIPTION	UNIT	QUANTITY
SECTION 1 - EARTHWORK			
	EROSION CONTROL (WATER QUALITY)		
164.1	BROADCAST SEEDING	SY	6400
166.1	FERTILIZER (MONTHLY)	AC	8.1
168.1	VEGETATIVE WATERING (WEEKLY) (6 MONTHS)	MG	520
SECTION 2 - BASE AND SURFACE COURSES			
	PARKING LOT		
103.3	REMOVE SIDEWALK & DRIVEWAYS (< 1000 SF)	SF	192
200.1	FLEXIBLE BASE (8" COMPACTED DEPTH)	SY	1412.5
205.4	HOT MIX ASPHALTIC BASE, TYPE D (2" COMP DEPTH)	SY	1130
SECTION 3- CONCRETE AND CONCRETE STRUCTURES			
	Trail - Storm Drain Crossing (south)		
307.4	CONCRETE STRUCTURES (MISC -RETG WALLS) (3'-5')	SF	2568
307.4	CONCRETE STRUCTURES (MISC-RETG WALLS) (1'-2.5')	SF	1447.25
307.5	CONCRETE STRUCTURES (MISCELLANEOUS)	EA	2
SECTION 4 - STORM SEWERS			
	Culvert Bridge - Add Alternative #2		
401.1	REINFORCED CONCRETE PIPE (CLASS III) (48" DIA)	LF	20
401.1	REINFORCED CONCRETE PIPE (CLASS III) (54" DIA)	LF	10
404.1	CORREGATED METAL PIPE (GALV STEEL) (24")	LF	12
412.1	CEMENT STABILIZED SAND	CY	30
SECTION 5 - INCIDENTAL CONSTRUCTION			
	MISCELLANEOUS WORK FOR PARKING LOT AREA		
200.1	FLEXIBLE BASE (2" COMPACTED DEPTH)	LF	379
500.1	CONCRETE CURBING (<1000 LF)	SY	850
502.1	CONCRETE SIDEWALKS (<150 SY)	SY	379
503.2	PORTLAND CEMENT CONCRETE DRIVEWAYS - COMMERCIAL	SY	70
505.1	CONCRETE RIPRAP (4" THICK)		27.8
	WHEEL STOPS		30
	TRAFFIC CONTROL		
530.1	BARRICADES, SIGNS, AND TRAFFIC HANDLING	LS	1
531.3	R1-1 STOP (30") (HIGH DENSITY)	EA	1
535.17	BICYCLE RIDER SYMBOL	EA	1
536.2	4" WIDE WHITE LINE	LF	228
539.13	STRAIGHT WHITE ARROW	EA	1
	SWPPP		
540.1	ROCK FILTER DAM (TYPE 4)	LF	40
540.6	CONSTRUCTION EXITS (INSTALL/REMOVE)	SY	155
540.8	SANDBAGS FOR EROSION CONTROL FENCE (6")	LF	10
540.9	TEMPORARY SEDIMENT CONTROL FENCE	LF	5765
540.10	CURB INLET GRAVEL FILTERS	LF	25
	TRAILS		
107.1	EMBANKMENT (TYPE B, C, OR D)	EA	200
200.1	FLEXIBLE BASE (4" COMPACTED DEPTH)	SY	5179
502.1	CONCRETE SIDEWALKS (1000 SY < X,10000 SY) (2500 PSI)	EA	5179
502.1	CONCRETE SIDEWALKS (150 SY < X< 1000 SY) (3000 PSI)	SF	130
522.1	SIDEWALK PIPE RAILING (HANDRAIL)	SF	144
	GRADE BEAMS	LF	614
	FINE GRADE	SF	46610
	BULL ROCK	LF	22
	STONE BENCHES	EA	2

ITEM	DESCRIPTION	UNIT	QUANTITY
SECTION 6- LANDSCAPE ARCHITECTURE			
	GATES		
507.5	GATES - VEHICULAR	OPEN	4
	TOILET ENCLOSURE		
	DRILL ANCHORS	EA	4
	STEEL FABRICATION	EA	1
	PRIME & PAINT	LS	1
	TRAILHEAD		
	CLEARING	LS	1
	SUBGRADE PREP	SY	170
	GRADED BASE (8" compacted)	SY	119
	CONCRETE FOOTING	SY	44
	MASONRY WALL	SF	728
307.4	CONCRETE STRUCTURES (MISC-RETG WALLS) (1'-2')(Fill)	SF	135
	STONE BENCHES	EA	4
	TRASH RECEPTACLES (installation only)	EA	2
	PAVERS ON SAND	SF	1070
	TRAIL STAIRS		
413.1	FLOWABLE FILL (LOW STRENGTH)	CY	9.5
	SUBGRADE PREP	EA	57
	STAKES	LF	60
	HANDRAIL (painted)	LF	132
	SALVAGE & PLACE BOULDERS	EA	1
	SIGNAGE		
	WAYFINDING	EA	10
	PARK ENTRANCE SIGN (installation only)	EA	1
	INTERPRETIVE	EA	2
	PLANTING		
	SEED MIX	SF	100000
	FENCE (STEEL)		
	CONCRETE FOOTINGS	EA	73
	FENCE (FABRICATE AND INSTALL ON SITE)	LF	720
	PRIME & PAINT	LS	1

ADD ALTERNATIVES

ITEM	DESCRIPTION	UNIT	QUANTITY
	ADD/ALTERNATE #1		
	EXERCISE EQUIPMENT (w/bark mulch base)	LS	1
	ADD/ALTERNATE #2		
	BRIDGE CULVERT		
307.1	CONCRETE STRUCTURE (HEADWALLS OR OUTFALL STRUCTURES)	CY	36
412.1	CEMENT STABILIZED SAND	CY	25
522.1	SIDEWALK PIPE RAILING	LF	132
	ADD/ALTERNATE #3		
	UTILITY SERVICE		
822	LONG YARD PIPING	LF	120
824	NEW 1" LONG SERVICE (BORE OR TUNNELING)	EA	1
833	NEW METER AND METER BOX INSTALLATION	EA	1
841	HYDROSTATIC TESTING	EA	1
	SAWS IMPACT FEES	EA	1
	WATER FOUNTAIN		
	VALVE	EA	1
	PLUMBING	LS	1
	FOUNTAIN	EA	1
	BRICK PAVERS (on sand base)	SF	13
	DRY WELL	LS	1

CHARLES M. SHINE
62999
CENSED
11-7-2014

IDC
Planners - Engineers - Program Managers

RIALTO STUDIO
Rialto Studio, Inc.
Landscape Architecture
2100 Broadway, Ste. 100
San Antonio, TX 78215
P 210.828.1200
F 210.828.1208

Date: Revisions/Submissions

CITY OF SAN ANTONIO
TRANSPORTATION & CAPITAL IMPROVEMENTS

CITY OF SAN ANTONIO
TRANSPORTATION AND CAPITAL IMPROVEMENTS (TCI)
MUNICIPAL PLAZA BUILDING
114 W. Commerce P.O. BOX 839966
San Antonio, Texas 78283-3966
TEL. (210) 207-2879 FAX (210) 207-2197

GOLD CANYON PARK
San Antonio, Texas
Construction Plans
OVERALL PROJECT SUMMARY

G104

Drawn By:	Designed By:
KA	CS

Date: November 07, 2014
Project No. : 422-0300
Filename:

kcremo
3:41:09 PM
11/7/2014
\\ldcs08-1\sanantonio\transportation\CDSA\Gold Canyon\CADD\GENERAL\GOLD_OVERALL PROJECT SUMMARY.dgn

LEGEND AND CANOPY CALCULATIONS

EXISTING TREE CANOPY TO BE REMOVED AT 100% DENSITY

EXISTING TREE CANOPY TO BE REMOVED AT 50% DENSITY

UPLAND
EXISTING TREE CANOPY PRESERVED

UPLAND AREAS:

TOTAL CANOPY (100%)	**7.52 ac**
MIN. PRESERVATION REQD. (40%)	**3.01 ac**
CANOPY PRESERVED (88.3%)	**6.64 ac**
OVER/UNDER	**3.63 ac OVER**

UPLAND TREE INVENTORY

Tag #	Species	Heritage 3:1 Not Preserved	Heritage 3:1 Preserved	Heritage 1:1 Not Preserved	Heritage 1:1 Preserved	Action to be taken
3166	Ash Juniper				27	Protect
3221	Ash Juniper				33	Protect
3234	Ash Juniper				27	Protect
3553	Ash Juniper				25	Protect
3556	Ash Juniper				24	Protect
Sub. Tot. Inches=		0	0	0	136	
Total inches by category=			0		136	
Preservation percentage=		Heritage Preservation			100%	
Mitigation required (Commercial) =						
Mitigation required (Residential) =		Heritage Mitigation (inches)			none	

No category to fall below 20% preservation;
Preserved- Tree to remain that meets root protection zone requirements desc
Mitigation 1:1 for significant trees below minimum preservation requirements;
** Small species: Condalia, Redbud, Tx. Mountain Laurel, Tx. Persimmon, Hawthorn, Poss*
*** Ashe Juniper, Huisache, Mesquite, Arizona Ash, Hackberry protected at 10" dbh and r*
**** Mitigation Trees: Unprotected-sized trees to be used for mitigation calculations; subtr*

RIPARIAN BUFER E.S.A.
EXISTING TREE CANOPY

RIPARIAN BUFFER E.S.A.:

TOTAL CANOPY (100%)	**6.12 ac**
MIN. PRESERVATION REQD. (80%)	**4.90 ac**
CANOPY PRESERVED (92.8%)	**5.68 ac**
OVER/UNDER	**0.78 ac OVER**

E.S.A. (RIPARIAN BARRIER) TREE INVENTORY

Tag #	Species	Heritage 3:1 Not Preserved	Heritage 3:1 Preserved	Heritage 1:1 Not Preserved	Heritage 1:1 Preserved	Action to be taken
Sub. Tot. Inches=		0	0	0	0	
			0		0	
Total inches by category=						
Preservation percentage=		Heritage Preservation			N/A	
Mitigation required (Commercial) =						
Mitigation required (Residential) =		Heritage Mitigation (inches)			none	

No category to fall below 20% preservation;
Preserved- Tree to remain that meets root protection zone requirements desc
Mitigation 1:1 for significant trees below minimum preservation requirements;
** Small species: Condalia, Redbud, Tx. Mountain Laurel, Tx. Persimmon, Hawthorn, Poss*
*** Ashe Juniper, Huisache, Mesquite, Arizona Ash, Hackberry protected at 10" dbh and r*
**** Mitigation Trees: Unprotected-sized trees to be used for mitigation calculations; subtr*

STEEP SLOPE E.S.A.
EXISTING TREE CANOPY

STEEP SLOPE E.S.A.:

TOTAL CANOPY (100%)	**1.95 ac**
MIN. PRESERVATION REQD. (80%)	**1.56 ac**
CANOPY PRESERVED (91.3%)	**1.78 ac**
OVER/UNDER	**0.22 ac OVER**

E.S.A. (STEEP SLOPE) TREE INVENTORY

Tag #	Species	Heritage 3:1 Not Preserved	Heritage 3:1 Preserved	Heritage 1:1 Not Preserved	Heritage 1:1 Preserved	Action to be taken
3558	Ash Juniper				26	Protect
3564	Oak		38			Protect
3565	Ash Juniper				27	Protect
3601	Oak		25			Protect
Sub. Tot. Inches=		0	63	0	53	
			63		53	
Total inches by category=						
Preservation percentage=		Heritage Preservation			100%	
Mitigation required (Commercial) =						
Mitigation required (Residential) =		Heritage Mitigation (inches)			none	

No category to fall below 20% preservation;
Preserved- Tree to remain that meets root protection zone requirements desc
Mitigation 1:1 for significant trees below minimum preservation requirements;
** Small species: Condalia, Redbud, Tx. Mountain Laurel, Tx. Persimmon, Hawthorn, Poss*
*** Ashe Juniper, Huisache, Mesquite, Arizona Ash, Hackberry protected at 10" dbh and r*
**** Mitigation Trees: Unprotected-sized trees to be used for mitigation calculations; subtr*

1% CHANCE FLOODPLAIN
EXISTING TREE CANOPY

1% CHANCE FLOODPLAIN:

TOTAL CANOPY (100%)	**27.24 ac**
MIN. PRESERVATION REQD. (80%)	**21.79 ac**
CANOPY PRESERVED (95.0%)	**25.88 ac**
OVER/UNDER	**4.09 ac OVER**

1% CHANCE FLOODPLAIN TREE INVENTORY

Tag #	Species	Heritage 3:1 Not Preserved	Heritage 3:1 Preserved	Heritage 1:1 Not Preserved	Heritage 1:1 Preserved	Action to be taken
1318	Oak		30			Protect
Sub. Tot. Inches=		0	30	0	0	
			30		0	
Total inches by category=						
Preservation percentage=		Heritage Preservation			100%	
Mitigation required (Commercial) =						
Mitigation required (Residential) =		Heritage Mitigation (inches)			none	

No category to fall below 20% preservation;
Preserved- Tree to remain that meets root protection zone requirements desc
Mitigation 1:1 for significant trees below minimum preservation requirements;
** Small species: Condalia, Redbud, Tx. Mountain Laurel, Tx. Persimmon, Hawthorn, Poss*
*** Ashe Juniper, Huisache, Mesquite, Arizona Ash, Hackberry protected at 10" dbh and r*
**** Mitigation Trees: Unprotected-sized trees to be used for mitigation calculations; subtr*

CANOPY MITIGATION IS NOT REQUIRED

REGISTERED LANDSCAPE ARCHITECT
GARY R. PRIEST
622
STATE OF TEXAS
11/7/2014

IDC
Planners · Engineers · Program Managers

RIALTO STUDIO
Rialto Studio, Inc.
Landscape Architecture
2420 Broadway, Suite 105
San Antonio, Texas 78215
P: 210.828.1155
F: 210.828.1399

Date:	Revisions/Submissions

CITY OF SAN ANTONIO
TRANSPORTATION & CAPITAL IMPROVEMENTS

CITY OF SAN ANTONIO
CAPITAL IMPROVEMENTS
MANAGEMENT SERVICES DIVISION
MUNICIPAL PLAZA BUILDING
114 W. Commerce P.O. BOX 839966
San Antonio, Texas 78283-3966
TEL. (210) 207-2879 FAX (210) 207-2197

GOLD CANYON PARK
San Antonio, Texas
Construction Plan Set

TREE STAND DELINEATION

TP100

Drawn By:	Designed By:
SFA	SFA

Date: November 7, 2014
Project No. : RSI-1306
Filename:

LEGEND

EXISTING TREE CANOPY TO BE REMOVED AT 100% DENSITY: REFER TO SHEET TP102

EXISTING TREE CANOPY TO BE REMOVED AT UP TO 50% DENSITY:
INCLUDES LIMB REMOVAL AND/OR COMPLETE TREE REMOVAL. REMAINING TREES TO BE PRESERVED SHALL BE PROTECTED BY TREE TRUNK PROTECTION OR ROOT PROTECTION FENCING PER DETAILS SHEET TP103. LANDSCAPE ARCHITECT WILL PROVIDE FIELD DIRECTION FOR TREE PROTECTION, TREE PRUNING, AND TREE REMOVAL.

PROPOSED TRAIL

PROJECT STAGING WILL OCCUR AT THE PROPOSED PARKING AREA, REFER TO SHEET TP102.

TREE PROTECTION NOTES

1. ALL TREES SHALL REMAIN UNLESS NOTED ON THE PLANS.
2. NO SITE PREPARATION WORK SHALL BEGIN IN AREAS WHERE TREE PRESERVATION AND TREATMENT MEASURES HAVE NOT BEEN COMPLETED. CALL 1-210-207-2222 TO SCHEDULE TREE PROTECTION FENCING INSPECTION.
3. ALL EXISTING TREES DENOTED TO REMAIN SHALL BE PROTECTED AT THE ROOT PROTECTION ZONE(RPZ). THE RPZ SHALL BE DETERMINED BY TREE SIZE (RECOMMENDED 12" RADIUS FROM TRUNK FOR EVERY 1" IN DIAMETER OF TRUNK AT 4.5' FROM GROUND) WITH A MINIMUM OF HALF THE ROOT PROTECTION ZONE RADIUS.
4. AN ORANGE MESH BARRIER DELINEATING THE RPZ SHALL BE ERECTED AND MAINTAINED BY THE CONTRACTOR UNTIL CONSTRUCTION IS COMPLETED.
5. RPZ SHALL BE SUSTAINED IN A NATURAL STATE AND SHALL BE FREE FROM VEHICULAR OR MECHANICAL TRAFFIC.
6. THE RPZ SHALL BE COVERED WITH MULCH AND BE MAINTAINED BY GENERAL CONTRACTOR DURING CONSTRUCTION PHASE TO REDUCE MOISTURE STRESS.
7. DURING CONSTRUCTION, NO EXCESS SOIL, ADDITIONAL FILL MATERIAL, EQUIPMENT, LIQUIDS, OR CONSTRUCTION DEBRIS SHALL BE PLACED INSIDE THE PROTECTION BARRIER, NOR SHALL ANY SOIL BE REMOVED FROM WITHIN THE BARRIER.
8. ANY DAMAGE DONE TO EXISTING TREE CROWNS OR ROOT SYSTEMS SHALL BE CUT CLEANLY IMMEDIATELY AFTER INJURY. ALL WOUNDS TO OAKS SHALL BE PAINTED WITH PRUNING PAINT WITHIN 30 MINUTES AFTER DAMAGE. ROOTS EXPOSED DURING CONSTRUCTION OPERATIONS WILL BE CUT CLEANLY.
9. THE PROPOSED FINISH GRADE AND ELEVATION OF LAND WITHIN THE RPZ OF ANY TREE TO BE PRESERVED SHALL NOT BE RAISED OR LOWERED MORE THAN THREE INCHES. WELLING AND RETAINING METHODS ARE ALLOWED OUTSIDE THE RPZ.
10. THE RPZ SHALL REMAIN PERVIOUS, I.E. GROUNDCOVER OR TURF AT COMPLETION OF LANDSCAPE INSTALLATION.
11. THE ASSOCIATED TREE PROTECTION DETAIL COMPLIES WITH THE MINIMUM TREE PROTECTION GUIDELINES FROM THE CITY OF SAN ANTONIO. WHERE POSSIBLE, PROVIDE FENCE TO TREE DRIP LINE OR GROUP TREES IN FENCE PERIMETER TO PROVIDE INCREASED PROTECTION.
12. NO WORK SHALL BEGIN IN AREAS WHERE TREE PRESERVATION AND TREATMENT MEASURES HAVE NOT BEEN COMPLETED AND APPROVED.
13. TREES WHICH ARE DAMAGED OR LOST DUE TO THE CONTRACTOR'S NEGLIGENCE DURING CONSTRUCTION SHALL BE MITIGATED PER UDC 35-523 (f) MITIGATION.
14. TREES MUST BE MAINTAINED IN GOOD HEALTH THROUGHOUT THE CONSTRUCTION PROCESS. MAINTENANCE MAY INCLUDE BUT IS NOT LIMITED TO: WATERING THE ROOT PROTECTION ZONE, WASHING FOLIAGE, FERTILIZATION, PRUNING, ADDITIONAL MULCH APPLICATIONS AND OTHER MAINTENANCE AS NEEDED ON THE PROJECT.
15. ROOTS SHALL BE CUT WITH A ROCK SAW OR BY HAND, NOT BY AN EXCAVATOR OR OTHER ROAD CONSTRUCTION EQUIPMENT.

REGISTERED LANDSCAPE ARCHITECT
MARK PETERSON
622
STATE OF TEXAS
11/7/2014

IDC
Planners · Engineers · Program Managers

RIALTO STUDIO
Rialto Studio, Inc.
Landscape Architecture
2425 Broadway, Suite 105
San Antonio, Texas 78215
P: 210.828.1100
F: 210.828.1399

Date:	Revisions/Submissions

CITY OF SAN ANTONIO
TRANSPORTATION & CAPITAL IMPROVEMENTS

CITY OF SAN ANTONIO
CAPITAL IMPROVEMENTS
MANAGEMENT SERVICES DIVISION
MUNICIPAL PLAZA BUILDING
114 W. Commerce P.O. BOX 839966
San Antonio, Texas 78283-3966
TEL. (210) 207-2879 FAX (210) 207-2197

GOLD CANYON PARK
San Antonio, Texas
Construction Plan Set
TREE PROTECTION PLAN
OVERALL

TP101

Drawn By:	Designed By:
SFA	SFA

Date:
November 7, 2014

Project No. :
RSI-1306

Filename:

LEGEND

- TREES TO BE SAVED
- TREES TO BE REMOVED
- ROOT PROTECTION ZONE FENCE
- 2 X 4 TRUNK PROTECTION

SPECIFIC TREES TO BE REMOVED BY TREE ID TAG (THIS SHEET ONLY, DOES NOT PRECLUDE SELECTIVE CLEARING/ REMOVAL AS INDICATED ON SHEET TP101).

TAG #	Cal. DBH	Species	TAG #	Cal. DBH	Species
3316	18"	Ash Juniper	3415	8"	Oak
3318	12"	Oak	3416	12"	Oak
3321	7"	Oak	3419	11"	Ash Juniper
3323	12"	Ash Juniper	3420	19"	Ash Juniper
3324	11"	Ash Juniper	3423	16"	Ash Juniper
3325	10"	Oak	3424	14"	Ash Juniper
3326	14"	Oak	3425	9"	Ash Juniper
3327	8"	Oak	3427	23"	Ash Juniper
3332	10"	Oak	3428	10"	Ash Juniper
3333	19"	Ash Juniper	3430	14"	Ash Juniper
3341	6"	Oak	3433	9"	Ash Juniper
3350	12"	Ash Juniper	3444	17"	Ash Juniper
3353	17"	Ash Juniper	3447	9"	Ash Juniper
3374	10"	Ash Juniper	3452	7"	Ash Juniper
3375	11"	Ash Juniper	3463	17"	Ash Juniper
3379	10"	Oak	3473	17"	Ash Juniper
3386	11"	Ash Juniper	3486	10"	Ash Juniper
3404	10"	Oak	3496	16"	Ash Juniper
3405	9"	Oak	3497	12"	Ash Juniper
3406	15"	Ash Juniper	3509	8"	Ash Juniper
3410	6"	Oak	3597	7"	Oak
3411	6"	Oak	3598	12"	Oak
3413	11"	Oak	3599	10"	Ash Juniper
3414	7"	Oak	3649	17"	Oak

Note: List includes only TP102 trees to be removed. Refer to Sheet TP101 for trees to be removed along remainder of trail.

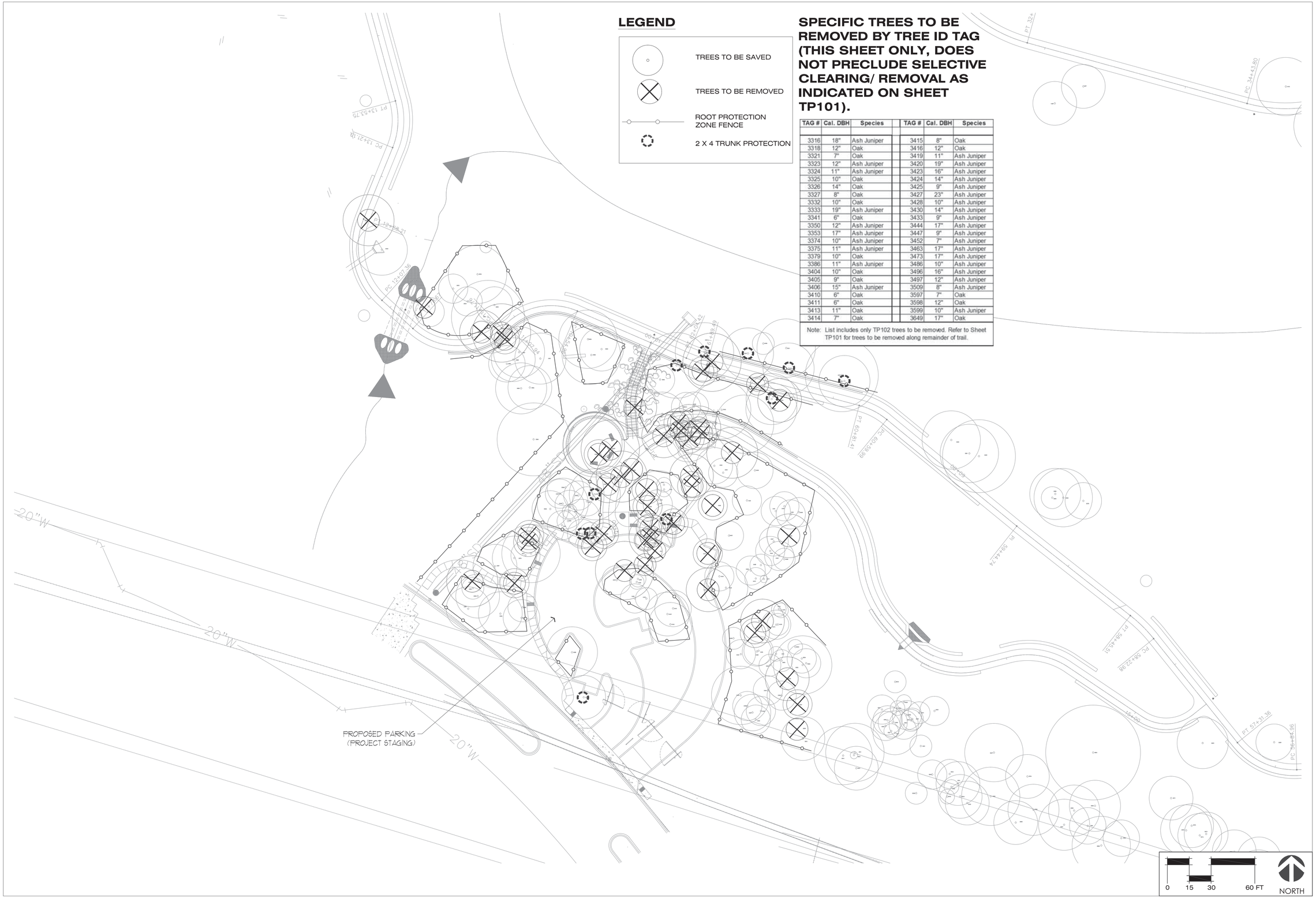

REGISTERED LANDSCAPE ARCHITECT
STATE OF TEXAS
622
11/7/2014

IDC
Planners · Engineers · Program Managers

RIALTO STUDIO
Rialto Studio, Inc.
Landscape Architecture
2420 Broadway, Suite 105
San Antonio, Texas 78215
p 210.828.1155
f 210.828.1399

Date:	Revisions/Submissions

CITY OF SAN ANTONIO
TRANSPORTATION & CAPITAL IMPROVEMENTS

CITY OF SAN ANTONIO
CAPITAL IMPROVEMENTS
MANAGEMENT SERVICES DIVISION
MUNICIPAL PLAZA BUILDING
114 W. Commerce P.O. BOX 839966
San Antonio, Texas 78283-3966
TEL. (210) 207-2879 FAX (210) 207-2197

GOLD CANYON PARK
San Antonio, Texas
Construction Plan Set

TREE PROTECTION PLAN
ENLARGEMENT

TP102

Drawn By:	Designed By:
SFA	SFA

Date:
November 7, 2014

Project No. :
RSI-1306

Filename:

NOTE: THE DRAWING BELOW DETAILS COMPLIANCE WITH THE MINIMUM TREE PROTECTION GUIDELINES FROM THE CITY OF SAN ANTONIO. WHERE POSSIBLE, EXTEND FENCE TO TREE DRIP LINE. IN CASES WHERE TREES ARE CLOSELY-SPACED, A COMMON FENCE PERIMETER MAY BE PROVIDED. REFER TO SPECIFICATION SECTION Ø2122 FOR COMPLETE TREE PROTECTION NOTES.

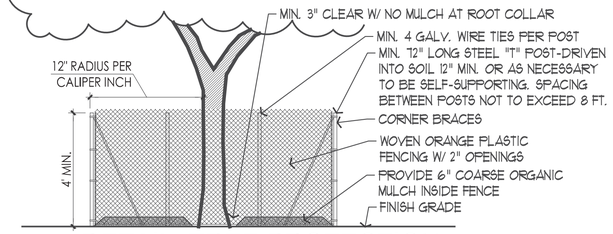

1 DETAIL: TREE PROTECTION

SCALE: 1/4" = 1'-0"

NOTES:
1. PROTECTIVE LUMBER SHALL NOT BE DIRECTLY NAILED TO THE TREE.

2. 2X4'S SHALL BE HELD SECURELY IN PLACE WITH 1Ø GAUGE WIRE WRAPPED OVER THE LUMBER AND AROUND THE TREE AT A MIN. OF 2 LOCATIONS.

3. THE GAP BETWEEN THE BOARDS IS TO BE 4 INCHES OR LESS.

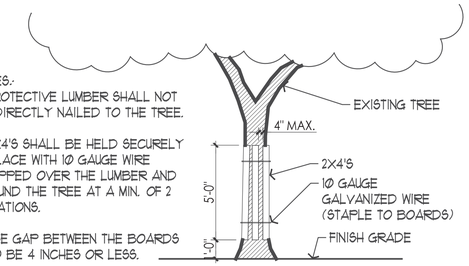

3 DETAIL: 2X4 TREE PROTECTION

SCALE: 1/4" = 1'-0"

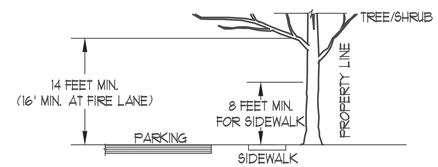

A MINIMUM BRANCH CLEARANCE OF 14 FEET ABOVE PARKING LOT/DRIVE LANES (16 FEET ABOVE FIRE LANES) MUST BE MAINTAINED.

2 DETAIL: TREE BRANCH CLEARANCE

SCALE: N.T.S.

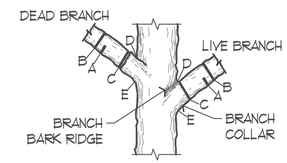

NOTE: DO NOT CUT FROM D TO E.

FOR OAKS ONLY: PAINT ALL WOUNDS OR CUTS WITH PRUNING PAINT WITHIN 2Ø MIN. TO PREVENT THE SPREAD OF OAK WILT.

PROPER PRUNING FOR BRANCHES 1-1/2" OR GREATER DIAMETER.

A. FIRST CUT - TO PREVENT THE BARK FROM BEING PEELED WHEN THE BRANCH FALLS.
B. SECOND CUT - TO REDUCE THE WEIGHT OF BRANCH.
C. FINAL CUT - ALLOW FOR HEALING COLLAR BUT NO STUBS.
D. BRANCH RIDGES - INDENT PROPERLY BRANCH RIDGES WHICH ARE SITE FOR DECAY.

4 DETAIL: BRANCH PRUNING

N.T.S.

REGISTERED LANDSCAPE ARCHITECT
KAREN A. SCHMIDT
622
STATE OF TEXAS
11/7/2014

IDC
Planners · Engineers · Program Managers

RIALTO STUDIO
Rialto Studio, Inc.
Landscape Architecture
2405 Broadway, Suite 105
San Antonio, Texas 78215
P 210.828.1155
F 210.828.1399

Date:	Revisions/Submissions

CITY OF SAN ANTONIO
TRANSPORTATION & CAPITAL IMPROVEMENTS

CITY OF SAN ANTONIO
CAPITAL IMPROVEMENTS
MANAGEMENT SERVICES DIVISION
MUNICIPAL PLAZA BUILDING
114 W. Commerce P.O. BOX 839966
San Antonio, Texas 78283-3966
TEL. (210) 207-2879 FAX (210) 207-2197

GOLD CANYON PARK
San Antonio, Texas
Construction Plan Set

TREE PROTECTION DETAILS

TP103

Drawn By:	Designed By:
SFA	SFA

Date: November 7, 2014
Project No. : RSI-1306
Filename:

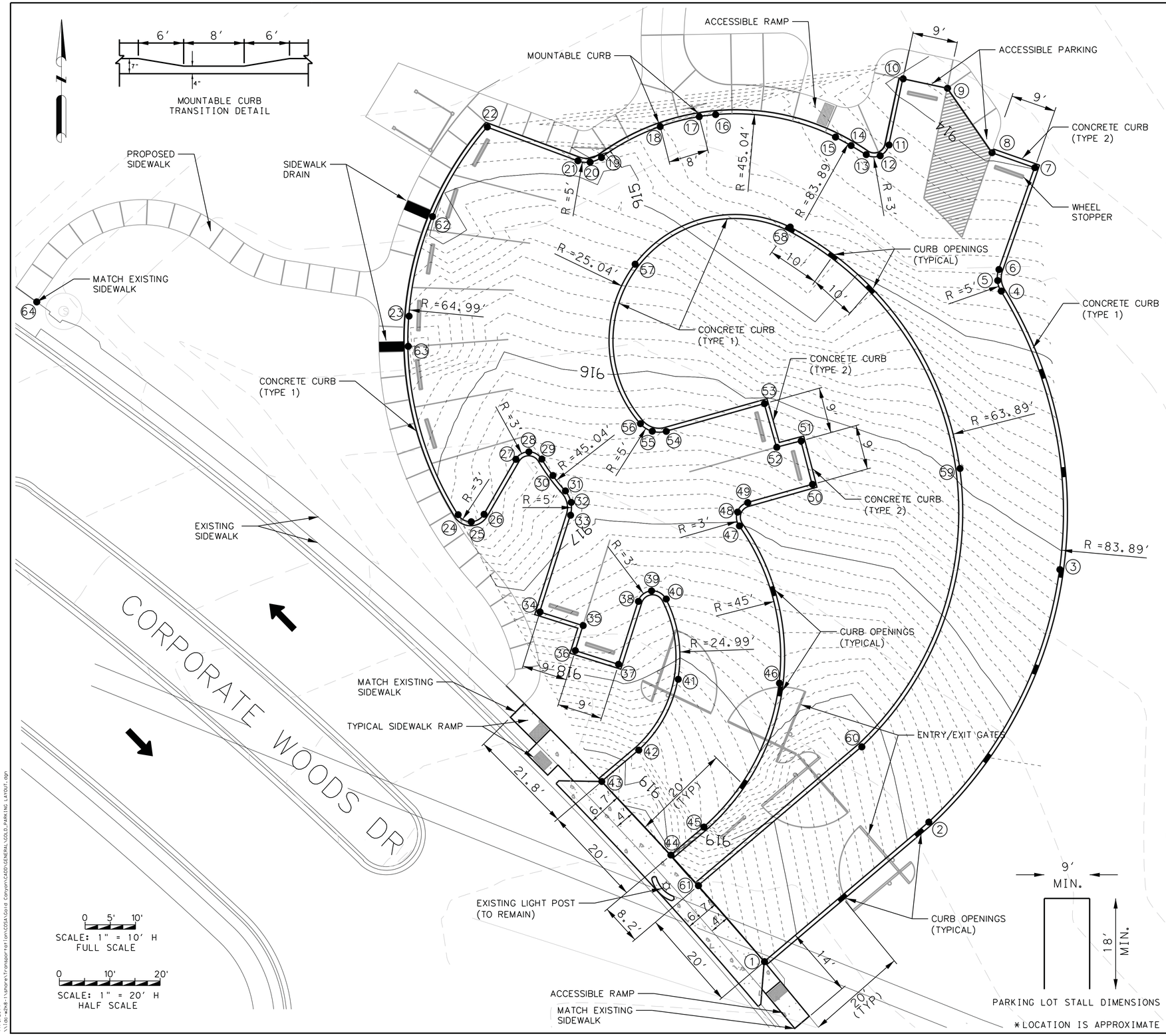

POINT No.	X	Y	ELEVATION	POINT LOCATION
1	2146407.5111	13771735.1388	919.29	EC
2	2146440.1379	13771762.8320	917.81	PC
3	2146466.1523	13771812.9566	916.11	CR
4	2146454.5196	13771868.2227	914.70	PC
5	2146453.8077	13771870.3107	914.63	CR
6	2146454.0636	13771872.5019	914.57	PC
7	2146461.1847	13771892.7164	913.99	TP
8	2146452.6890	13771895.6869	913.96	EC
9	2146443.8443	13771908.4793	913.87	TP
10	2146435.0414	13771910.3525	913.93	EC
11	2146432.2476	13771897.2232	914.18	PC
12	2146430.4810	13771895.0842	914.22	CR
13	2146427.7159	13771895.3083	914.26	PC
14	2146424.7015	13771897.1175	914.29	CR
15	2146421.6139	13771898.7988	914.32	PC
16	2146397.8127	13771903.2513	914.58	CR
17	2146394.5503	13771902.8456	914.62	POC
18	2146386.7974	13771900.8727	914.70	POC
19	2146375.1458	13771894.7348	914.85	PC
20	2146372.8800	13771893.8176	914.87	CR
21	2146370.4503	13771894.0841	914.90	PC
22	2146352.4704	13771900.7732	914.72	PC
23	2146336.9308	13771863.2589	915.44	CR
24	2146346.6914	13771823.8441	916.15	PC
25	2146349.2836	13771822.4393	916.19	CR
26	2146351.8264	13771823.9317	916.22	PC
27	2146358.1601	13771834.8325	916.46	PC
28	2146360.7203	13771836.3252	916.47	CR
29	2146363.3134	13771834.8904	916.48	PC
30	2146365.5123	13771831.6244	916.60	CR
31	2146367.9880	13771828.5629	916.71	PC
32	2146369.1328	13771826.2877	916.79	CR
33	2146369.0083	13771823.7438	916.86	PC
34	2146362.9348	13771804.5473	917.25	TP
35	2146371.5156	13771801.8324	917.53	TP
36	2146369.9481	13771796.8783	917.70	TP
37	2146378.5289	13771794.1635	917.77	TP
38	2146382.4762	13771806.6395	917.53	PC
39	2146385.0826	13771808.7238	917.54	CR
40	2146388.0031	13771807.1088	917.54	PC
41	2146390.3755	13771791.1837	918.16	CR
42	2146382.5426	13771777.1166	918.78	PC
43	2146375.2080	13771770.8914	919.39	EC
44	2146388.9236	13771756.2973	918.97	EC
45	2146395.4844	13771761.8683	918.38	PC
46	2146410.4714	13771790.3957	917.70	CR
47	2146402.5404	13771821.6290	917.02	PC
48	2146402.1633	13771824.3619	916.91	CR
49	2146404.1773	13771826.2472	916.79	PC
50	2146417.0299	13771829.8684	916.47	TP
51	2146414.7925	13771838.4819	916.28	TP
52	2146409.9556	13771837.2256	916.36	TP
53	2146407.5129	13771845.8878	916.08	TP
54	2146388.0021	13771840.3906	916.42	PC
55	2146385.2208	13771840.4107	916.37	CR
56	2146382.8805	13771841.9139	916.31	PC
57	2146381.8225	13771873.5607	915.36	CR
58	2146412.6163	13771880.9352	914.66	PC
59	2146446.3394	13771833.0204	915.93	CR
60	2146426.8316	13771777.7708	918.20	PC
61	2146394.3928	13771750.2353	919.69	EC
62	2146341.5990	13771883.0270	915.06	POC
63	2146336.7579	13771857.2657	915.53	POC
* 64	2146263.0087	13771866.0783		TP

POINT LOCATION:
CR : CENTER OF RADIUS
PC : POINT OF CURVE (BEGIN/END)
TP : TANGENT POINT
EC : END OF CURB
POC : POINT ON CURB

GENERAL NOTES:
1. FOR DRIVEWAY/SIDEWALK RAMP DETAILS, SEE SHEET C101.
2. ALL POINTS ARE AT THE EDGE OF PAVEMENT.
3. FOR CURB DETAILS, SEE SHEET C102.
4. PAVEMENT MARKINGS AND SIGNING FOR ACCESSIBLE PARKING, SEE STANDARD PM(AP)-98.
5. FOR DETAILS ON ENTRY/EXIT GATES, SEE SHEET L202
6. SEE SHEET C102 FOR TYPICAL CURB OPENING DETAIL.
7. FOR PARKING LOT SIDEWALK AND TRAIL INFORMATION SEE LANDSCAPING SHEETS.
8. FOR FOR ACCESSIBLE RAMP, SEE SHEET L201 DETAIL 2.

STATE OF TEXAS
CHARLES M. SHINE
62999
LICENSED
PROFESSIONAL ENGINEER
11-7-2014

IDC
Planners - Engineers - Program Managers

RIALTO STUDIO
Rialto Studio, Inc.
Landscape Architecture
2535 Jackson Ave. Ste. 100
San Antonio, TX 78213
P 210.826.1100
F 210.826.1108

Date: Revisions/Submissions

CITY OF SAN ANTONIO
TRANSPORTATION & CAPITAL IMPROVEMENTS

CITY OF SAN ANTONIO
TRANSPORTATION AND CAPITAL IMPROVEMENTS (TCI)
MUNICIPAL PLAZA BUILDING
114 W. Commerce P.O. BOX 839966
San Antonio, Texas 78283-3966
TEL. (210) 207-2879 FAX (210) 207-2197

GOLD CANYON PARK
San Antonio, Texas
Construction Plans
PARKING LAYOUT

C100

Drawn By:	Designed By:
KA	CS

Date:
November 06, 2014
Project No. :
422-0300
Filename:

Kerema
10:13:52 AM
11/6/2014
\\sa-nas8-1\shared\Transportation\CDSA\Gold Canyon\CADD\GENERAL\GOLD_PARKING LAYOUT.dgn

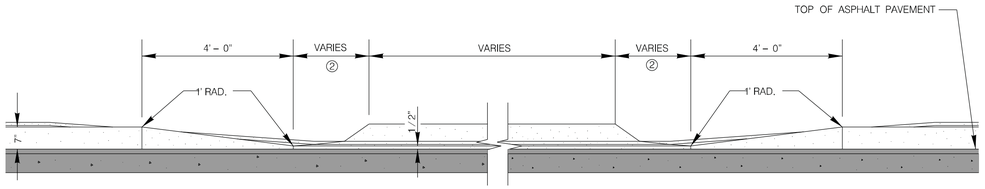

② RESIDENTIAL : 2' MAXIMUM;
COMMERCIAL: SEE PLAN VIEW

CURB PROFILE AT DRIVEWAY

WITH SIDEWALK SEPARATED FROM CURB

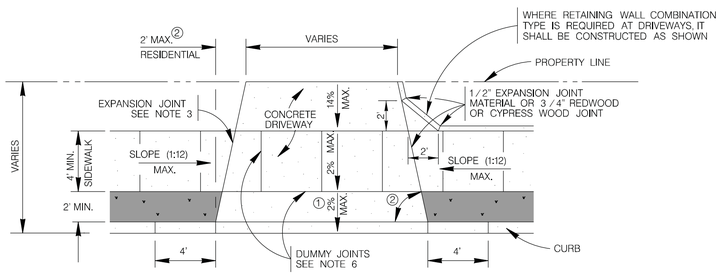

① 8% MAX. TO THE EDGE OF THE SIDEWALK IF SIDEWALK SEPARATION IS 4' OR GREATER.

② 45° FOR COMMERCIAL DRIVEWAY

TYPICAL DRIVEWAY PLAN VIEW

WITH SIDEWALK SEPARATED FROM CURB

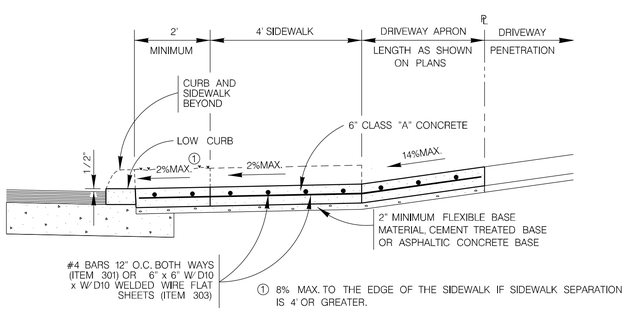

TYPICAL COMMERCIAL DRIVEWAY SECTION

WITH SIDEWALK SEPARATED FROM CURB
ITEM 503.2

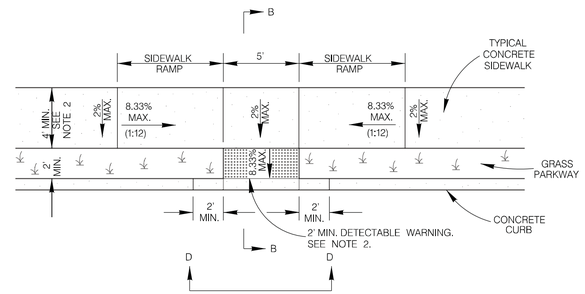

TYPICAL SIDEWALK RAMP – TYPE IV

USED AT TEE INTERSECTIONS WHERE SIDEWALK IS SEPARATED FROM CURB

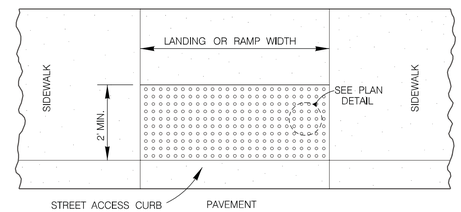

DETECTABLE WARNING SURFACE

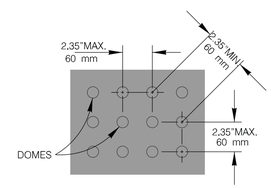

PLAN DETAIL

NO SCALE

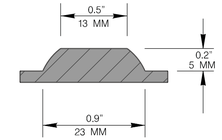

DOME SECTION

NO SCALE

NOTE:
STAMPED CONCRETE TRUNCATED DOMES WILL NOT BE ALLOWED TO BE USED FOR DETECTABLE WARNING ON WHEELCHAIR RAMPS. CONTRACTOR MUST SUBMIT TRUNCATED DOME INFORMATION THAT IS TO BE USED ON WHEELCHAIR RAMPS TO THE PROJECT MANAGER FOR APPROVAL AT LEAST 30 DAYS PRIOR TO INSTALLATION.

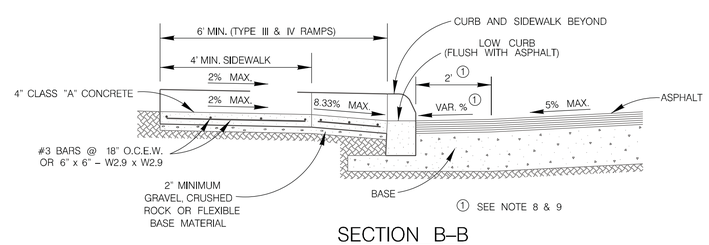

① SEE NOTE 8 & 9

SECTION B–B

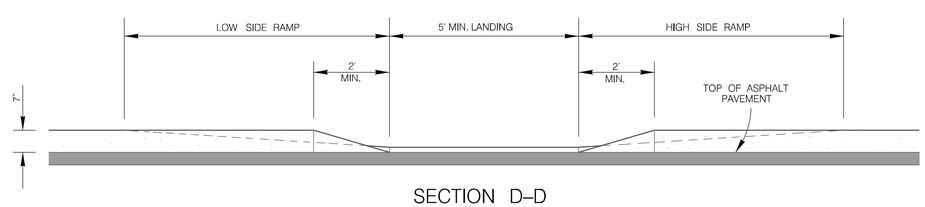

SECTION D–D

CURB PROFILE WHERE SIDEWALK IS SEPARATED FROM CURB
SCALE : 1"=4'

GENERAL NOTES

1. SIDEWALK RAMP LENGTHS PRESENTED IN TABLE 1 ARE GUIDELINES ONLY. SIDEWALK RAMP LENGTHS SHALL BE OF SUFFICIENT LENGTH TO MAINTAIN 8.33% (1:12) MAXIMUM SLOPE.
2. ALL CURB–RAMPS OR LANDINGS ABUTTING THE CROSSWALK SHALL HAVE A DETECTABLE WARNING 24 INCHES DEEP (IN THE DIRECTION OF PEDESTRIAN TRAVEL) AND EXTENDING THE FULL WIDTH OF THE CURB RAMP OR LANDING. THE DETECTABLE WARNING SHALL CONSIST OF RAISED TRUNCATED DOMES, ALIGNED IN A GRID PATTERN WITH A DIAMETER OF A NOMINAL 0.9 INCHES (23 MM), A HEIGHT OF NOMINAL 0.2 INCHES (5 MM) AND A CENTER–TO–CENTER SPACING OF NOMINAL 2.35 INCHES (60 MM). THE DETECTABLE WARNING SURFACE SHALL BE A CAST–IN–PLACE TILE CONFORMING TO THE CITY OF SAN ANTONIO STANDARD SPECIFI–CATIONS OR PAVERS CONFORMING TO TXDOT STANDARD PED–05, PEDESTRIAN FACILITIES.
3. CONSTRUCTION OF ALL WHEELCHAIR RAMPS TO BE INCLUDED UNDER ITEMS "500 – CONCRETE CURB, GUTTER, AND CONCRETE CURB AND GUTTER" AND / OR "502 – CONCRETE SIDEWALKS". RAMP SURFACE SHALL BE BRUSH FINISHED.
4. THESE DETAILS ARE FOR REFERENCE ONLY. ACTUAL LOCATIONS OF WHEELCHAIR RAMPS TO BE SHOWN ON CONSTRUCTION PLANS. CITY CONSTRUCTION INSPECTOR CAN ADJUST LOCATIONS FOR SAFETY OR UTILITY CLEARANCE.
5. WHEELCHAIR RAMP SHALL BE CONSTRUCTED WITH 4" CLASS "A" CONCRETE AND 2" MINIMUM GRAVEL, CRUSHED ROCK OR FLEXIBLE BASE MATERIAL.
6. REINFORCING STEEL SHALL BE #3 BARS AT 18" O.C.E.W. OR 6" x 6" – W2.9 x W2.9 WIRE MESH.
7. SIDEWALK CROSS GRADE SHALL HAVE A MAXIMUM SLOPE OF 2%. LANDINGS SHALL HAVE A MAXIMUM SLOPE OF 2% IN ANY DIRECTION.
8. THE CHANGE OF GRADE BETWEEN ADJACENT SURFACES SHALL BE LESS THAN 11%. THE CHANGE OF GRADE SHALL BE DEFINED AS THE ALGEBRAIC DIFFERENCE OF THE ADJACENT SURFACE SLOPES. IN THE CASE OF A STREET ACCESS RAMP DESIGNED AT THE 8.33% MAXIMUM SLOPE, THE ADJACENT PAVEMENT CROSS SLOPE SHALL BE LESS THAN 2.67% (I.E. 8.33–(–2.67) = 11). IN ADDITION, THE ADJACENT PAVEMENT CROSS SLOPE SHALL BE LESS THAN OR EQUAL TO 5%.
9. IF THE CHANGE OF GRADE BETWEEN ADJACENT SURFACES IS GREATER THAN OR EQUAL TO 11%, A LEVELING STRIP, 2 FEET IN LENGTH, SHALL BE PROVIDED TO TRANSITION THE ADJACENT SURFACES.
10. ADA COMPLIANCE IN ALTERATIONS INCLUDE ONLY THAT WORK WITHIN THE LIMITS, BOUNDARIES OR SCOPE OF A PLANNED PROJECT.

CONCRETE DRIVEWAY NOTES

1. 7" MINIMUM HEIGHT WILL NOT NECESSARILY OCCUR AT THE PROPERTY LINE. IT MAY OCCUR WITHIN THE RIGHT OF WAY OR WITHIN THE DRIVEWAY PENETRATION ON PRIVATE PROPERTY.
2. DUMMY JOINTS PARALLEL TO THE CURB SHALL BE PLACED WHERE THE SIDEWALK MEETS THE DRIVEWAY. DUMMY JOINTS PERPENDICULAR TO THE CURB, AND WITHIN THE BOUNDARIES OF THE PARALLEL DUMMY JOINTS, SHALL BE PLACED AT INTERVALS EQUAL TO THE WIDTH OF THE SIDEWALK.
3. A MINIMUM OF TWO ROUND AND SMOOTH DOWEL BARS 3/8" IN DIAMETER AND 18" IN LENGTH SHALL BE SPACED 18" APART AT EACH EXPANSION JOINT.
4. SIDEWALK RAMP LENGTHS SHALL BE OF SUFFICIENT LENGTH TO MAINTAIN 8.33% (1:12) MAXIMUM SLOPE. WHERE SIDEWALKS CROSS DRIVEWAYS, SIDEWALK CROSS SLOPE SHALL NOT EXCEED 2%.
5. SIDEWALK RAMP SURFACE SHALL BE BRUSH FINISHED.

STATE OF TEXAS
CHARLES M. SHINE
62999
11-7-2014

IDC
Planners - Engineers - Program Managers
RIALTO STUDIO
Rialto Studio, Inc.
Landscape Architecture
2100 Jackson Keller, Suite 108
San Antonio, Texas 78213
P 210.829.1009
F 210.829.1008

Date: Revisions/Submissions

CITY OF SAN ANTONIO
TRANSPORTATION & CAPITAL IMPROVEMENTS

CITY OF SAN ANTONIO
TRANSPORTATION AND CAPITAL IMPROVEMENTS (TCI)
MUNICIPAL PLAZA BUILDING
114 W. Commerce P.O. BOX 839966
San Antonio, Texas 78283-3966
TEL. (210) 207-2879 FAX (210) 207-2197

GOLD CANYON PARK
San Antonio, Texas
Construction Plans
CIVIL DETAILS

C101

Drawn By:	Designed By:
KA	CS

Date:
November 06, 2014
Project No. :
422-0300
Filename:

kcremo
10:15:31 AM
11/6/2014
\\ldc-ws8-1\shared\Transportation\COSA\Gold Canyon\CADD\GENERAL\GOLD_SITE DETAILS.dgn

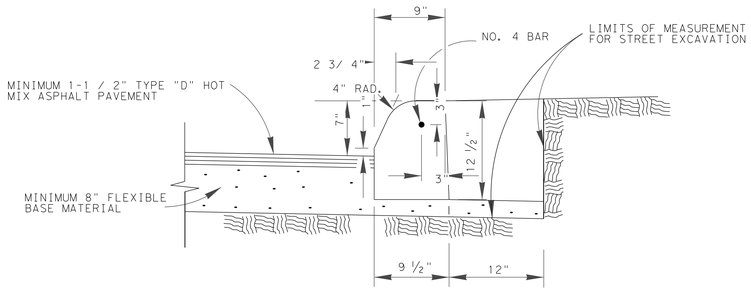

CONCRETE CURB TYPE 1

ITEM 500 ON FLEXIBLE BASE MATERIAL

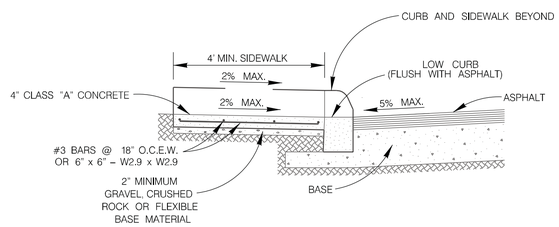

CONCRETE CURB TYPE 2

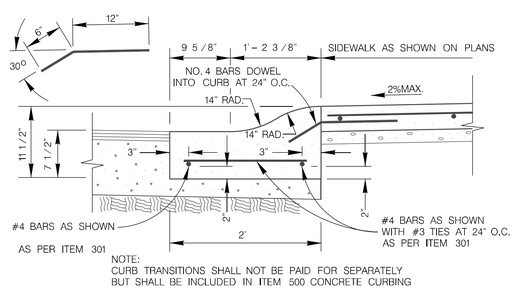

NOTE:
CURB TRANSITIONS SHALL NOT BE PAID FOR SEPARATELY BUT SHALL BE INCLUDED IN ITEM 500 CONCRETE CURBING

MOUNTABLE CURB

ITEM 500 ON COMPACTED SUBGRADE

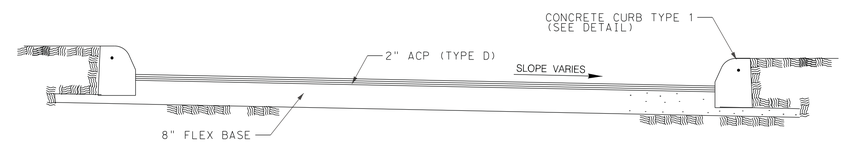

PARKING LOT PAVEMENT DETAIL WITH RAISED CURB

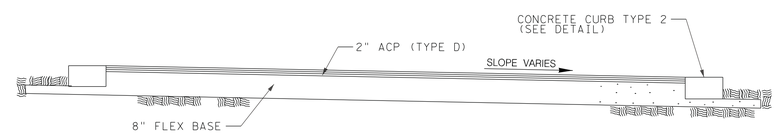

PARKING LOT PAVEMENT DETAIL WITH LAY DOWN CURB

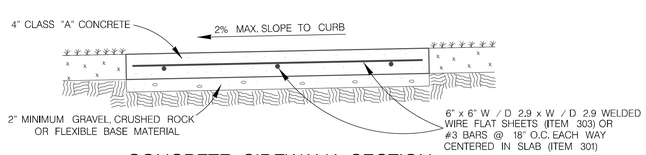

CONCRETE SIDEWALK SECTION

ITEM 502

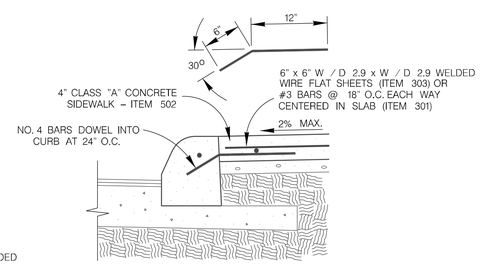

CONCRETE SIDEWALK ABUTTING CURB SECTION

ITEM 502

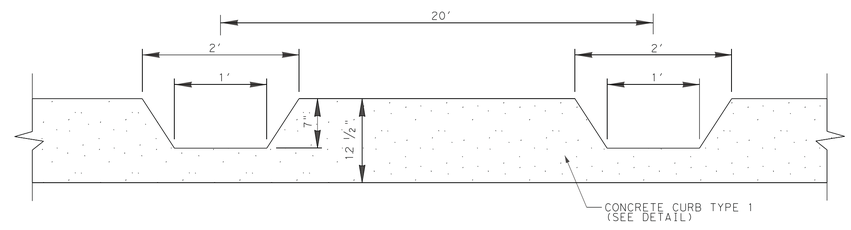

PARKING LOT CURB OPENING DETAIL

STATE OF TEXAS
CHARLES M. SHINE
62999
LICENSED
PROFESSIONAL ENGINEER
Charles M. Shine P.E.
11-7-2014

IDC
Planners - Engineers - Program Managers

RIALTO STUDIO
Rialto Studio, Inc.
Landscape Architecture
2226 Jackson Keller, Ste. 101B
San Antonio, Texas 78213
P 210.826.1388
F 210.826.1389

Date: Revisions/Submissions

CITY OF SAN ANTONIO
TRANSPORTATION & CAPITAL IMPROVEMENTS

CITY OF SAN ANTONIO
TRANSPORTATION AND CAPITAL IMPROVEMENTS (TCI)
MUNICIPAL PLAZA BUILDING
114 W. Commerce P.O. BOX 839966
San Antonio, Texas 78283-3966
TEL. (210) 207-2879 FAX (210) 207-2197

GOLD CANYON PARK
San Antonio, Texas
Construction Plans
CIVIL DETAILS

C102

Drawn By:	Designed By:
KA	CS

Date: November 06, 2014
Project No. : 422-0300
Filename:

kcrenno
5:23:51 PM
11/10/2014
\\tcm-ntdom-1\share\Transportation\DDSA\Gold Canyon\CADD\GENERAL\GOLD_SITE DETAILS_2.dgn

TABLE OF VARIABLE DIMENSIONS AND QUANTITIES FOR ONE HEADWALL (4)

SLOPE	DIA OF PIPE,D	Values for one Pipe			Values to be added for each addt'l Pipe		
		W	Reinf (Lbs)	Conc (CY) (1)	W	Reinf (Lbs)	Conc (CY) (1)
2:1	54"	27'- 6"	701	7.5	7'- 6"	82	1.6
3:1	54"	39'- 0"	1015	11.0	7'- 6"	84	1.6
4:1	54"	50'- 6"	1364	14.4	7'- 6"	84	1.6
6:1	54"	73'- 6"	2064	21.3	7'- 6"	83	1.6

TABLE OF CONSTANT DIMENSIONS

DIA OF PIPE,D	G	K	H	T	E
54"	3'- 0"	1'- 3"	6'- 5"	1'- 0"	3'- 3"

TABLE OF REINFORCING STEEL (4)

Bar	Size	Spa	No.
A1	# 5	~	2
A2	# 5	1'-6"	~
E	# 5	~	2
F	# 5	1'-0"	~

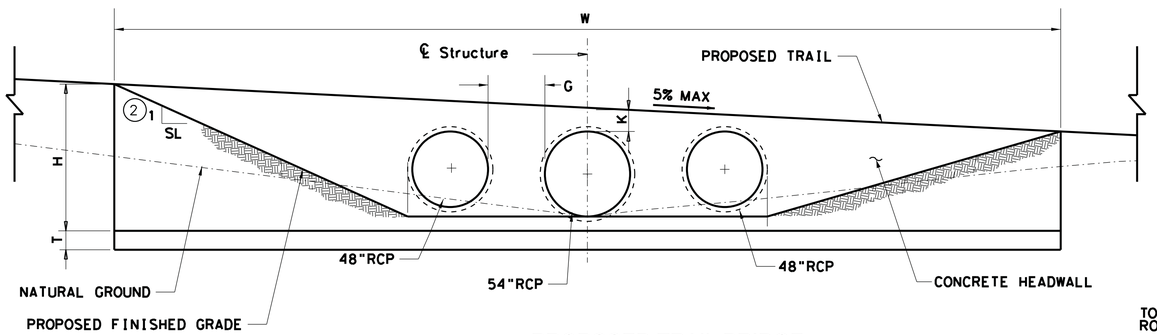

PROPOSED TRAIL BRIDGE
CONCRETE HEADWALLS AND PIPE DETAIL
(ADD ALTERNATIVE #2)

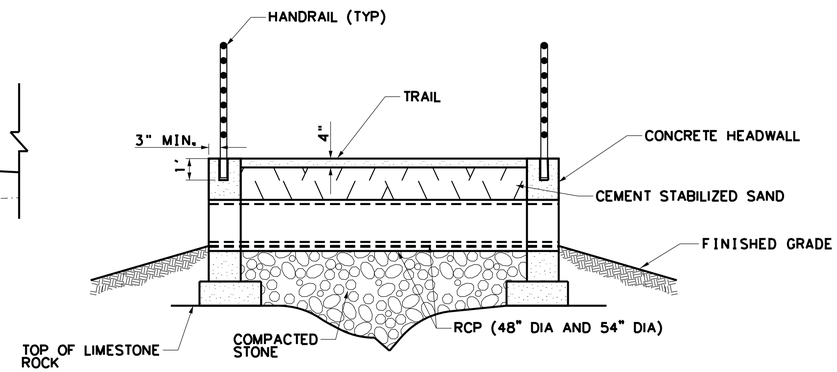

CROSS-SECTION TRAIL BRIDGE
(ADD ALTERNATIVE #2)

ADD ALTERNATIVE #2

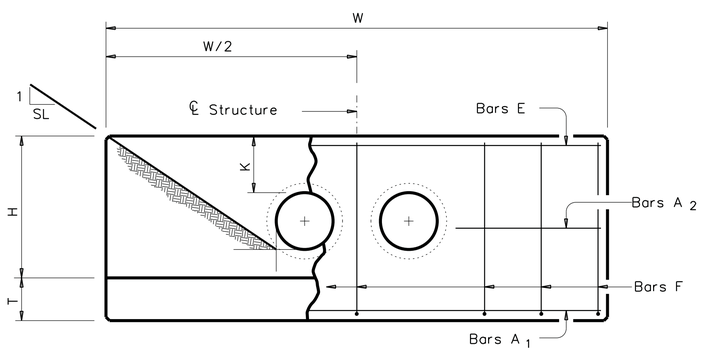

ELEVATION

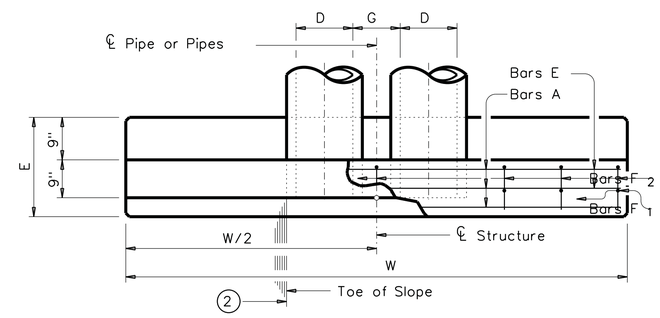

PLAN OF NON-SKEWED PIPES

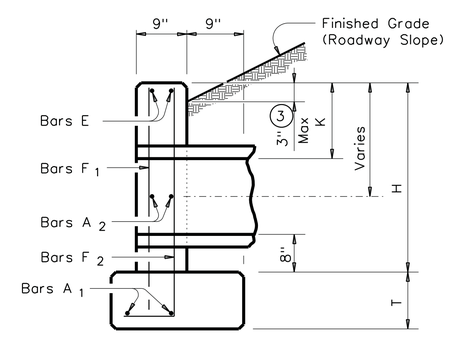

℄ SECTION

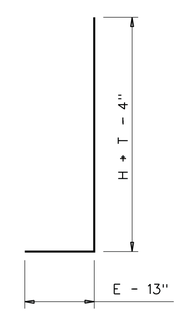

BARS F 2

GENERAL NOTES:

Designed according to AASHTO LRFD Specifications.

Reinforcing steel shall be placed with the center of the outside layer of bars 2" from the surface of the concrete.

All reinforcing steel shall be Grade 60.

All concrete shall be Class "C" and shall have a minimum compressive strength of 3600 psi.

(1) Quantities shown are for concrete pipe and will increase slightly for metal pipe installations.

(2) Indicated slope is perpendicular to centerline Pipe or Pipes.

(3) For vehicle safety, curbs shall project no more than 3" above finished grade. Curb heights shall be reduced, if necessary, to meet these requirements. No changes will be made in quantities and no additional compensation will be allowed for this work.

(4) Quantities shown are for one structure end only (one headwall).

CONCRETE HEADWALLS
WITH PARALLEL WINGS FOR
NON-SKEWED PIPE CULVERTS

STATE OF TEXAS
CHARLES M. SHINE
62999
LICENSED
PROFESSIONAL ENGINEER
Charles M. Shine P.E.
11-7-2014

IDC
Planners - Engineers - Program Managers
RIALTO STUDIO
Rialto Studio, Inc.
Landscape Architecture
Land Planning
Site Design
Urban Design
Parks & Recreation
Golf Course Design
Site Analysis
Master Planning
Feasibility Studies
Land Development
Consultation
Expert Witnesses
Mediation
Arbitration
Litigation
P 210.826.1336
F 210.826.1338

Date: Revisions/Submissions

CITY OF SAN ANTONIO
TRANSPORTATION & CAPITAL IMPROVEMENTS

CITY OF SAN ANTONIO
TRANSPORTATION AND CAPITAL IMPROVEMENTS (TCI)
MUNICIPAL PLAZA BUILDING
114 W. Commerce P.O. BOX 839966
San Antonio, Texas 78283-3966
TEL. (210) 207-2879 FAX (210) 207-2197

GOLD CANYON PARK
San Antonio, Texas
Construction Plans
CIVIL DETAILS

C103

Drawn By:	Designed By:
KA	CS

Date: November 06, 2014
Project No. : 422-0300
Filename:

Kgreene
10:25:21 AM
11/6/2014
\\SC-ACS-1\sanca\Transportation\COSA\Gold Canyon\CADD\GENERAL\GOLD_SITE DETAILS_3.dgn

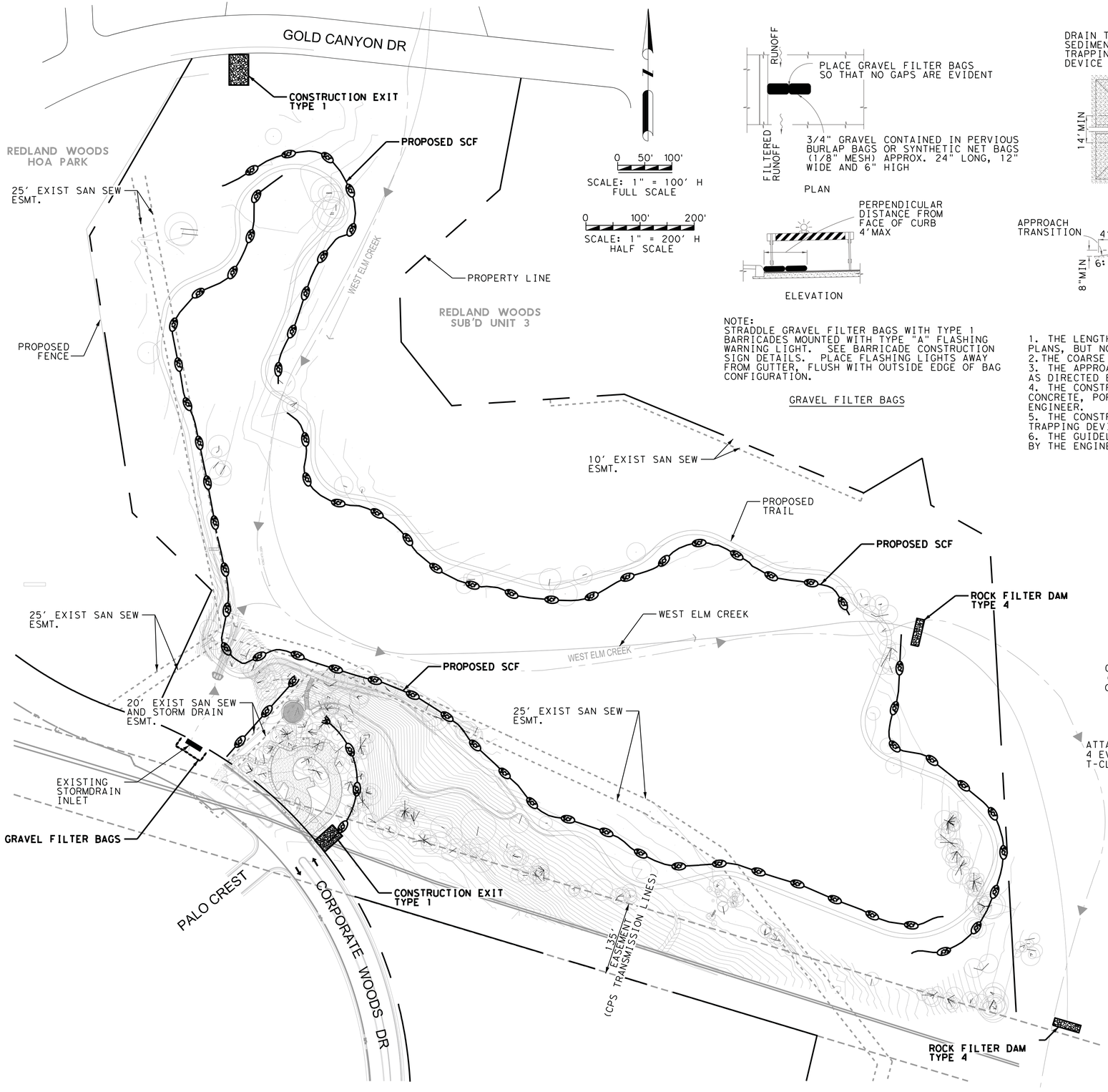

0 50' 100'
SCALE: 1" = 100' H
FULL SCALE

0 100' 200'
SCALE: 1" = 200' H
HALF SCALE

PLAN

ELEVATION

NOTE:
STRADDLE GRAVEL FILTER BAGS WITH TYPE 1 BARRICADES MOUNTED WITH TYPE "A" FLASHING WARNING LIGHT. SEE BARRICADE CONSTRUCTION SIGN DETAILS. PLACE FLASHING LIGHTS AWAY FROM GUTTER, FLUSH WITH OUTSIDE EDGE OF BAG CONFIGURATION.

GRAVEL FILTER BAGS

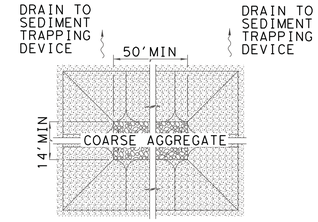

PLAN

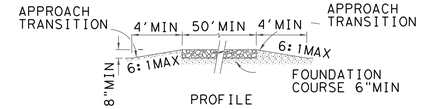

PROFILE

GENERAL NOTES
1. THE LENGTH OF THE TYPE 1 CONSTRUCTION EXIT SHALL BE AS INDICATED ON THE PLANS, BUT NOT LESS THAN 50'.
2. THE COARSE AGGREGATE SHOULD BE OPEN GRADED WITH A SIZE OF 4" TO 8".
3. THE APPROACH TRANSITIONS SHOULD BE NO STEEPER THAN 6 : 1 AND CONSTRUCTED AS DIRECTED BY THE ENGINEER.
4. THE CONSTRUCTION EXIT FOUNDATION COURSE SHALL BE FLEXIBLE BASE, BITUMINOUS CONCRETE, PORTLAND CEMENT CONCRETE OR OTHER MATERIAL AS APPROVED BY THE ENGINEER.
5. THE CONSTRUCTION EXIT SHALL BE GRADED TO ALLOW DRAINAGE TO A SEDIMENT TRAPPING DEVICE.
6. THE GUIDELINES SHOWN HEREON ARE SUGGESTIONS ONLY AND MAY BE MODIFIED BY THE ENGINEER.

CONSTRUCTION EXIT - TYPE 1

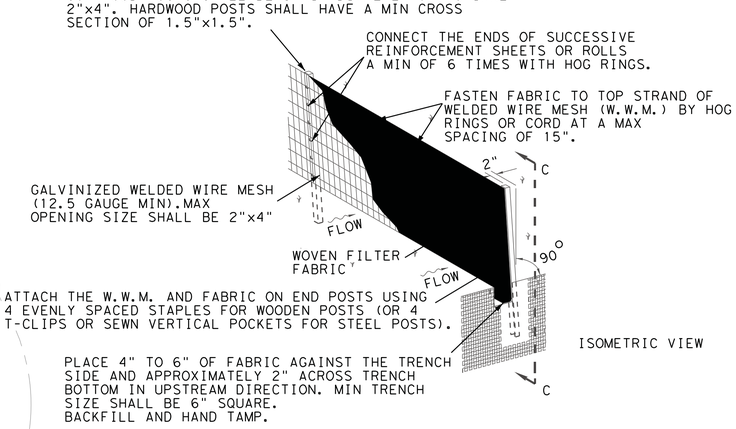

ISOMETRIC VIEW

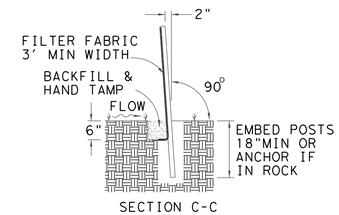

SECTION C-C

SEDIMENT CONTROL FENCE USAGE GUIDELINES

A SEDIMENT CONTROL FENCE MAY BE CONSTRUCTED NEAR THE DOWNSTREAM PERIMETER OF A DISTURBED AREA ALONG A CONTOUR TO INTERCEPT SEDIMENT FROM OVERLAND RUN-OFF. A 2 YEAR STORM FREQUENCY MAY BE USED TO CALCULATE THE FLOW RATE TO BE FILTERED.

SEDIMENT CONTROL FENCE SHOULD BE SIZED TO FILTER A MAXIMUM FLOW THRU RATE OF 100 GPM / FT SQUARED. SEDIMENT CONTROL FENCE IS NOT RECOMMENDED TO CONTROL EROSION FROM A DRAINAGE AREA LARGER THAN 2 ACRES.

GENERAL NOTES
1. THE GUIDELINES SHOWN HEREON ARE SUGGESTIONS ONLY AND MAY BE MODIFIED BY THE ENGINEER.

TEMPORARY SEDIMENT CONTROL FENCE

LEGEND:

- PROPERTY LINE
- TEMPORARY SEDIMENT CONTROL FENCE
- EXISTING EASEMENT
- CONSTRUCTION ENTRANCE/EXIT TYPE 1
- TRAFFIC FLOW ARROW
- GRAVEL FILTER BAGS
- ROCK FILTER DAM

GENERAL NOTES:
1. CONSTRUCTION EXITS TO BE PLACED AS DIRECTED BY THE ENGINEER.

CHARLES M. SHINE 62999 CERTIFIED PROFESSIONAL ENGINEER
11-7-2014

IDC Planners - Engineers - Program Managers
RIALTO STUDIO
Rialto Studio, Inc.
Landscape Architecture
2000 Jackson Ave. Ste. 100
San Antonio, Texas 78213
P 210.826.2268
F 210.826.2268

Date: Revisions/Submissions

CITY OF SAN ANTONIO TRANSPORTATION & CAPITAL IMPROVEMENTS

CITY OF SAN ANTONIO
TRANSPORTATION AND CAPITAL IMPROVEMENTS (TCI)
MUNICIPAL PLAZA BUILDING
114 W. Commerce P.O. BOX 839966
San Antonio, Texas 78283-3966
TEL. (210) 207-2879 FAX (210) 207-2197

GOLD CANYON PARK
San Antonio, Texas
Construction Plans

STORM WATER POLLUTION PREVENTION PLAN

C200

Drawn By:	Designed By:
KA	CS

Date: November 06, 2014
Project No.: 422-0300
Filename:

kornemo
10:27:18 AM
11/6/2014
\\Ceprw28-1\sanpwis\transportation\CDS4\Gold Canyon\CADD\ENVIRONMENTAL\GOLD_SWPPP.dgn

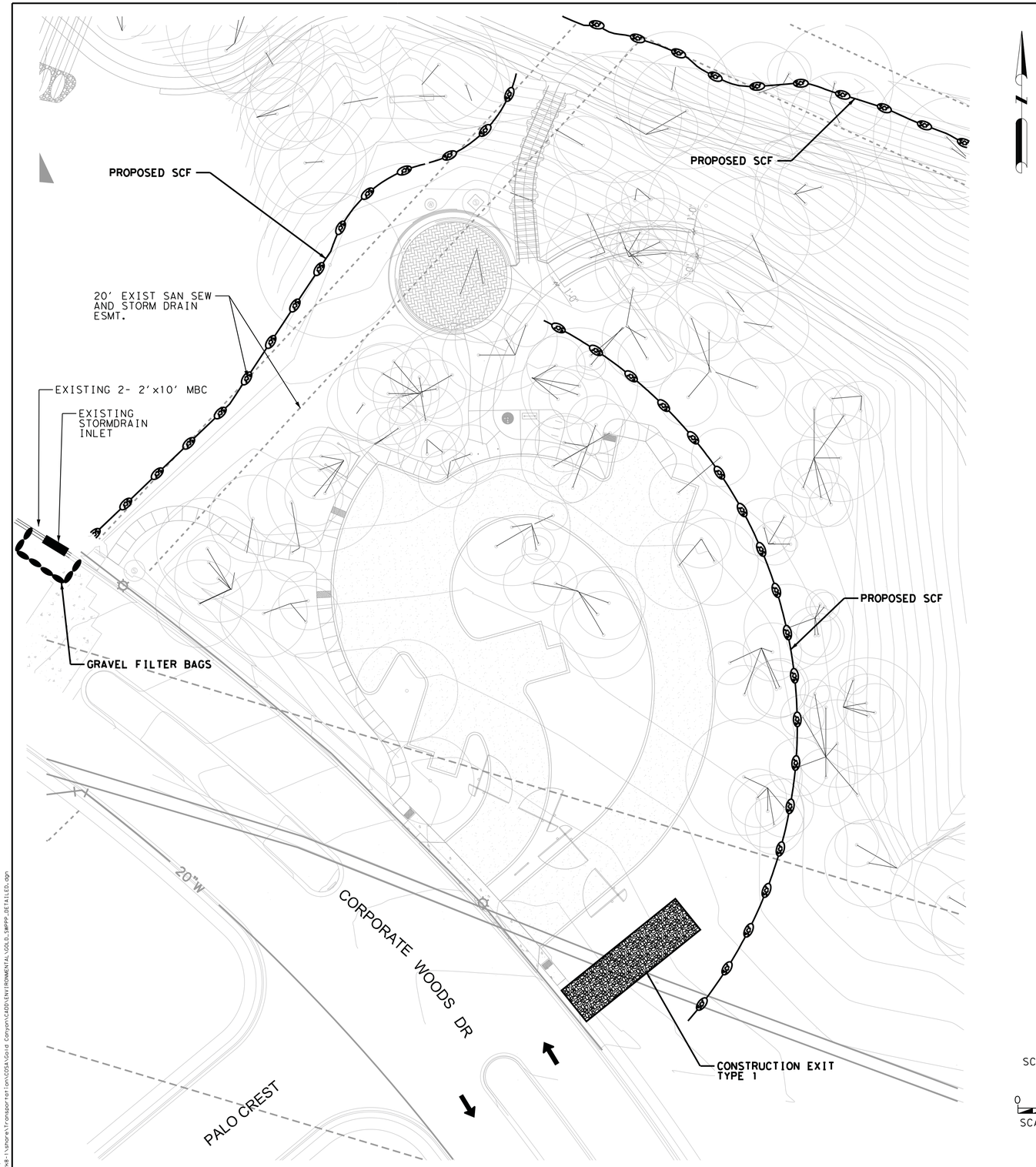

LEGEND:

- PROPERTY LINE
- TEMPORARY SEDIMENT CONTROL FENCE
- EXISTING EASEMENT
- CONSTRUCTION ENTRANCE/EXIT TYPE 1
- TRAFFIC FLOW ARROW
- GRAVEL FILTER BAGS
- ROCK FILTER DAM

ROCK FILTER DAM USAGE GUIDELINES

TYPE 4 (SACK GABIONS) :

TYPE 4 MAY BE USED IN DITCHES AND SMALLER CHANNELS TO FORM AN EROSION CONTROL DAM.

GENERAL NOTES

1. IF SHOWN ON THE PLANS OR DIRECTED BY THE ENGINEER, FILTER DAMS SHOULD BE PLACED NEAR THE TOE OF SLOPES WHERE EROSION IS ANTICIPATED, UPSTREAM AND / OR DOWNSTREAM AT DRAINAGE STRUCTURES, AND IN ROADWAY DITCHES AND CHANNELS TO COLLECT SEDIMENT.
2. MATERIALS (AGGREGATE, WIRE MESH, SANDBAGS, ETC.) SHALL BE AS INDICATED BY THE SPECIFICATION FOR ROCK FILTER DAMS FOR EROSION AND SEDIMENTATION CONTROL.
3. THE ROCK FILTER DAM DIMENSIONS SHALL BE AS INDICATED ON THE STORM WATER POLLUTION PREVENTION PLANS.
4. SIDE SLOPES SHOULD BE 2 : 1 OR FLATTER. DAMS WITHIN THE SAFETY ZONE SHALL HAVE SIDE SLOPES OF 6 : 1 OR FLATTER.
5. MAINTAIN A MINIMUM OF 1' BETWEEN TOP OF ROCK FILTER DAM WEIR AND TOP OF EMBANKMENT FOR FILTER DAMS AT SEDIMENT TRAPS.
6. FILTER DAMS SHOULD BE EMBEDDED A MINIMUM OF 4" INTO THE EXISTING GROUND.
7. THE SEDIMENT TRAP FOR PONDING OF SEDIMENT LADEN RUNOFF SHALL BE OF THE DIMENSIONS SHOWN ON THE PLANS.
8. ROCK FILTER DAM TYPES 2 & 3 SHALL BE SECURED WITH 20 GAUGE GALVANIZED WOVEN WIRE MESH WITH 1" DIAMETER HEXAGONAL OPENINGS. THE AGGREGATE SHALL BE PLACED ON THE MESH TO THE HEIGHT AND SLOPES SPECIFIED. THE MESH SHALL BE FOLDED AT THE UPSTREAM SIDE OVER THE AGGREGATE AND TIGHTLY SECURED TO ITSELF ON THE DOWNSTREAM SIDE USING WIRE TIES OR HOG RINGS. IN STREAM USE, THE MESH SHOULD BE SECURED OR STAKED TO THE STREAM BED PRIOR TO AGGREGATE PLACEMENT.
9. SACK GABIONS SHOULD BE STAKED DOWN WITH 3 / 4" DIA. REBAR STAKES.
10. FLOW OUTLET SHOULD BE ONTO A STABILIZED AREA (VEGETATION, ROCK, ETC.).
11. THE GUIDELINES SHOWN HEREON ARE SUGGESTIONS ONLY AND MAY BE MODIFIED BY THE ENGINEER.

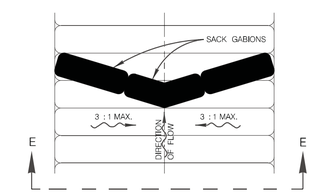

PLAN VIEW

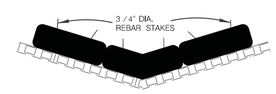

SECTION E-E

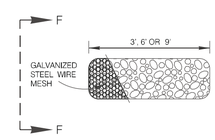

TYPE 4 SACK GABION DETAIL

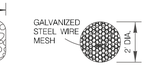

SECTION F-F

0 10' 20'
SCALE: 1" = 20' H
FULL SCALE

0 20' 40'
SCALE: 1" = 40' H
HALF SCALE

TYPE 4 FILTER DAM AT DITCHES & SMALLER CHANNELS PLAN VIEW

ROCK FILTER DAMS

CHARLES M. SHINE 62999 STATE OF TEXAS
11-7-2014

IDC Planners - Engineers - Program Managers

RIALTO STUDIO
Rialto Studio, Inc.
Landscape Architecture
2200 Jackson Ave. Ste. 100
San Antonio, Texas 78213
P 210.826.1100
F 210.826.1108

Date: Revisions/Submissions

CITY OF SAN ANTONIO
TRANSPORTATION & CAPITAL IMPROVEMENTS

CITY OF SAN ANTONIO
TRANSPORTATION AND CAPITAL IMPROVEMENTS (TCI)
MUNICIPAL PLAZA BUILDING
114 W. Commerce P.O. BOX 839966
San Antonio, Texas 78283-3966
TEL. (210) 207-2879 FAX (210) 207-2197

GOLD CANYON PARK
San Antonio, Texas
Construction Plans
DETAILED STORM WATER POLLUTION PREVENTION PLAN

C201

Drawn By:	Designed By:
KA	CS

Date: November 06, 2014
Project No. : 422-0300
Filename:

korrmo
10:29:33 AM
11/6/2014
\\Cosa96-1\share\Transportation\CDSA\Gold Canyon\CADD\ENVIRONMENTAL\GOLD_SWPPP_DETAILED.dgn

SITE DESCRIPTION

PROJECT NAME AND LOCATION: Gold Canyon Park; Corporate Woods Drive, San Antonio, Texas

CONTACT AND PHONE NO.: Jamaal Moreno, Phone No: 210–207–6924

PROJECT DESCRIPTION: Project consists on the construction of a parking lot with 12 spaces, 2 trails heads including an exercise area, and a hiking/walking trail within the project limits.

MAJOR SOIL DISTURBING ACTIVITIES: Cut and fill for parking layout, trail heads, and trail profiles. Pavement placement for parking lot and installation of concrete trails ans sidewalks.

TOTAL PROJECT AREA (ACRES): 56.5 ACRES

TOTAL AREA TO BE DISTURBED: 1.54 ACRES

WEIGHTED RUNOFF COEFFICIENT: (AFTER CONSTRUCTION) C = 0.22 (C (unimproved) = 0.2 and C (impervious) = 0.9 at 56.517 Acres and 1.54 Acres respectively.)

EXISTING CONDITION OF SOIL, VEGETATIVE COVER AND % OF VEGETATIVE COVER: Soils consists of Crawford and Bexar Stony Soils (CB), and Terrant Association (TaC) both consisting of stony clay allowing water to move rapidly when soild is dry/cracked but very slow when soil is wet. Vegetation cover is moderately dense to dense stand (approx. 90% veg. cover) with several small open grassy areas.

DESCRIPTION OF WATER DISCHARGED NOT ASSOCIATED WITH CONSTRUCTION: Runoff is discharged and conveyed through West Elm Creek, located within the project limits, which serves as a tributary to the Salado Creek. The Elm Creek discharges into Salado Creek.

NAME OF RECEIVING WATERS: The site is located within the West Elm Creek watershed and the West Elm Creek passes through the project. The ElmCreek will receive discharges from the disturbed areas of the project.

IDENTIFY STORMWATER DISCHARGE POINTS: West Elm Creek discharges downstream to the Elm Creek, Elm Waterhole Creek, Mud Creek, and to Salado Creek.

A DESCRIPTION AND TIME FRAME FOR INSTALLATION OF STABILIZATION PRACTICES IN CONJUNCTION WITH CONSTRUCTION:

EROSION AND SEDIMENTATION CONTROLS

SOIL STABILIZATION PRACTICES:

- ___ HYDROMULCHING
- ___ TEMPORARY SEEDING
- ✓ PERMANENT PLANTING, SODDING OR SEEDING
- ✓ MULCHING
- ___ SOIL RETENTION BLANKET
- ___ BUFFER ZONES
- ✓ PRESERVATION OF NATURAL RESOURSES

OTHER:

DISTURBED AREAS ON WHICH CONSTRUCTION ACTIVITY HAS CEASED TEMPORARILY OR PERMANENTLY, SHALL BE STABILIZED WITHIN 14 DAYS UNLESS ACTIVITIES ARE SCHEDULED TO RESUME AND DONE WITHIN 21 DAYS.

STRUCTURAL PRACTICES:

- ✓ SILT FENCES
- ___ HAY BALES
- ✓ GRAVEL FILTRATION BAGS
- ✓ ROCK BERMS
- ___ DIVERSION, INTERCEPTOR OR PERIMETER DIKES
- ___ DIVERSION, INTERCEPTOR OR PERIMETER SWALES
- ___ DIVERSION, DIKE AND SWALE COMBINATIONS
- ___ PAVED FLUMES
- ✓ ROCK BEDDING AT CONSTRUCTION EXIT (STABILIZED ENTRANCE)
- ___ TIMBER MATTING AT CONSTRUCTION EXIT (STABILIZED ENTRANCE)
- ___ CHANNEL LINERS
- ___ SEDIMENT TRAPS
- ___ SEDIMENT BASINS
- ___ STORM INLET SEDIMENT TRAP
- ___ STONE OUTLET SEDIMENT STRUCTURES
- ___ CURBS AND GUTTERS
- ___ STORM SEWERS
- ___ VELOCITY CONTROL STRUCTURES
- ___ GEOTEXTILES

OTHER:

NARRATIVE – SEQUENCE OF CONSTRUCTION (STORMWATER MANAGEMENT) ACTIVITIES:

THE ORDER OF ACTIVITIES WILL BE AS FOLLOWS: New location with no impact to traffic, except at driveway tie–in with Corporate Drive. All BMP's shown in plans will be installed prior to construction, and will remain until completion of construction.

A DESCRIPTION OF MAINTENANCE PROCEDURES FOR CONTROL MEASURES USED: All BMP's shown in plans will be cleaned or replaced after each rain event or as needed following daily inspections.

STORMWATER MANAGEMENT: Upgradient storm will maintain a natural flow path during all phases of construction.

A DESCRIPTION OF PERMANENT STORM WATER MANAGEMENT CONTROLS: Curbs, Storm Filter Vegetative Filter Strips.

OTHER EROSION AND SEDIMENTATION CONTROLS

MAINTENANCE:

ALL EROSION AND SEDIMENT CONTROLS WILL BE MAINTAINED IN GOOD WORKING ORDER. IF A REPAIR IS NECESSARY, IT WILL BE DONE AT THE EARLIEST DATE POSSIBLE, BUT NO LATER THAN 7 CALENDAR DAYS AFTER THE SURROUNDING EXPOSED GROUND HAS DRIED SUFFICIENTLY TO PREVENT FURTHER DAMAGE FROM HEAVY EQUIPMENT. THE AREAS ADJACENT TO CREEKS AND DRAINAGEWAYS SHALL HAVE PRIORITY, FOLLOWED BY DEVICES PROTECTING STORM SEWER INLETS.

INSPECTION:

AN INSPECTION WILL BE PERFORMED BY THE CONTRACTOR EVERY 14 DAYS AS WELL AS AFTER EVERY 1/2" OR MORE OF RAIN (RECORDED ON A NON–FREEZING RAIN GAUGE TO BE LOCATED AT THE PROJECT SITE). AN INSPECTION AND MAINTENANCE REPORT WILL BE MADE PER INSPECTION, BASED ON THE INSPECTION RESULTS, THE CONTROLS SHALL BE CORRECTED BEFORE THE NEXT SCHEDULED INSPECTION.

WASTE MATERIALS:

ALL WASTE MATERIALS WILL BE COLLECTED AND STORED IN A SECURELY LIDDED METAL DUMPSTER. THE DUMPSTER WILL MEET ALL STATE AND LOCAL CITY SOLID WASTE MANAGEMENT REGULATIONS. ALL TRASH AND CONSTRUCTION DEBRIS FROM THE SITE WILL BE DEPOSITED IN THE DUMPSTER. THE DUMPSTER WILL BE EMPTIED AS NECESSARY OR AS REQUIRED BY LOCAL REGULATION AND THE TRASH WILL BE HAULED TO A LOCAL DUMP. NO CONSTRUCTION MATERIALS WILL BE BURIED ON SITE.

HAZARDOUS WASTE (INCLUDING SPILL REPORTING):

AT A MINIMUM, ANY PRODUCTS IN THE FOLLOWING CATEGORIES ARE CONSIDERED TO BE HAZARDOUS: PAINTS, ACIDS FOR CLEANING MASONRY SURFACES, GASOLINE, MOTOR OIL, CLEANING SOLVENTS, ASPHALT PRODUCTS, CHEMICAL ADDITIVES FOR SOIL STABILIZATION OR CONCRETE CURING COMPOUNDS AND ADDITIVES. IN THE EVENT OF A SPILL WHICH MAY BE HAZARDOUS AND MEETS REPORTING REQUIREMENTS, THE NATIONAL RESPONSE CENTER SHOULD BE CONTACTED AT 800–424–8802, AND ANY REQUIRED CHANGES MADE TO THE SWPPP. IN THE EVENT OF A LIFE THREATENING SPILL THE SAN ANTONIO FIRE DEPARTMENT SHOULD BE NOTIFIED AS WELL AS THE APPROPRIATE CITY INSPECTORS.

SANITARY WASTE

OFFSITE EXCAVATION SOURCE LOCATION

OFFSITE FILL SOURCE LOCATION

OFFSITE VEHICLE TRACKING

- ___ HAUL ROADS DAMPENED FOR DUST CONTROL.
- ___ LOADED HAUL TRUCKS TO BE COVERED WITH TARPAULIN
- ___ EXCESS DIRT ON ROAD TO BE REMOVED DAILY
- ___ STABILIZED CONSTRUCTION ENTRANCE.

OTHER:

CERTIFICATION THAT SITE DISTURBANCE AND / OR DISCHARGES WILL NOT EFFECT LISTED ENDANGERED SPECIES AND THEIR HABITAT.
WHAT METHOD IS USED TO SATISFY THE ENDANGERED SPECIES REQUIREMENTS?

REMARKS:

DISPOSAL AREAS, STOCKPILES AND HAUL ROADS SHALL BE CONSTRUCTED IN A MANNER THAT WILL MINIMIZE AND CONTROL THE AMOUNT OF SEDIMENT THAT ENTERS RECEIVING WATERS. DISPOSAL AREAS SHALL NOT BE LOCATED IN ANY WETLAND, BODY OF WATER, STREAMBED OR FLOODPLAIN. CONSTRUCTION STAGING AREAS AND VEHICLE MAINTENANCE AREAS SHALL BE CONSTRUCTED BY THE CONTRACTOR IN A MANNER TO MINIMIZE THE RUNOFF OF POLLUTANTS. ALL WATERWAYS SHALL BE CLEARED AS SOON AS POSSIBLE OF TEMPORARY EMBANKMENT, TEMPORARY BRIDGES, MATTING, FALSEWORK, PILING, DEBRIS OR OTHER OBSTRUCTION PLACED DURING CONSTRUCTION OPERATIONS THAT ARE NOT PART OF THE FINISHED WORK.

JANUARY 2005

CITY OF SAN ANTONIO
CAPITAL IMPROVEMENTS MANAGEMENT SERVICES DEPARTMENT

STORM WATER POLLUTION PREVENTION PLAN (SWP3) NARRATIVE

% SUBMITTAL	PROJECT NO.:	C202
DRWN. BY: V. VASQUEZ	DSGN. BY: ___ CHKD. BY: ___	

DISCLAIMER: The use of this standard is governed by the "Texas Engineering Practice Act". No warranty of any kind is made by TxDOT for any purpose whatsoever. TxDOT assumes no responsibility for the conversion of this standard to other formats or for incorrect results or damages resulting from its use.

TYPICAL ACCESSIBLE PARKING SPACE DIMENSIONS

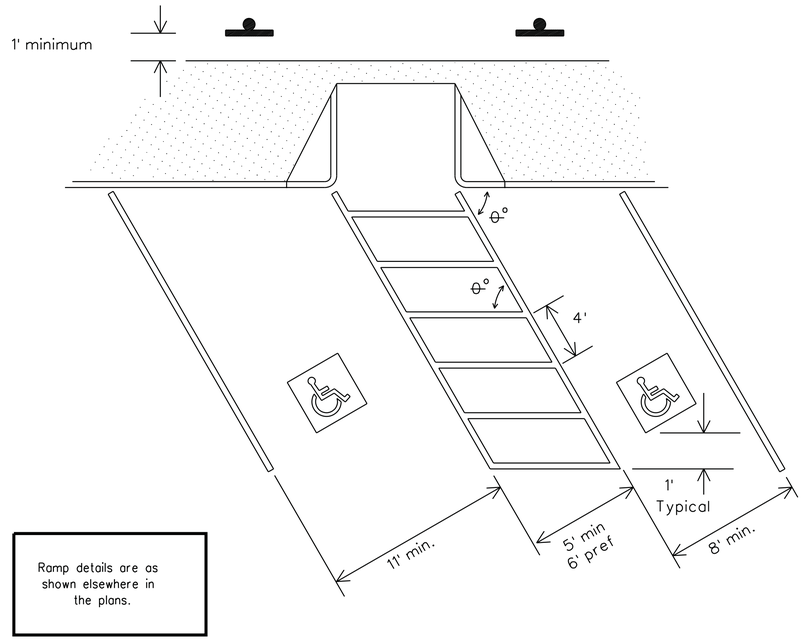

Ramp details are as shown elsewhere in the plans.

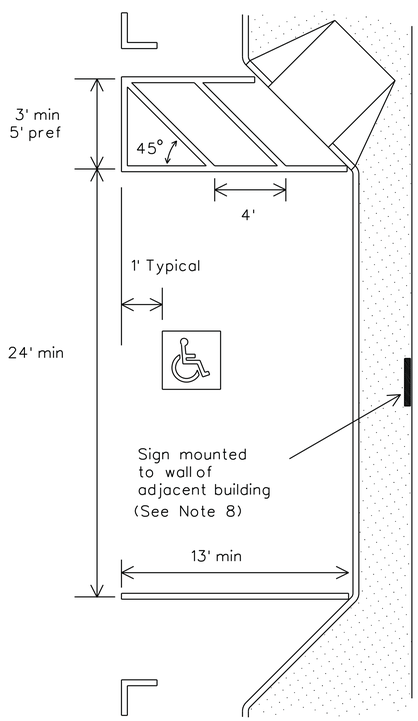

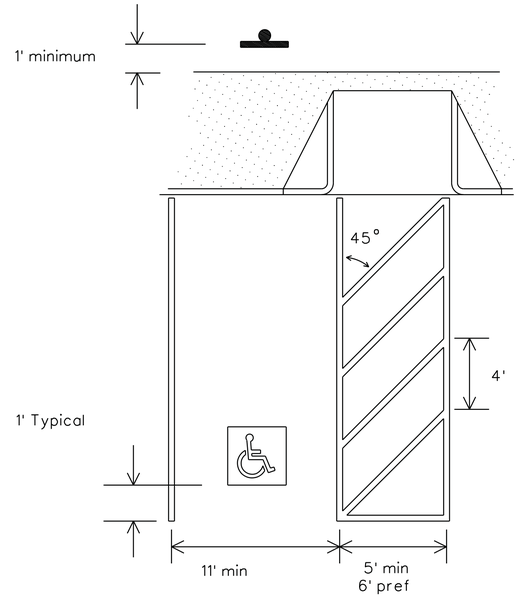

PAVEMENT MARKINGS

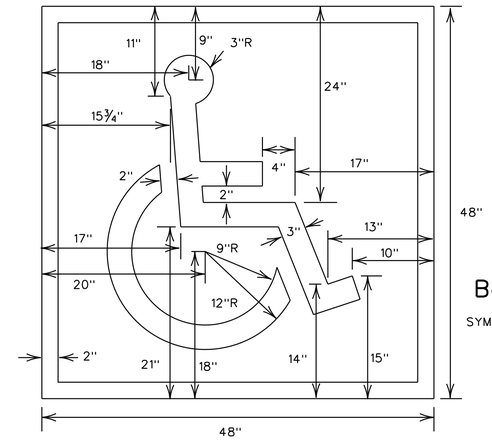

With Background

SYMBOL & BORDER: WHITE
BACKGROUND: BLUE

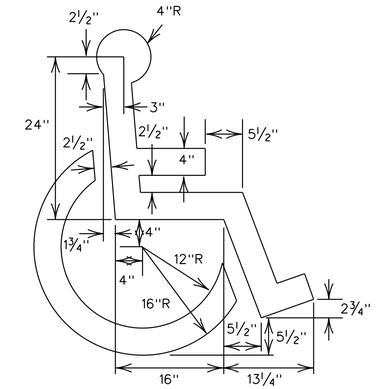

Symbol Only

SYMBOL: BLUE OR WHITE

HANDICAPPED PARKING SIGN

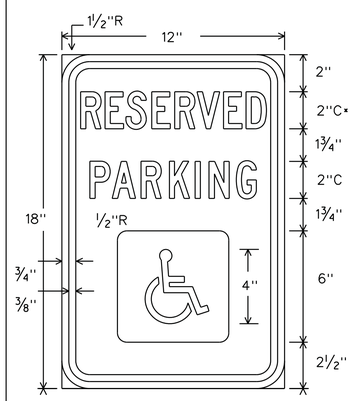

R7-8a

LEGEND AND BORDER: GREEN

WHITE SYMBOL ON BLUE BACKGROUND

BACKGROUND: WHITE

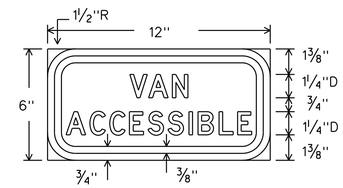

R7-8 plaque

LEGEND AND BORDER: GREEN
BACKGROUND: WHITE

SPECIFICATION REFERENCE TABLE	
MATERIALS AND TESTS DIVISION SPECIFICATIONS	
ALUMINUM SIGN BLANKS	D-9-7110
REFLECTIVE SHEETING, TYPE C (HIGH SPECIFIC INTENSITY)	D-9-8300

GENERAL SIGN NOTES:

The Alphabets and lateral spacing between letters and numerals shall conform with the Texas "Manual on Uniform Traffic Control Devices for Streets and Highways", latest edition, and any approved changes thereto. Lateral spacing of text shall provide a balanced appearance. All materials shall conform to Department Specifications.

Legend shall be applied by screening process of black and/or transparent colored ink, cut-out black vinyl non-reflective decal sheeting and/or reflective sheeting or combination thereof. Background shall be white reflective sheeting (Type C).

Sign blanks shall be one piece 0.08 inch thick sheet aluminum alloy (Type A). unless otherwise noted elsewhere in the plans.

GENERAL NOTES:

1. All parking space limit lines shall be 4" solid white lines.
2. Aisle markings shown are examples only. Other methods to indicate a NO PARKING area are acceptable. Aisle markings shall be white.
3. Dimensions of limit lines, aisle markings, and symbol (with or without background) may vary ± 10%.
4. Pavement marking symbols (with background):
   a) are REQUIRED unless stated elsewhere in the plans,
   b) should be placed toward the far end of the parking spaces so as to be visible to motorists in the travel lane,
   c) may be painted or prefabricated material, and
   d) shall be 30" x 30" minimum.
5. With approval of the Engineer, prefabricated pavement marking symbols with background of other dimensions exceeding the 30" x 30" minimum may be used. Alternative designs shall include a proportion sized symbol of accessibility, and shall conform to the illustrated colors for background, symbol and border.
6. An R7-8 sign:
   a) shall be REQUIRED for each accessible parking space,
   b) shall NOT be placed between two accessible parking spaces,
   c) shall NOT be placed in a location that restricts movement of wheelchairs within the adjacent sidewalk, and
   d) shall have a minimum mounting height of 7 feet. If mounted to wall or located so as not to be near pedestrian traffic minimum mounting height may be 7 feet.
7. Post mounted signs should be placed approximately 1 foot (or greater) behind the curb to prevent damage from vehicle overhang.
8. Signs may be mounted directly to an adjacent wall of a building when post mounting is impractical.

Texas Department of Transportation
Traffic Operations Division

PAVEMENT MARKINGS AND SIGNING FOR ACCESSIBLE PARKING

PM(AP)-98

© TxDOT August 1995

DN: TXDOT	CK: TXDOT	DW: TXDOT	CK: TXDOT
CONT	SECT	JOB	HIGHWAY
DIST		COUNTY	C203

REVISIONS
4-98

DATE:
FILE:

22K

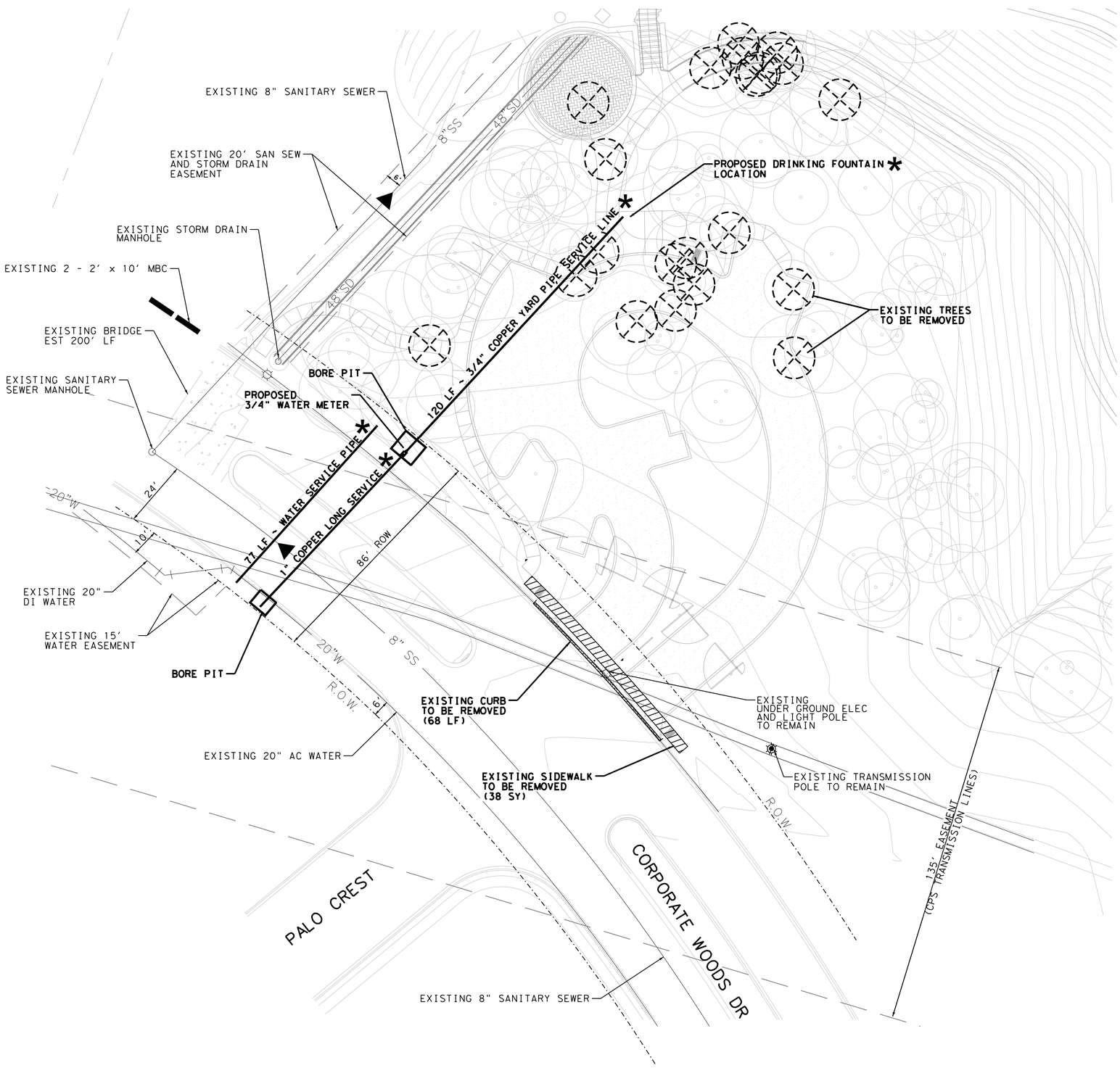

LEGEND:

- R.O.W.
- EXISTING EASEMENT
- PROPOSED WATER SERVICE LINE
- SIDEWALK TO BE REMOVE
- CURB TO BE REMOVE
- TREES TO BE REMOVE

ADD ALTERNATIVE #3

0 10' 20'
SCALE: 1" = 20' H
FULL SCALE

0 20' 40'
SCALE: 1" = 40' H
HALF SCALE

GENERAL NOTES

1. FOR 1" SERVICE LINE, MINIMUM BURY DEPTH SHALL BE 3 FEET.
2. FOR NEW COPPER YARD PIPING, MINIMUM COVER SHALL BE 12". THE INSTALLATION SHALL BE IN THE MOST DIRECT AND PRACTICABLE ALIGNMENT.
3. METER BOX SHALL BE SET 7' - 0" (TO THE CENTER) BEHIND THE BACK OF CURB.
4. * DRINKING FOUNTAIN/UTILITY PLANS ARE ADD ALTERNATIVE #3 BID ITEMS.
5. FOR DRINKING FOUNTAIN SEE SHEET L203, DETAIL 4.

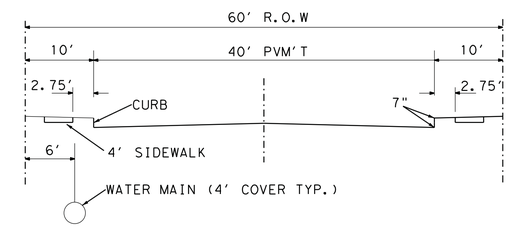

TYPICAL STREET SECTION

CHARLES M. SHINE
62999
11-7-2014

IDC
Planners - Engineers - Program Managers

RIALTO STUDIO
Rialto Studio, Inc.
Landscape Architecture
2235 Jackson Ave. Ste. 100
San Antonio, Texas 78213
P 210.826.2100
F 210.826.2108

Date: Revisions/Submissions

CITY OF SAN ANTONIO
TRANSPORTATION & CAPITAL IMPROVEMENTS

CITY OF SAN ANTONIO
TRANSPORTATION AND CAPITAL IMPROVEMENTS (TCI)
MUNICIPAL PLAZA BUILDING
114 W. Commerce P.O. BOX 839966
San Antonio, Texas 78283-3966
TEL. (210) 207-2879 FAX (210) 207-2197

GOLD CANYON PARK
San Antonio, Texas
Construction Plans

CIVIL UTILITY/DEMO PLAN

C300

Drawn By:	Designed By:
KA	CS

Date: November 06, 2014
Project No. : 422-0300
Filename:

Kgreene
10:32:47 AM
11/6/2014
\\SS-NWB-1\shared\Transportation\GOSA\Gold Canyon\CADD\UTILITIES\GOLD_OVERALL UTILITY.dgn

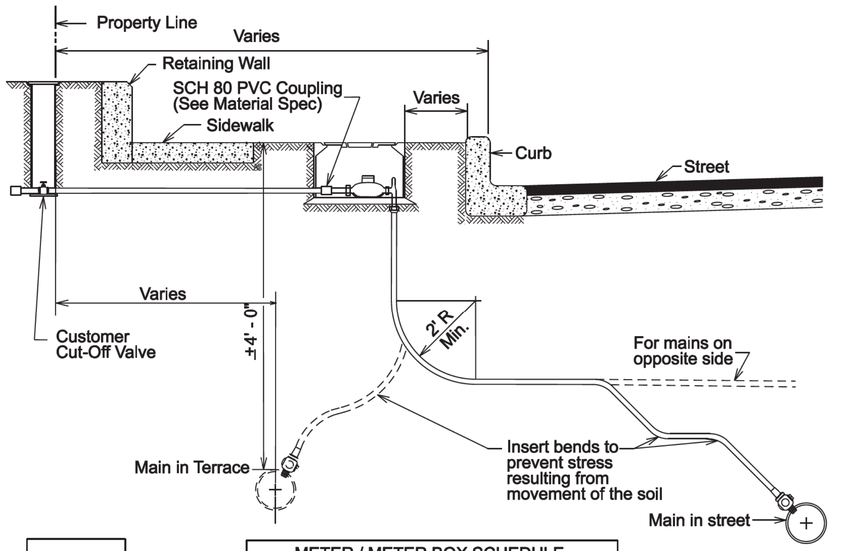

Insulation Coupling Component
579 - 3/4"
1580 - 1"

METER / METER BOX SCHEDULE	
Meter Size	Meter Box
5/8", 3/4" & 1"	C.I. Oval, SAWS Material Specification 10-30

Note:
See Tapping Schedule
DD-824-01 Sheet 3 of 3

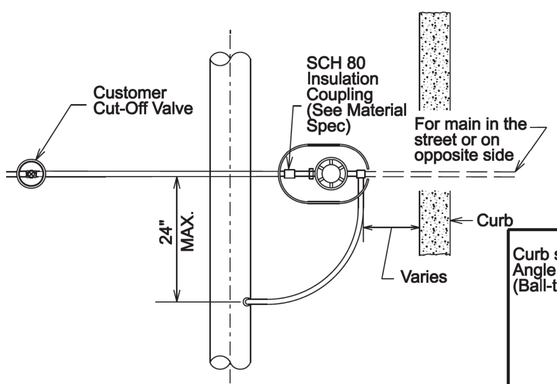

IMPROVED STREET

5/8" THRU 1" SERVICE

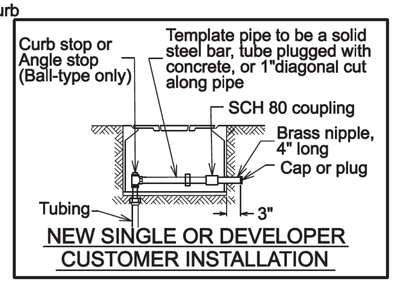

NEW SINGLE OR DEVELOPER CUSTOMER INSTALLATION

PROPERTY OF SAN ANTONIO WATER SYSTEM SAN ANTONIO, TEXAS	COPPER SERVICE INSTALLATION MAIN IN TERRACE	APPROVED	REVISED
		MARCH 2008	APRIL 2014
		DD-824-01	SHEET 1 OF 3

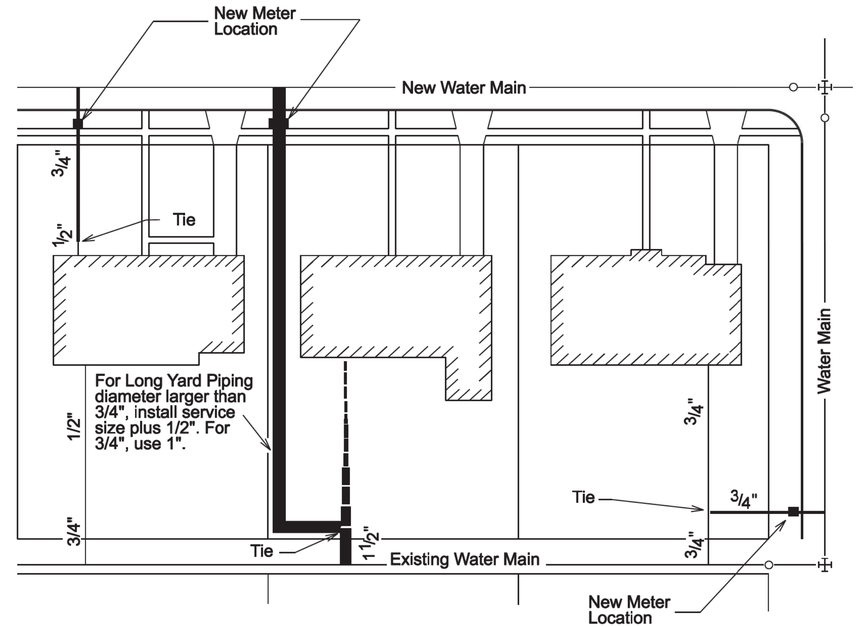

Notes:

1. Customer's yard piping consists of water supply piping and appurtenances between the customer's side of the Cut-Off Valve and the nearest point of the largest existing connection within the customer's property.
2. Yard piping alignment shall be established in the field by Inspector.
3. Existing customer's yard piping to the abandoned main shall be cut and capped inside the customer's property.
4. Yard piping pay item:
   A. Short Yard Piping: When yard piping is less than 1/2 the depth of the lot.
   B. Long Yard Piping: When yard piping is more than 1/2 the depth of the lot.
5. Install SCH 80 PVC Coupling at the location where dissimilar pipe material is encountered.

PROPERTY OF SAN ANTONIO WATER SYSTEM SAN ANTONIO, TEXAS	RELOCATE SERVICE AND RECONNECTION OF CUSTOMER'S YARD PIPING	APPROVED	REVISED
		MARCH 2008	APRIL 2014
		DD-822-01	SHEET 1 OF 1

STATE OF TEXAS
CHARLES M. SHINE
62999
LICENSED
PROFESSIONAL ENGINEER
Charles M. Shine P.E.
11-7-2014

IDC
Planners - Engineers - Program Managers

RIALTO STUDIO
Rialto Studio, Inc.
Landscape Architecture
2100 Broadway, Ste. 100
San Antonio, TX 78215
P 210.828.1200
F 210.828.1208

Date: Revisions/Submissions

CITY OF SAN ANTONIO
TRANSPORTATION & CAPITAL IMPROVEMENTS

CITY OF SAN ANTONIO
TRANSPORTATION AND CAPITAL IMPROVEMENTS (TCI)
MUNICIPAL PLAZA BUILDING
114 W. Commerce P.O. BOX 839966
San Antonio, Texas 78283-3966
TEL. (210) 207-2879 FAX (210) 207-2197

GOLD CANYON PARK
San Antonio, Texas
Construction Plans

CIVIL UTILITY DETAILS

C301

Drawn By:	Designed By:
KA	CS

Date:
November 06, 2014
Project No. :
422-0300
Filename:

Kgreno
10:34:04 AM
11/6/2014
\\Sc-ad8-1\sanan\Transportation\GOSA\Gold Canyon\CADD\UTILITIES\GOLD_OVERALL UTILITY DETAILS.dgn

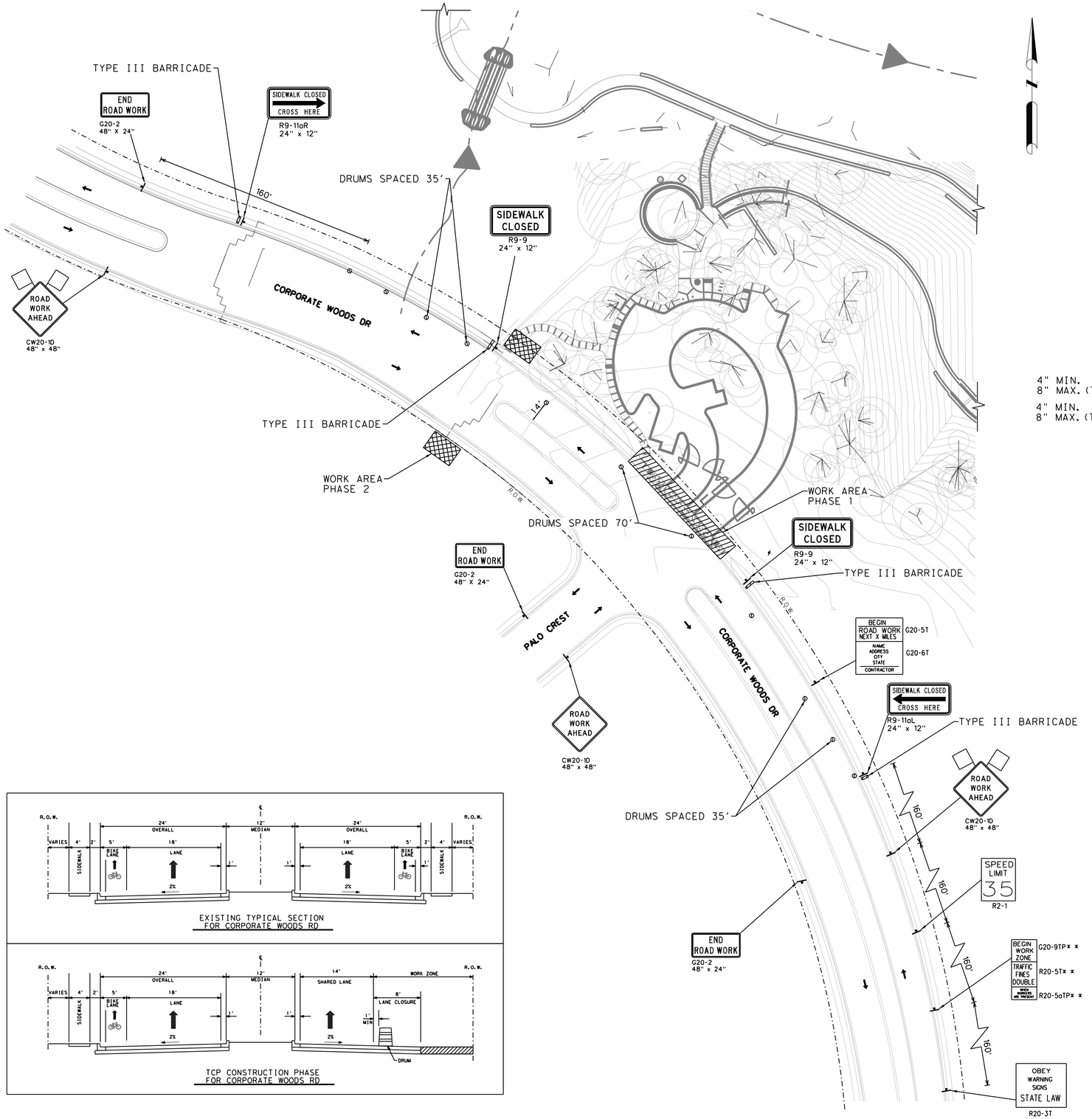

LEGEND:

- R.O.W.
- TRAFFIC FLOW ARROW
- PLASTIC DRUM
- TYPE III BARRICADE
- CONSTRUCTION WARNING SIGN
- CONSTRUCTION PHASE 1
- WORK AREA PHASE 1
- WORK AREA PHASE 2

PLASTIC DRUMS

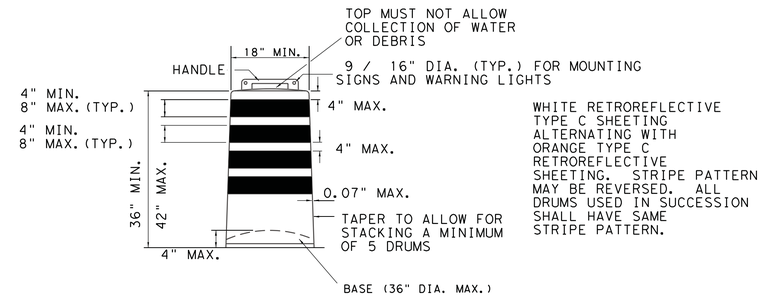

1. Drums and all related items shall comply with the requirements of the current version of the "Texas Manual on Uniform Traffic Control Devices" (TMUTCD) and the "Compliant Work Zone Traffic Control Devices List" (CWZTCD).
2. Drums, bases, and related materials shall exhibit good workmanship and shall be free from objectionable marks or defects that would adversely affect their appearance or serviceability.
3. The Engineer/Inspector shall provide written notice to the Contractor regarding the replacement of drums or other traffic control devices. The Contractor shall have a maximum of 24 hours to replace any plastic drums or other traffic control devices identified for replacement by the Engineer/Inspector. The replacement device must be an approved device.
4. Each drum must have a 40 lb. rubber or plastic snap on.
5. No signs larger than 18" X 24" will be allowed to be mounted on plastic drums.
6. No warning lights will be allowed to be mounted on plastic barrels.
7. In lieu of a warning light, a yellow reflector will be acceptable.

0 20' 40'
SCALE: 1" = 40' H
FULL SCALE

0 40' 80'
SCALE: 1" = 80' H
HALF SCALE

CHARLES M. SHINE
62999
11-7-2014

IDC
Planners - Engineers - Program Managers

RIALTO STUDIO
Rialto Studio, Inc.
Landscape Architecture
2506 Broadway San Antonio, Texas 78215
P 210.828.1300
F 210.828.1308

Date: Revisions/Submissions

CITY OF SAN ANTONIO
TRANSPORTATION & CAPITAL IMPROVEMENTS

CITY OF SAN ANTONIO
TRANSPORTATION AND CAPITAL IMPROVEMENTS (TCI)
MUNICIPAL PLAZA BUILDING
114 W. Commerce P.O. BOX 839966
San Antonio, Texas 78283-3966
TEL. (210) 207-2879 FAX (210) 207-2197

GOLD CANYON PARK
San Antonio, Texas
Construction Plans
TRAFFIC CONTROL PLAN

C400

Drawn By:	Designed By:
KA	CS

Date: November 06, 2014
Project No.: 422-0300
Filename:

korenko
10:37:10 AM
11/10/2014
\\tcdcs04-1\share\Transportation\CDS4\Gold Canyon\CADD\GENERAL\GOLD_TCP.dgn

TRAFFIC ENGINEERING STANDARDS
TYPICAL CROSSWALK DETAILS

TWO LANES WITH SHOULDERS

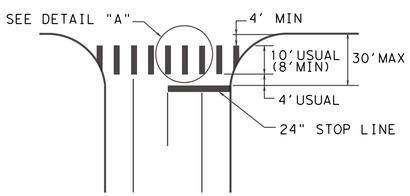

DETAIL "A"

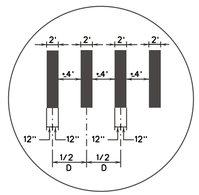

NOTES:

1. CROSSWALKS AND STOP LINES SHALL BE WHITE.
2. "D" IS EQUAL TO ONE HALF THE WIDTH OF TRAVEL LANE.

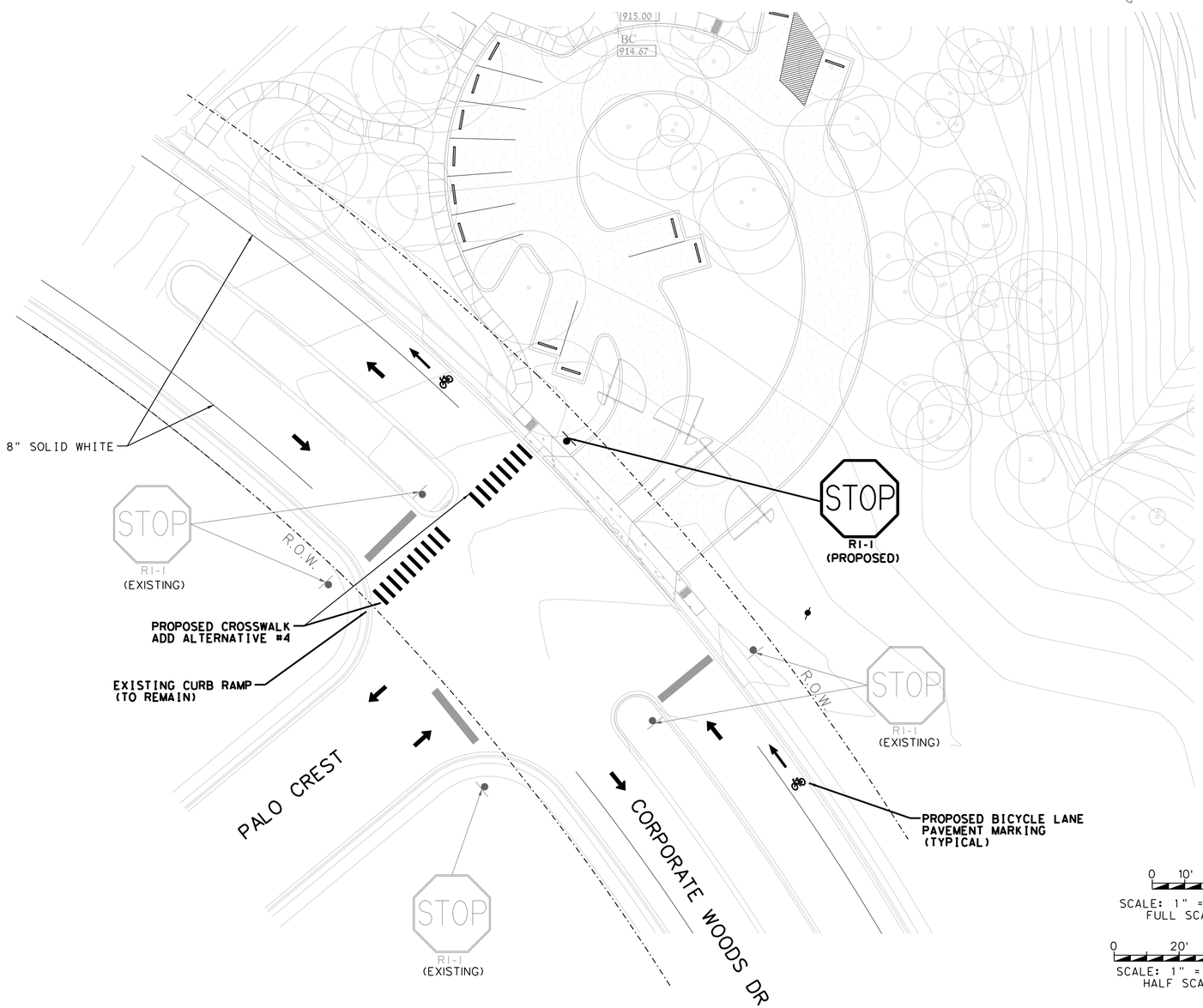

0 10' 20'
SCALE: 1" = 20' H
FULL SCALE

0 20' 40'
SCALE: 1" = 40' H
HALF SCALE

TRAFFIC SIGN STANDARDS

GENERAL NOTES AND GROUND SIGN MOUNTING

TYPICAL GROUND SIGN INSTALLATION

TYPE "U" MOUNT

PERFORATED SQUARE METAL TUBING (DRIVEABLE)

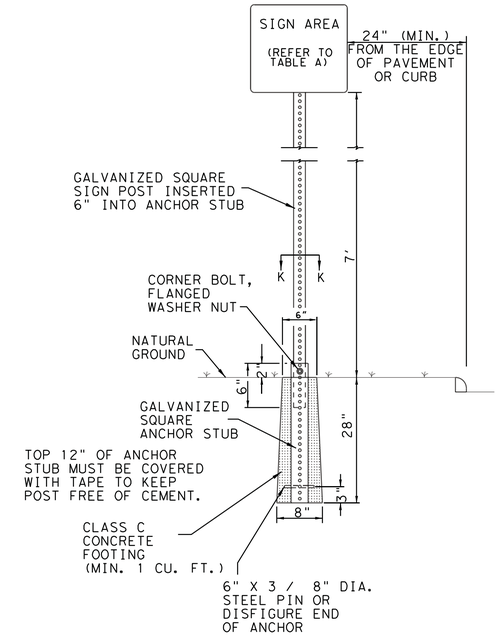

LEGEND:

- R.O.W.
- TRAFFIC FLOW ARROW
- TRAFFIC SIGN

ADJACENT TO TRAVEL LANE

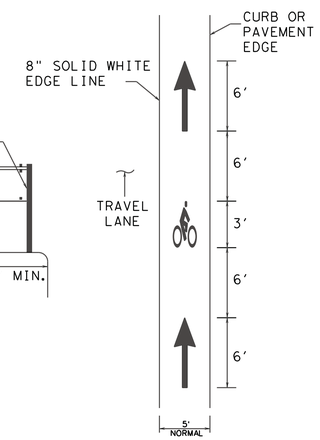

NO PARKING ALONG BICYCLE LANE

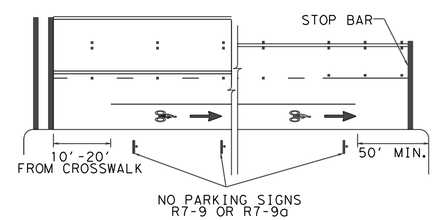

NOTES:

1. ALL PAVEMENT MARKINGS SHALL BE WHITE EXCEPT WHEN NOTED OTHERWISE.
2. PAVEMENT MARKINGS SHALL BE OF THE MATERIALS SPECIFIED AND SHALL BE IN CONFORMANCE WITH MATERIAL SPECIFICATIONS AS SPECIFIED BY CITY OF SAN ANTONIO STANDARD SPECIFICATIONS.
3. EXACT SIGN PLACEMENT AND DETAILS ARE SHOWN ELSEWHERE IN THE PLANS.
4. ADDITIONAL REFERENCES: TMUTCD
   GUIDE FOR THE DEVELOPMENT OF BICYCLES FACILITIES, AASHTO, 1991.

STATE OF TEXAS
CHARLES M. SHINE
62999
LICENSED
PROFESSIONAL ENGINEER
11-7-2014

IDC
Planners - Engineers - Program Managers

RIALTO STUDIO
Rialto Studio, Inc.
Landscape Architecture
2338 Jackson Ave. Ste. M-100
San Antonio, Texas 78213
P 210.828.1388
F 210.828.1389

Date: Revisions/Submissions

CITY OF SAN ANTONIO
TRANSPORTATION & CAPITAL IMPROVEMENTS

CITY OF SAN ANTONIO
TRANSPORTATION AND CAPITAL IMPROVEMENTS (TCI)
MUNICIPAL PLAZA BUILDING
114 W. Commerce P.O. BOX 839966
San Antonio, Texas 78283-3966
TEL. (210) 207-2879 FAX (210) 207-2197

GOLD CANYON PARK
San Antonio, Texas
Construction Plans

TRAFFIC PLAN

C401

Drawn By:	Designed By:
KA	CS

Date:
November 06, 2014

Project No. :
422-0300

Filename:

kgreene
10:39:08 AM
11/6/2014
\\bc-sa8-1\share\transportation\CDSA\Gold Canyon\CADD\GENERAL\GOLD_TRAFFIC PLAN.dgn

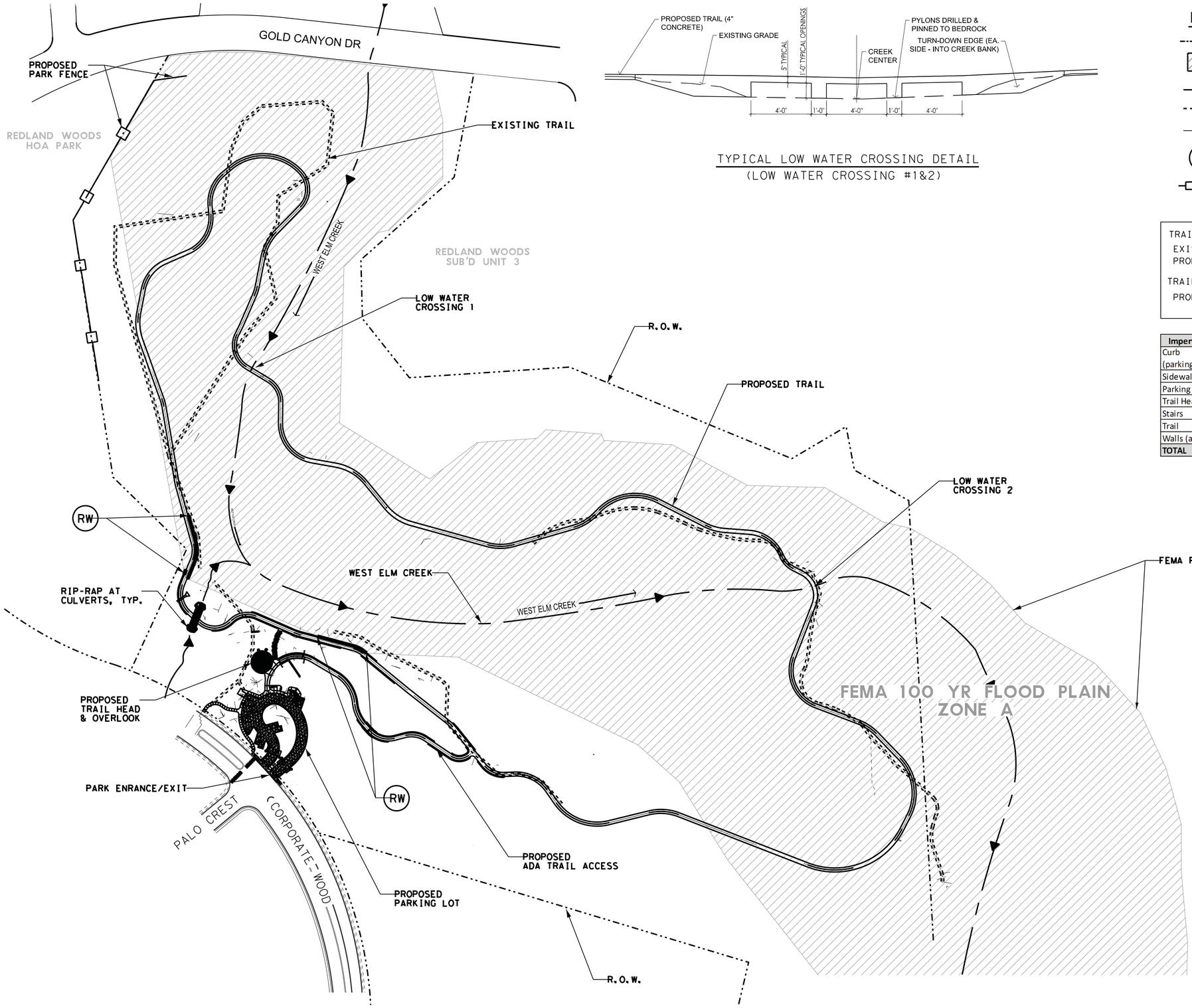

TYPICAL LOW WATER CROSSING DETAIL
(LOW WATER CROSSING #1&2)

LEGEND:

- PROPERTY LINE
- ZONE A FEMA 100 YEAR FLOOD PLAIN
- PROPOSED TRAIL
- EXISTING TRAIL
- FLOW LINE OF FLOODWAY
- RW — RETAINING WALL (INSIDE FLOODPLAIN)
- PROPOSED PARK FENCE

TRAILS WITHIN FEMA FLOOD PLAIN
EXIST TRAIL - 3,619 LF
PROP TRAIL - 3,946 LF 31,568.76 SF

TRAILS OUTSIDE FEMA FLOOD PLAIN
PROP TRAIL - 1772 LF 14,179.46 SF

Impervious Area Outside the Flood Plain		
Curb (parking)	SF	710.29
Sidewalk	SF	3,408.78
Parking Lot	SF	10,166.00
Trail Head	SF	1,407.95
Stairs	SF	509.37
Trail	SF	14,179.46
Walls (along trail)	SF	2,855.84
TOTAL	**SF**	**33,237.69**

0 50' 100'
SCALE: 1" = 100' H
FULL SCALE

0 100' 200'
SCALE: 1" = 200' H
HALF SCALE

STATE OF TEXAS
CHARLES M. SHINE
62999
LICENSED
PROFESSIONAL ENGINEER
11-7-2014

IDC
Planners - Engineers - Program Managers
RIALTO STUDIO
Rialto Studio, Inc.
Landscape Architecture
2200 Broadway, Ste. 3A-100
San Antonio, Texas 78215
P 210.828.1300
F 210.828.1308

Date: Revisions/Submissions

CITY OF SAN ANTONIO
TRANSPORTATION & CAPITAL IMPROVEMENTS

CITY OF SAN ANTONIO
TRANSPORTATION AND CAPITAL IMPROVEMENTS (TCI)
MUNICIPAL PLAZA BUILDING
114 W. Commerce P.O. BOX 839966
San Antonio, Texas 78283-3966
TEL. (210) 207-2879 FAX (210) 207-2197

GOLD CANYON PARK
San Antonio, Texas
Construction Plans
FEMA DRAINAGE AREA EXHIBIT

C500

Drawn By:	Designed By:
KA	CS

Date: November 06, 2014
Project No. : 422-0300
Filename:

karamo
12:02:02 PM
11/6/2014
\\ccsa-ms8-1\shares\Transportation\CDSA\Gold Canyon\GADD\DRAINAGE\GOLD_DRAIN.dgn

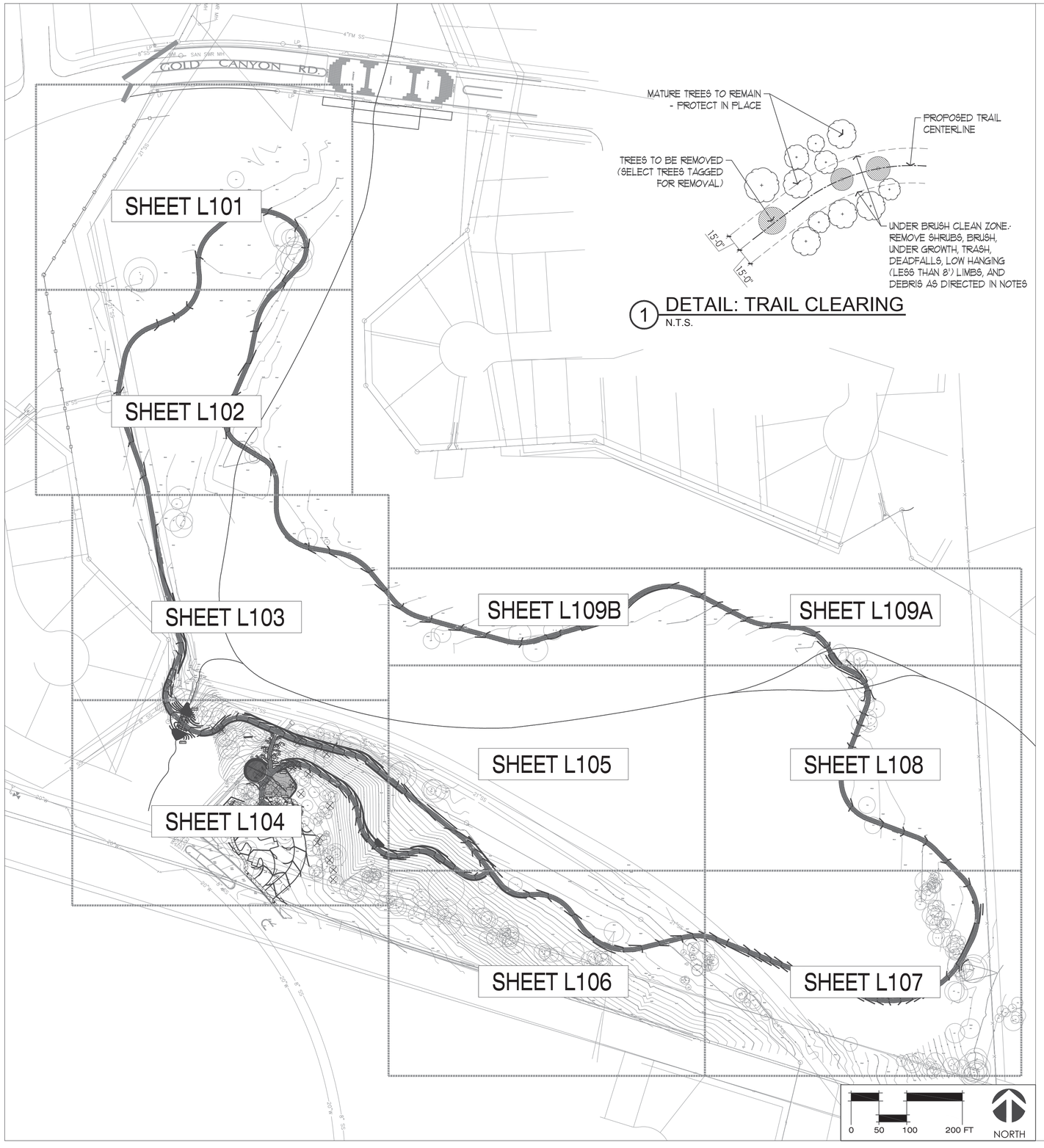

1 DETAIL: TRAIL CLEARING
N.T.S.

LEGEND
(FOR SITE PLAN ENLARGEMENT SHEETS)

+ 100 EXISTING SPOT ELEV.
+ 100 PROPOSED SPOT ELEV.
00 EXISTING CONTOUR LINE

EXISTING TREE (TO BE REMOVED)

EXISTING TREE TO BE SAVED - NO TREE PROTECTION REQD.

EXISTING TREE TO BE SAVED - W/ ROOT PROTECTION FENCING AND MULCH

EXISTING TREE TO BE SAVED - W/ 2x4 TRUNK PROTECTION

TRAIL

FENCE

SELECTIVE CLEARING FOR AESTHETIC AND WATER QUALITY ENHANCEMENT TO BE DIRECTED IN FIELD BY L.A.

SELECTIVE CLEARING FOR AESTHETIC AND WATER QUALITY ENHANCEMENT TO BE DIRECTED IN FIELD BY L.A.

SELECTIVE CLEARING FOR AESTHETIC AND WATER QUALITY ENHANCEMENT TO BE DIRECTED IN FIELD BY L.A.

DETAIL KEYS

4 — DETAIL NUMBER
L202 — DETAIL SHEET

ADD ALTERNATE #1 EXERCISE EQUIPMENT SCHEDULE
www.outdoor-fitness.com

ITEM	QTY.
BACK EXTENSION	1
DUAL EXERCISE BARS	1
HIP TWISTER	1
POMMEL HORSE	1
PULL-UP BARS	1
PUSH-UP BARS	1
SELF-WEIGHTED ROLLER	1
SIT-UP BENCH	1
STRENGTH & STRETCH BARS	1
UNEVEN BARS	1

EQUIP. INSTALLATION NOTES

1. PRUNE TREE LIMBS CLEAR TO 8 FEET HT. OR AS DIRECTED BY LANDSCAPE ARCHITECT. CLEAR AREA OF ROOTS, FALLEN LIMBS, OTHER DEBRIS AND ROCKS (GREATER THAN 1" DIAMETER).
2. INSTALL EXERCISE EQUIPMENT PER MANUFACTURER'S INSTRUCTION AS DIRECTED BY LANDSCAPE ARCHITECT.
3. INSTALL ENGINEERED WOOD FIBER ("KIDDIE CUSHION" BY NEW EARTH SOILS & COMPOST, SAN ANTONIO, TEXAS, OR APPROVED AND ACCEPTED EQUAL) TO 6" COMPACTED DEPTH OVER 2" LAYER OF 1.25" DIA. WASHED AGGREGATE. SEPARATE WOOD FIBER, AGGREGATE AND SOIL WITH FILTER FABRIC (SUBMIT FOR L.A. APPROVAL).
4. BRING COMPACTED ENGINEERED WOOD FIBER TO GRADES INDICATED ON PLANS. INTENT IS TO MATCH TOP OF CONCRETE AND WALL SURFACES WITH MAX. 2% SLOPE TO DRAIN.

GENERAL CONSTRUCTION NOTES

1. PORTIONS OF THE PARK MAY BE RELEASED FOR PUBLIC USE PRIOR TO CLOSE OF CONTRACT. THE CONTRACTOR WILL BE RESPONSIBLE FOR BARRICADES AND SIGNAGE TO ENSURE SAFETY OF THE GENERAL PUBLIC AT ALL TIMES. THE CONTRACTOR SHALL MONITOR CONSTRUCTION ACCESS AND EGRESS TO PROVIDE SAFE PASSAGE OF THE PUBLIC TO NON-WORK RELATED AREAS.
2. THE CONTRACTOR IS RESPONSIBLE FOR VERIFYING THE ACCURACY OF INFORMATION HEREIN AND REPORTING ANY DISCREPANCY OR CONDITION(S) THAT MIGHT AFFECT INSTALLATION OF THE INTENDED IMPROVEMENTS PRIOR TO BEGINNING CONSTRUCTION.
3. THE CONTRACTOR SHALL NOTIFY THE LANDSCAPE ARCHITECT OF ANY QUESTIONS THAT MAY ARISE CONCERNING THE INTENT, PLACEMENT, OR LIMITS OR DIMENSIONS NECESSARY FOR THE CONSTRUCTION OF PROJECT IMPROVEMENTS.
4. PRIOR TO MAKING ANY EXCAVATION, THE CONTRACTOR SHALL PREPARE A STORM WATER POLLUTION ABATEMENT PLAN, INSTALL POLLUTION PREVENTION MATERIALS, INSTALL TREE PROTECTION MATERIALS, AND CONTACT ALL UTILITY COMPANIES FOR LOCATION OF UNDERGROUND UTILITIES. THE CONTRACTOR SHALL TAKE STEPS NECESSARY TO PROTECT EXISTING UTILITIES AT ALL TIMES.

GENERAL NOTES

1. CONTRACTOR SHALL NOTIFY LANDSCAPE ARCHITECT OF ANY EXISTING CONDITIONS THAT WILL PREVENT CONSTRUCTION AS DETAILED.
2. ALL ROW DIMENSIONS SHALL BE VERIFIED ON SITE. NOTIFY THE LANDSCAPE ARCHITECT IF THERE ARE ANY DISCREPANCIES BEFORE PROCEEDING WITH THE WORK.
3. CONTRACTOR SHALL IMMEDIATELY NOTIFY THE LANDSCAPE ARCHITECT OF ANY QUESTIONS THAT MAY ARISE CONCERNING THE INTENT, PLACEMENT, OR LIMITS OF DIMENSIONS NECESSARY FOR THE CONSTRUCTION OF THIS PROJECT.
4. PRIOR TO MAKING ANY EXCAVATION, CONTACT ALL UTILITY COMPANIES TO LOCATE UNDERGROUND UTILITIES.
5. CONTRACTOR SHALL TAKE ALL STEPS NECESSARY TO PROTECT EXISTING UTILITIES AT ALL TIMES.
6. ANY EXISTING SITE IMPROVEMENT OR UTILITY REMOVED, DAMAGED OR UNDERCUT BY CONTRACTOR'S OPERATIONS SHALL BE REPAIRED OR REPLACED AS DIRECTED BY THE OWNER'S REPRESENTATIVE AND APPROVED BY THE RESPECTIVE UTILITY AT THE CONTRACTOR'S EXPENSE.
7. CONTRACTOR SHALL BE RESPONSIBLE FOR RESTORING TO ITS ORIGINAL OR BETTER CONDITION ANY DAMAGES DONE TO EXISTING FENCES, CONCRETE, STREET PAVING, CURBS, SHRUBS, BUSHES, DRIVEWAYS, ETC., SCHEDULED TO REMAIN(NO SEPARATE PAY ITEM).

LANDSCAPE PLANTING NOTES

REFERENCE: WATER POLLUTION ABATEMENT PLAN, E100: TO ALL "VEGETATED AREAS" ADD AS FOLLOWS:

4' VEGETATED SHOULDER: "SHADE-FRIENDLY WILDFLOWER MIX" AT 1 POUND PER 1000 SQUARE FEET.

5' AND 6' VEGETATED SHOULDER: "TEXAS-OKLAHOMA NATIVE ROADSIDE MIX" AT 1 POUND PER 1000 SQUARE FEET.

VEGETATED BUFFER: "NATIVE TEXAS MIX" AT 1 POUND PER 1000 SQUARE FEET.
BLEND WITH AND APPLY IN CONJUNCTION WITH ENGINEER'S DESIGNATED SEED MIX. FOLLOW ENGINEER'S RECOMMENDATION ON EROSION CONTROL AND TEMPORARY WATERING.

FOR ALL OTHER AREAS DISTURBED BY CONSTRUCTION ACTIVITIES APPLY AS FOLLOWS (RE: L100- L109):

SHADED AREAS: A MIXTURE OF "SHADE-FRIENDLY WILDFLOWER MIX" AT 1 POUND PER 1000 SQUARE FEET, AND "SHADE-FRIENDLY GRASS MIX" AT 1/2 POUND PER 1000 SQUARE FEET.

SUNNY AREAS: "NATIVE TRAIL MIX" AT 1 POUND PER 1000 SQUARE FEET.

ENSURE ADEQUATE NATIVE SOIL IS PRESENT (MIN. 4" DEPTH) OR INSTALL IMPORTED TOPSOIL TO MIN. 4" DEPTH PRIOR TO SEEDING. REMOVE DEBRIS AND ROCKS GREATER THAN 1" DIAMETER, FINE GRADE, BROADCAST SEED AT RATES SPECIFIED, LIGHTLY RAKE TO INCORPORATE, AND DUST WITH 1" DEPTH DOUBLE SHREDDED NATIVE HARDWOOD MULCH. FOLLOW ENGINEER'S RECOMMENDATION ON EROSION CONTROL AND TEMPORARY WATERING.

ALL SEED MIXES AS SUPPLIED BY NATIVE AMERICAN SEED, JUNCTION, TEXAS 800.728.4043, OR APPROVED AND ACCEPTED EQUAL. SUPPLY GUARANTEED ANALYSIS AND PROOF OF PURCHASE (INCLUDING QUANTITY) AT SUBSTANTIAL COMPLETION FOR VERIFICATION.

REGISTERED LANDSCAPE ARCHITECT
STEVEN F. ALLEN
622
STATE OF TEXAS
11/7/2014

IDC
Planners · Engineers · Program Managers

RIALTO STUDIO
Rialto Studio, Inc.
Landscape Architecture
2425 Broadway, Suite 105
San Antonio, Texas 78215
P. 210.828.1195
F. 210.828.1396

Date:	Revisions/Submissions

CITY OF SAN ANTONIO
TRANSPORTATION & CAPITAL IMPROVEMENTS

CITY OF SAN ANTONIO
CAPITAL IMPROVEMENTS
MANAGEMENT SERVICES DIVISION
MUNICIPAL PLAZA BUILDING
114 W. Commerce P.O. BOX 839966
San Antonio, Texas 78283-3966
TEL. (210) 207-2879 FAX (210) 207-2197

GOLD CANYON PARK
San Antonio, Texas
Construction Plan Set
LANDSCAPE SITE PLAN
OVERALL

L100

Drawn By:	Designed By:
SFA	SFA

Date:
November 7, 2014
Project No. :
RSI-1306
Filename:

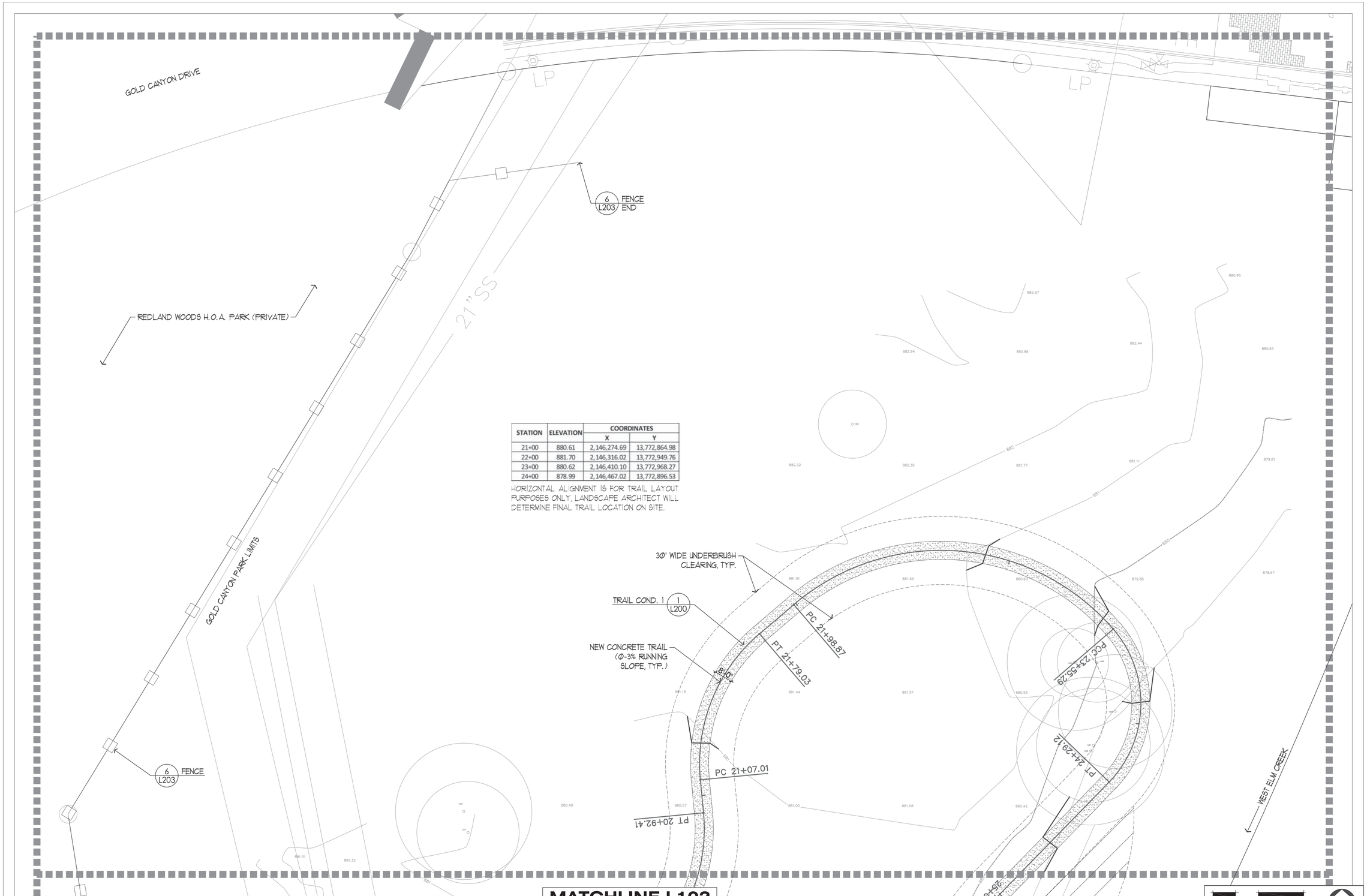

STATION	ELEVATION	COORDINATES	
		X	Y
21+00	880.61	2,146,274.69	13,772,864.98
22+00	881.70	2,146,316.02	13,772,949.76
23+00	880.62	2,146,410.10	13,772,968.27
24+00	878.99	2,146,467.02	13,772,896.53

HORIZONTAL ALIGNMENT IS FOR TRAIL LAYOUT PURPOSES ONLY, LANDSCAPE ARCHITECT WILL DETERMINE FINAL TRAIL LOCATION ON SITE.

REGISTERED LANDSCAPE ARCHITECT
JEFF W. SCHUTZ
622
STATE OF TEXAS
11/7/2014

IDC
Planners · Engineers · Program Managers

RIALTO STUDIO
Rialto Studio, Inc.
Landscape Architecture
2425 Broadway, Suite 105
San Antonio, Texas 78215
p 210.828.1166
f 210.828.1346

Date:	Revisions/Submissions

CITY OF SAN ANTONIO
TRANSPORTATION & CAPITAL IMPROVEMENTS

CITY OF SAN ANTONIO
CAPITAL IMPROVEMENTS
MANAGEMENT SERVICES DIVISION
MUNICIPAL PLAZA BUILDING
114 W. Commerce P.O. BOX 839966
San Antonio, Texas 78283-3966
TEL. (210) 207-2879 FAX (210) 207-2197

GOLD CANYON PARK
San Antonio, Texas
Construction Plan Set
LANDSCAPE SITE PLAN
ENLARGEMENT

L101

Drawn By:	Designed By:
SFA	SFA

Date:
November 7, 2014
Project No. :
RSI-1306
Filename:

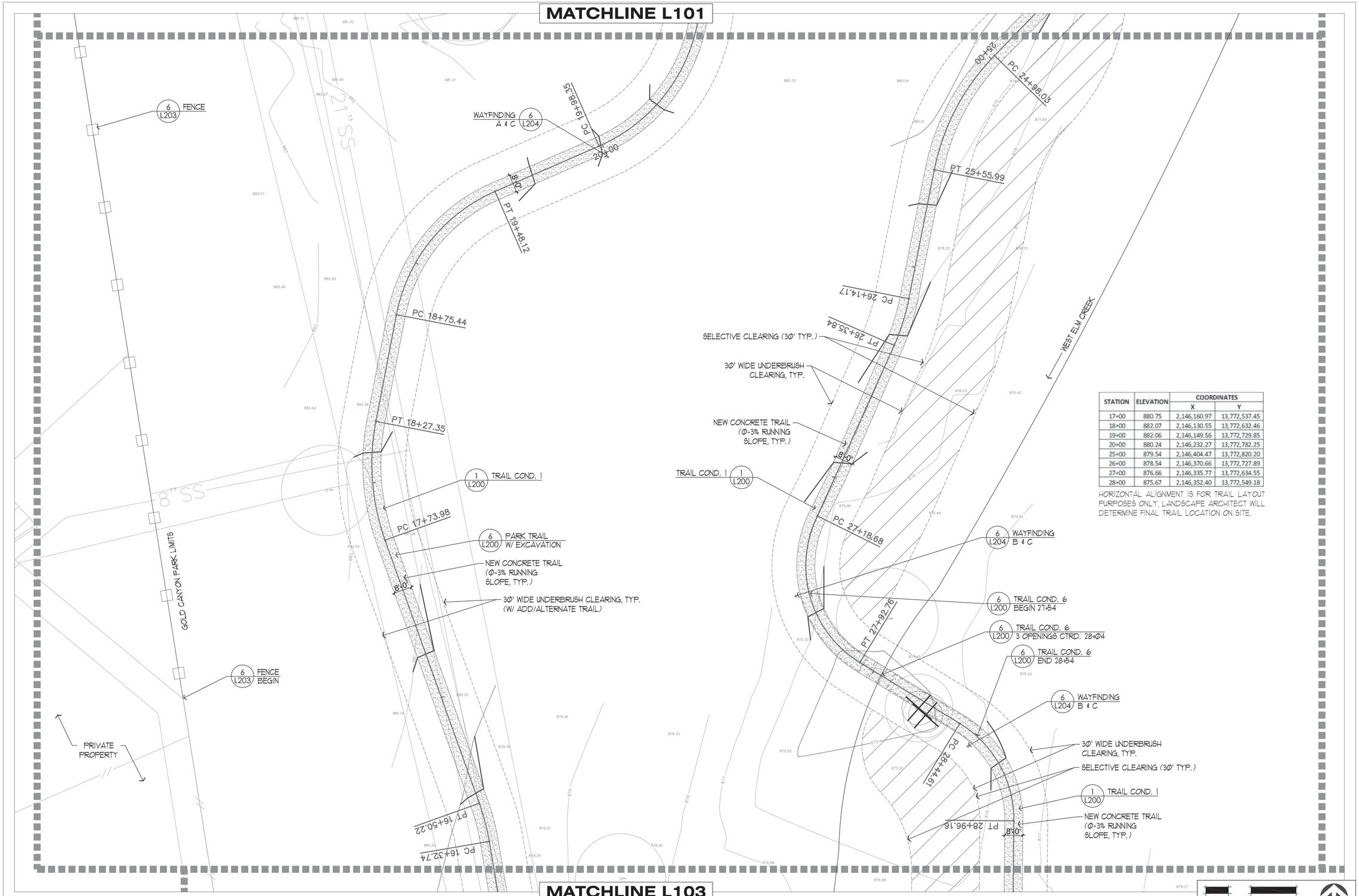

STATION	ELEVATION	COORDINATES	
		X	Y
17+00	880.75	2,146,160.97	13,772,537.45
18+00	882.07	2,146,130.55	13,772,632.46
19+00	882.06	2,146,149.56	13,772,729.85
20+00	880.24	2,146,232.27	13,772,782.25
25+00	879.54	2,146,404.47	13,772,820.20
26+00	878.54	2,146,370.66	13,772,727.89
27+00	876.66	2,146,335.77	13,772,634.55
28+00	875.67	2,146,352.40	13,772,549.18

HORIZONTAL ALIGNMENT IS FOR TRAIL LAYOUT PURPOSES ONLY, LANDSCAPE ARCHITECT WILL DETERMINE FINAL TRAIL LOCATION ON SITE.

REGISTERED LANDSCAPE ARCHITECT
JEFF W. PRUSKI
622
STATE OF TEXAS
11/7/2014

IDC
Planners · Engineers · Program Managers

RIALTO STUDIO
Rialto Studio, Inc.
Landscape Architecture
2425 Broadway, Suite 105
San Antonio, Texas 78215
P. 210.828.1166
F. 210.828.1346

Date:	Revisions/Submissions

CITY OF SAN ANTONIO
TRANSPORTATION & CAPITAL IMPROVEMENTS

CITY OF SAN ANTONIO
CAPITAL IMPROVEMENTS
MANAGEMENT SERVICES DIVISION
MUNICIPAL PLAZA BUILDING
114 W. Commerce P.O. BOX 839966
San Antonio, Texas 78283-3966
TEL. (210) 207-2879 FAX (210) 207-2197

GOLD CANYON PARK
San Antonio, Texas
Construction Plan Set

LANDSCAPE SITE PLAN
ENLARGEMENT

L102

Drawn By:	Designed By:
SFA	SFA

Date:
November 7, 2014
Project No. :
RSI-1306
Filename:

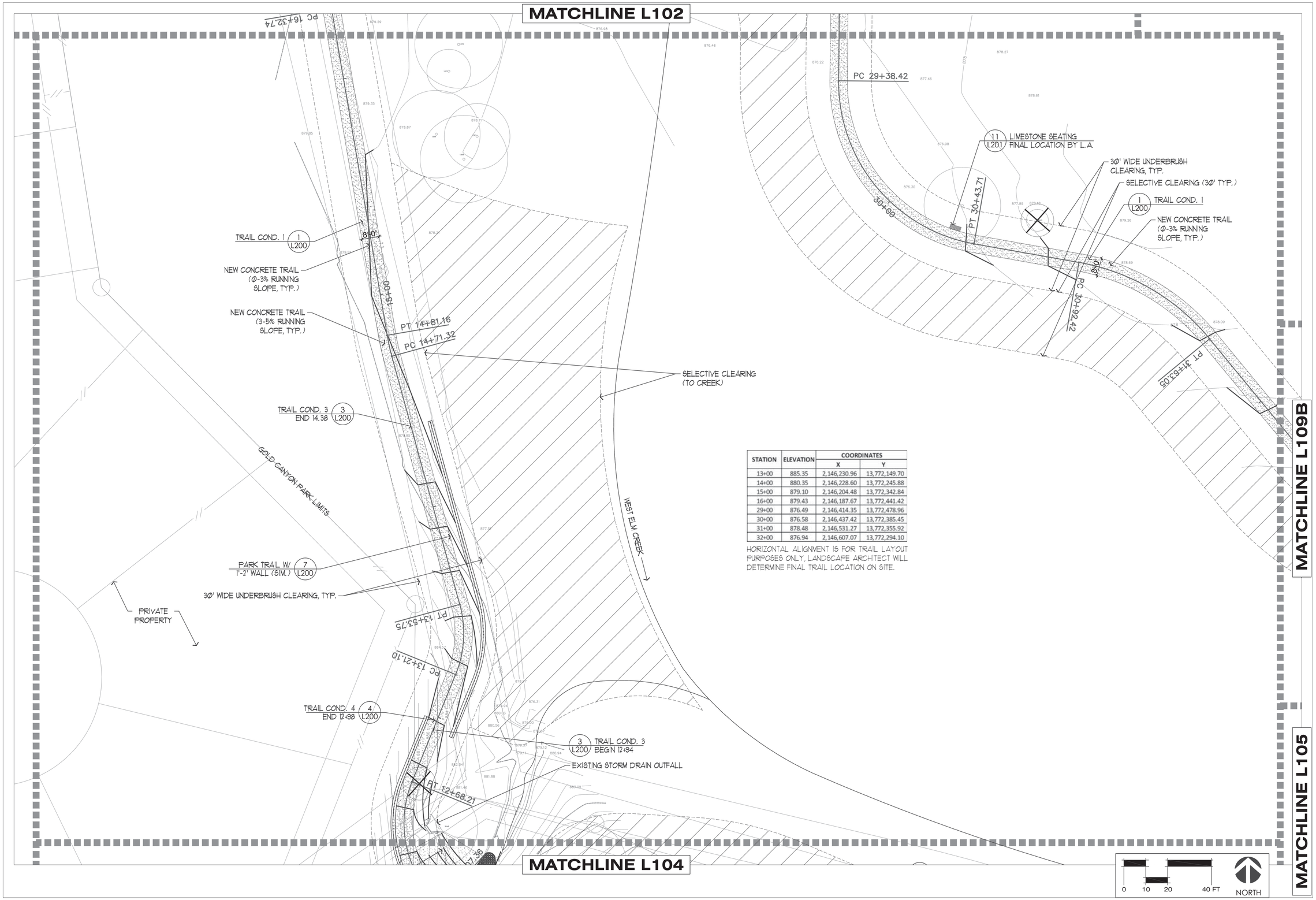

STATION	ELEVATION	COORDINATES	
		X	Y
13+00	885.35	2,146,230.96	13,772,149.70
14+00	880.35	2,146,228.60	13,772,245.88
15+00	879.10	2,146,204.48	13,772,342.84
16+00	879.43	2,146,187.67	13,772,441.42
29+00	876.49	2,146,414.35	13,772,478.96
30+00	876.58	2,146,437.42	13,772,385.45
31+00	878.48	2,146,531.27	13,772,355.92
32+00	876.94	2,146,607.07	13,772,294.10

HORIZONTAL ALIGNMENT IS FOR TRAIL LAYOUT PURPOSES ONLY, LANDSCAPE ARCHITECT WILL DETERMINE FINAL TRAIL LOCATION ON SITE.

REGISTERED LANDSCAPE ARCHITECT
JEFF W. SCHUTZ
622
STATE OF TEXAS
11/7/2014

IDC
Planners · Engineers · Program Managers

RIALTO STUDIO
Rialto Studio, Inc.
Landscape Architecture
2425 Broadway, Suite 105
San Antonio, Texas 78215
p 210.828.1166
f 210.828.1346

Date:	Revisions/Submissions

CITY OF SAN ANTONIO
TRANSPORTATION & CAPITAL IMPROVEMENTS

CITY OF SAN ANTONIO
CAPITAL IMPROVEMENTS
MANAGEMENT SERVICES DIVISION
MUNICIPAL PLAZA BUILDING
114 W. Commerce P.O. BOX 839966
San Antonio, Texas 78283-3966
TEL. (210) 207-2879 FAX (210) 207-2197

GOLD CANYON PARK
San Antonio, Texas
Construction Plan Set

LANDSCAPE SITE PLAN
ENLARGEMENT

L103

Drawn By:	Designed By:
SFA	SFA

Date:
November 7, 2014
Project No. :
RSI-1306
Filename:

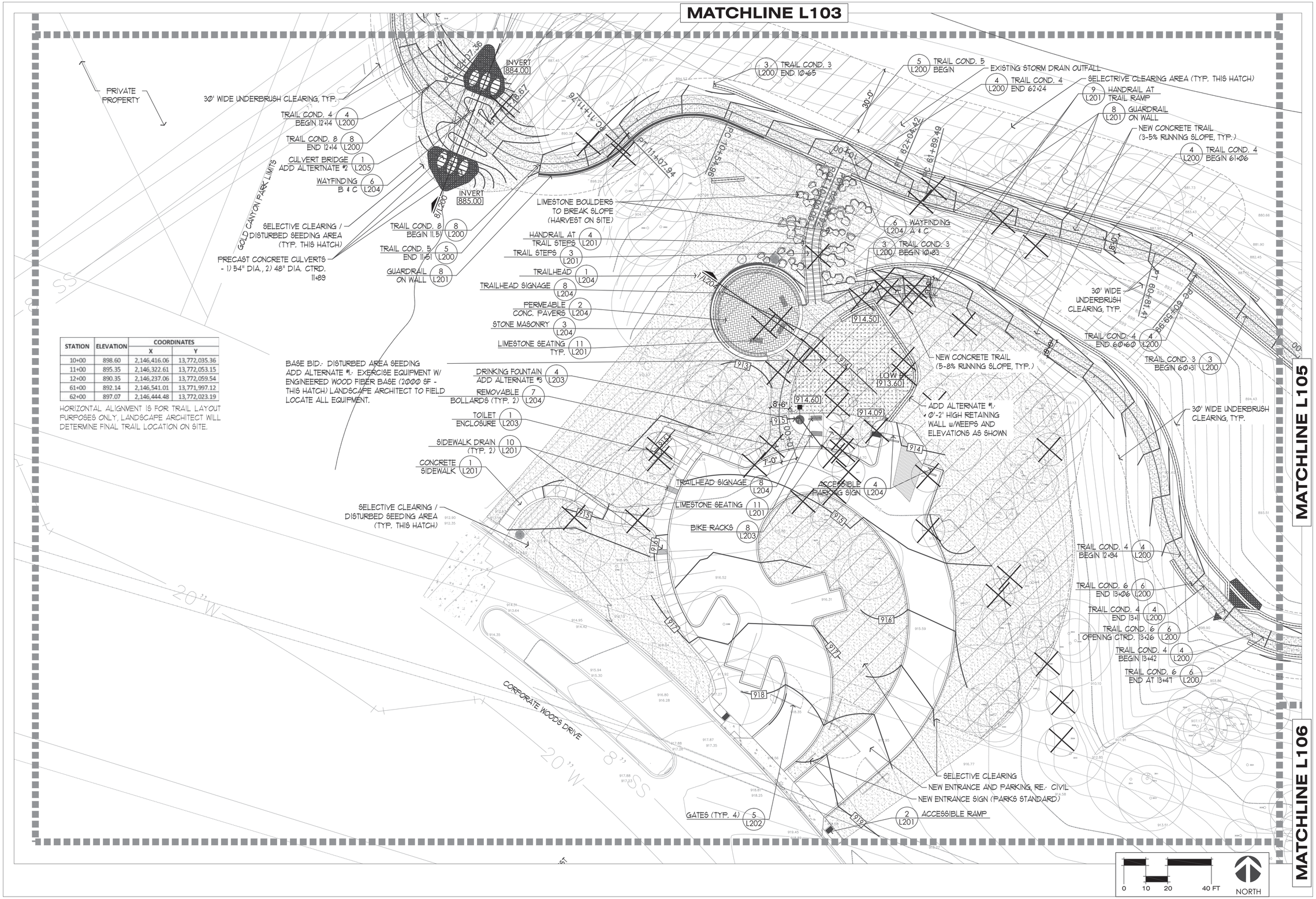

STATION	ELEVATION	COORDINATES	
		X	Y
10+00	898.60	2,146,416.06	13,772,035.36
11+00	895.35	2,146,322.61	13,772,053.15
12+00	890.35	2,146,237.06	13,772,059.54
61+00	892.14	2,146,541.01	13,771,997.12
62+00	897.07	2,146,444.48	13,772,023.19

HORIZONTAL ALIGNMENT IS FOR TRAIL LAYOUT PURPOSES ONLY, LANDSCAPE ARCHITECT WILL DETERMINE FINAL TRAIL LOCATION ON SITE.

REGISTERED LANDSCAPE ARCHITECT
JEFF W. RIALTO
622
STATE OF TEXAS
11/7/2014

IDC
Planners · Engineers · Program Managers

RIALTO STUDIO
Rialto Studio, Inc.
Landscape Architecture
2425 Broadway, Suite 105
San Antonio, Texas 78215
P 210.828.1166
F 210.828.1346

Date:	Revisions/Submissions

CITY OF SAN ANTONIO
TRANSPORTATION & CAPITAL IMPROVEMENTS

CITY OF SAN ANTONIO
CAPITAL IMPROVEMENTS
MANAGEMENT SERVICES DIVISION
MUNICIPAL PLAZA BUILDING
114 W. Commerce P.O. BOX 839966
San Antonio, Texas 78283-3966
TEL. (210) 207-2879 FAX (210) 207-2197

GOLD CANYON PARK
San Antonio, Texas
Construction Plan Set

LANDSCAPE SITE PLAN ENLARGEMENT

L104

Drawn By:	Designed By:
SFA	SFA

Date: November 7, 2014
Project No. : RSI-1306
Filename:

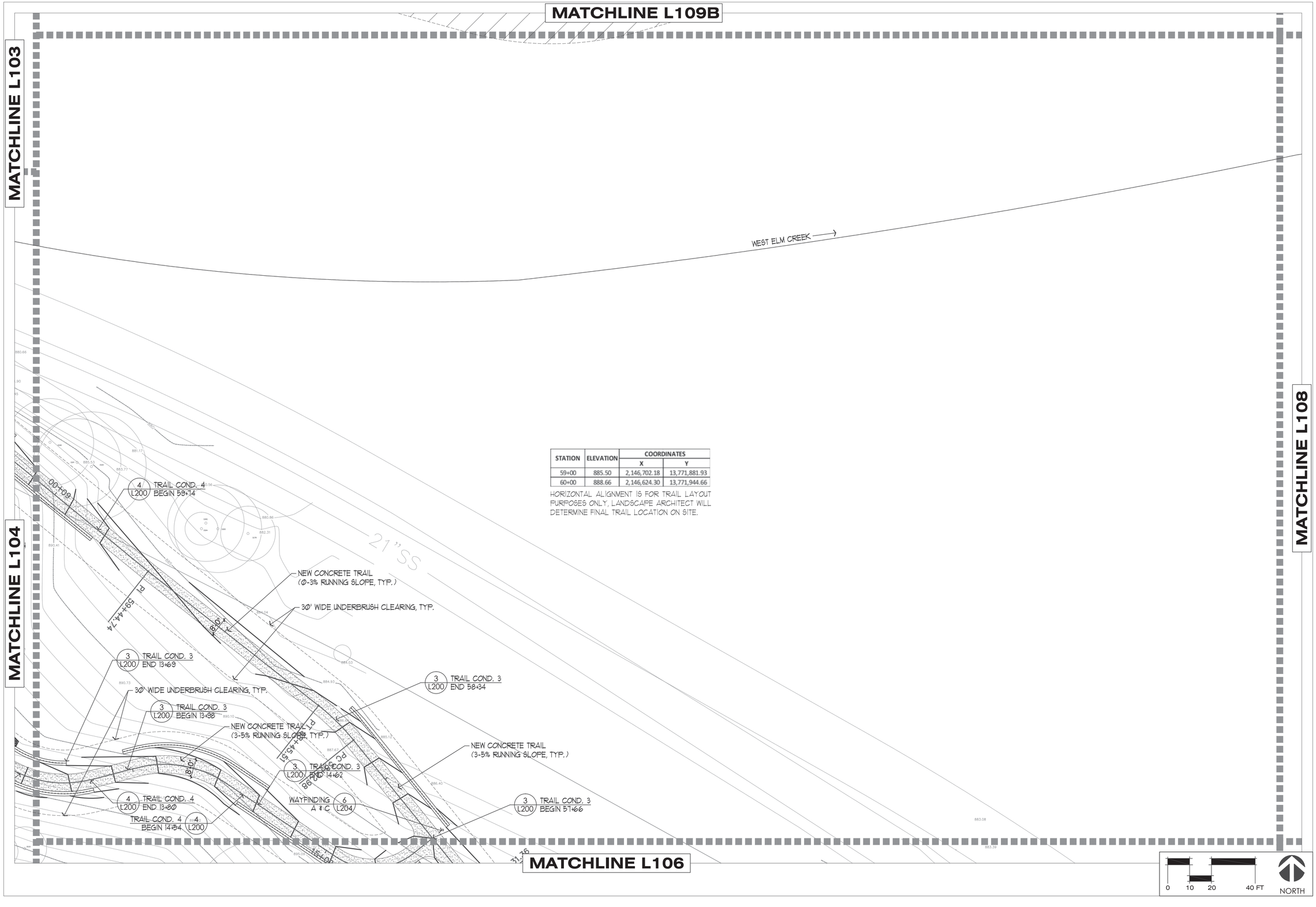

STATION	ELEVATION	COORDINATES	
		X	Y
59+00	885.50	2,146,702.18	13,771,881.93
60+00	888.66	2,146,624.30	13,771,944.66

HORIZONTAL ALIGNMENT IS FOR TRAIL LAYOUT PURPOSES ONLY, LANDSCAPE ARCHITECT WILL DETERMINE FINAL TRAIL LOCATION ON SITE.

REGISTERED LANDSCAPE ARCHITECT
JAMES W. RIALTO
622
STATE OF TEXAS
11/7/2014

IDC
Planners · Engineers · Program Managers

RIALTO STUDIO
Rialto Studio, Inc.
Landscape Architecture
2425 Broadway, Suite 105
San Antonio, Texas 78215
P 210.828.1166
F 210.828.1346

Date:	Revisions/Submissions

CITY OF SAN ANTONIO
TRANSPORTATION & CAPITAL IMPROVEMENTS

CITY OF SAN ANTONIO
CAPITAL IMPROVEMENTS
MANAGEMENT SERVICES DIVISION
MUNICIPAL PLAZA BUILDING
114 W. Commerce P.O. BOX 839966
San Antonio, Texas 78283-3966
TEL. (210) 207-2879 FAX (210) 207-2197

GOLD CANYON PARK
San Antonio, Texas
Construction Plan Set

LANDSCAPE SITE PLAN
ENLARGEMENT

L105

Drawn By:	Designed By:
SFA	SFA

Date:
November 7, 2014

Project No. :
RSI-1306

Filename:

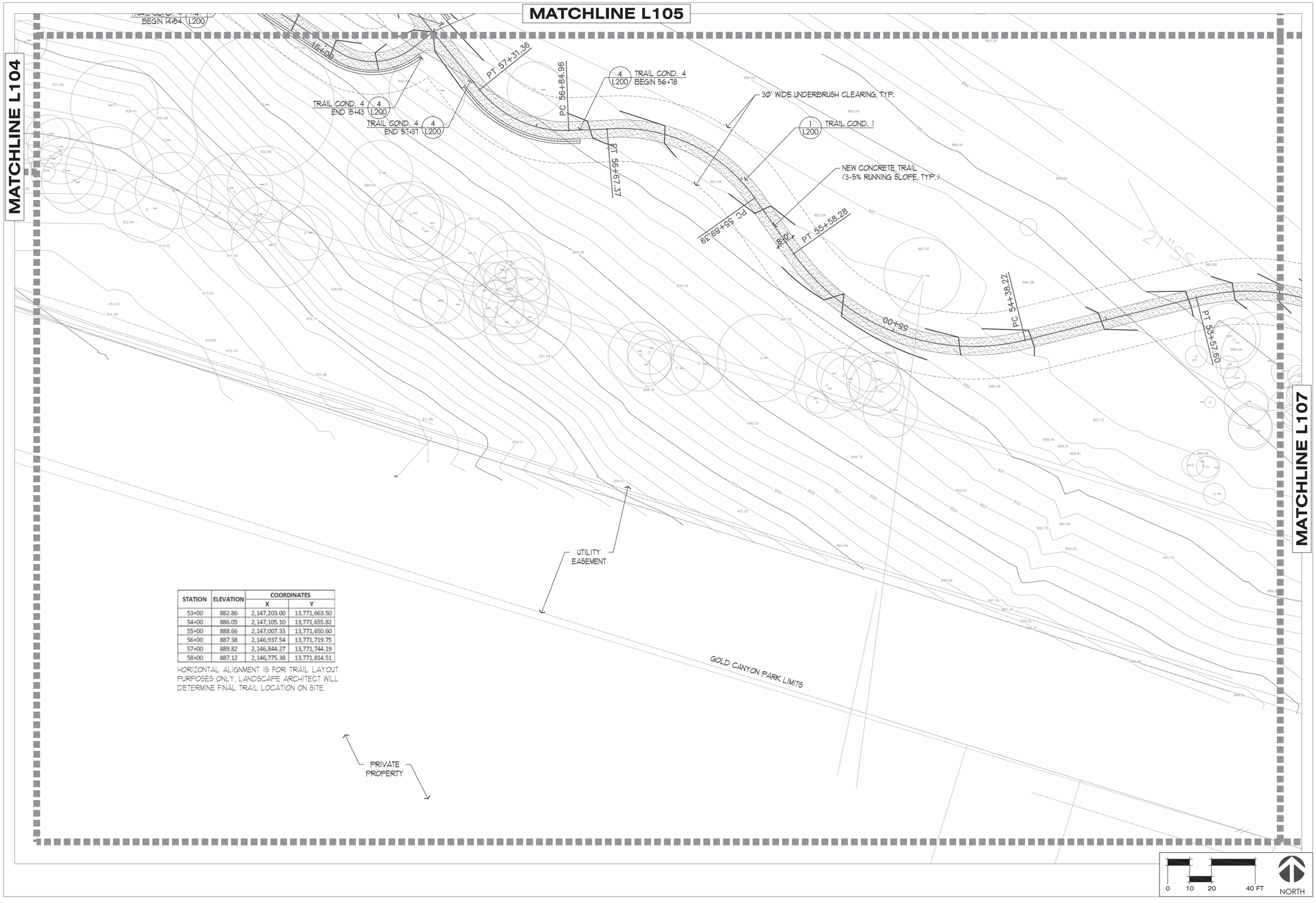

STATION	ELEVATION	COORDINATES	
		X	Y
53+00	882.86	2,147,203.00	13,771,663.50
54+00	886.05	2,147,105.10	13,771,655.82
55+00	888.66	2,147,007.33	13,771,650.60
56+00	887.38	2,146,937.54	13,771,719.75
57+00	889.82	2,146,844.27	13,771,744.19
58+00	887.12	2,146,775.38	13,771,814.51

HORIZONTAL ALIGNMENT IS FOR TRAIL LAYOUT PURPOSES ONLY, LANDSCAPE ARCHITECT WILL DETERMINE FINAL TRAIL LOCATION ON SITE.

REGISTERED LANDSCAPE ARCHITECT
JAMES W. RIALTO
622
STATE OF TEXAS
11/7/2014

IDC
Planners · Engineers · Program Managers

RIALTO STUDIO
Rialto Studio, Inc.
Landscape Architecture
2425 Broadway, Suite 105
San Antonio, Texas 78215
P 210.828.1166
F 210.828.1346

Date:	Revisions/Submissions

CITY OF SAN ANTONIO
TRANSPORTATION & CAPITAL IMPROVEMENTS

CITY OF SAN ANTONIO
CAPITAL IMPROVEMENTS
MANAGEMENT SERVICES DIVISION
MUNICIPAL PLAZA BUILDING
114 W. Commerce P.O. BOX 839966
San Antonio, Texas 78283-3966
TEL. (210) 207-2879 FAX (210) 207-2197

GOLD CANYON PARK
San Antonio, Texas
Construction Plan Set

LANDSCAPE SITE PLAN
ENLARGEMENT

L106

Drawn By:	Designed By:
SFA	SFA

Date:
November 7, 2014

Project No. :
RSI-1306

Filename:

MATCHLINE L108

MATCHLINE L106

STATION	ELEVATION	COORDINATES	
		X	Y
47+00	862.36	2,147,671.11	13,771,730.41
48+00	862.47	2,147,650.90	13,771,635.41
49+00	866.72	2,147,580.70	13,771,566.80
50+00	871.22	2,147,483.11	13,771,556.28
51+00	876.22	2,147,389.41	13,771,591.05
52+00	880.91	2,147,296.22	13,771,627.30

HORIZONTAL ALIGNMENT IS FOR TRAIL LAYOUT PURPOSES ONLY, LANDSCAPE ARCHITECT WILL DETERMINE FINAL TRAIL LOCATION ON SITE.

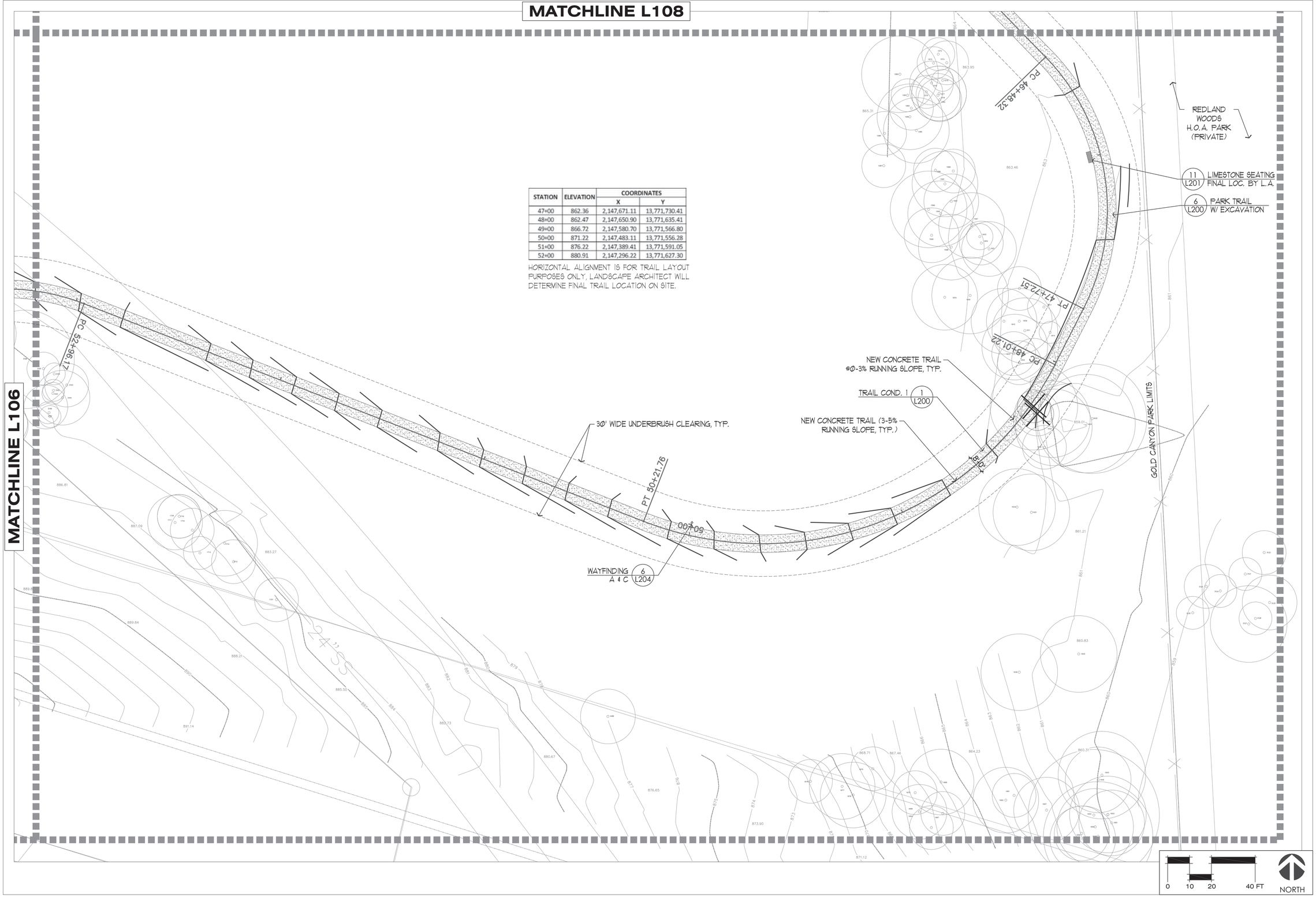

REGISTERED LANDSCAPE ARCHITECT
STATE OF TEXAS
622
11/7/2014

IDC
Planners · Engineers · Program Managers

RIALTO STUDIO
Rialto Studio, Inc.
Landscape Architecture
2425 Broadway, Suite 105
San Antonio, Texas 78215
p 210.828.1166
f 210.828.1346

Date:	Revisions/Submissions

CITY OF SAN ANTONIO
TRANSPORTATION & CAPITAL IMPROVEMENTS

CITY OF SAN ANTONIO
CAPITAL IMPROVEMENTS
MANAGEMENT SERVICES DIVISION
MUNICIPAL PLAZA BUILDING
114 W. Commerce P.O. BOX 839966
San Antonio, Texas 78283-3966
TEL. (210) 207-2879 FAX (210) 207-2197

GOLD CANYON PARK
San Antonio, Texas
Construction Plan Set
LANDSCAPE SITE PLAN
ENLARGEMENT

L107

Drawn By:	Designed By:
SFA	SFA

Date:
November 7, 2014
Project No. :
RSI-1306
Filename:

MATCHLINE L109A

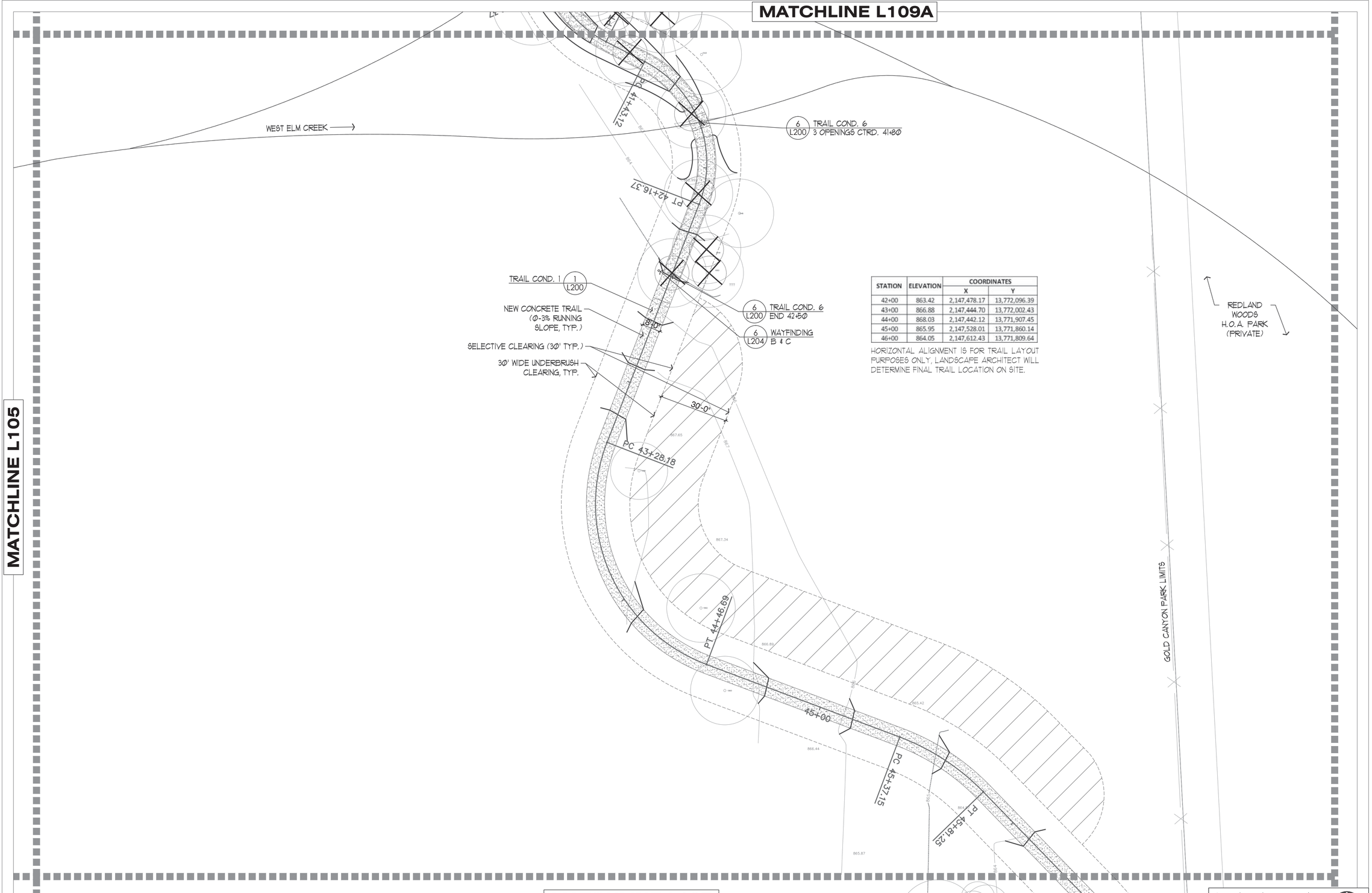

STATION	ELEVATION	COORDINATES	
		X	Y
42+00	863.42	2,147,478.17	13,772,096.39
43+00	866.88	2,147,444.70	13,772,002.43
44+00	868.03	2,147,442.12	13,771,907.45
45+00	865.95	2,147,528.01	13,771,860.14
46+00	864.05	2,147,612.43	13,771,809.64

HORIZONTAL ALIGNMENT IS FOR TRAIL LAYOUT PURPOSES ONLY, LANDSCAPE ARCHITECT WILL DETERMINE FINAL TRAIL LOCATION ON SITE.

MATCHLINE L105

MATCHLINE L107

0 10 20 40 FT

NORTH

REGISTERED LANDSCAPE ARCHITECT
JAMES W. RIALTO
622
STATE OF TEXAS
11/7/2014

IDC
Planners · Engineers · Program Managers

RIALTO STUDIO
Rialto Studio, Inc.
Landscape Architecture
2425 Broadway, Suite 105
San Antonio, Texas 78215
P. 210.828.1166
F. 210.828.1346

Date:	Revisions/Submissions

CITY OF SAN ANTONIO
TRANSPORTATION & CAPITAL IMPROVEMENTS

CITY OF SAN ANTONIO
CAPITAL IMPROVEMENTS
MANAGEMENT SERVICES DIVISION
MUNICIPAL PLAZA BUILDING
114 W. Commerce P.O. BOX 839966
San Antonio, Texas 78283-3966
TEL. (210) 207-2879 FAX (210) 207-2197

GOLD CANYON PARK
San Antonio, Texas
Construction Plan Set

LANDSCAPE SITE PLAN
ENLARGEMENT

L108

Drawn By:	Designed By:
SFA	SFA

Date:
November 7, 2014

Project No. :
RSI-1306

Filename:

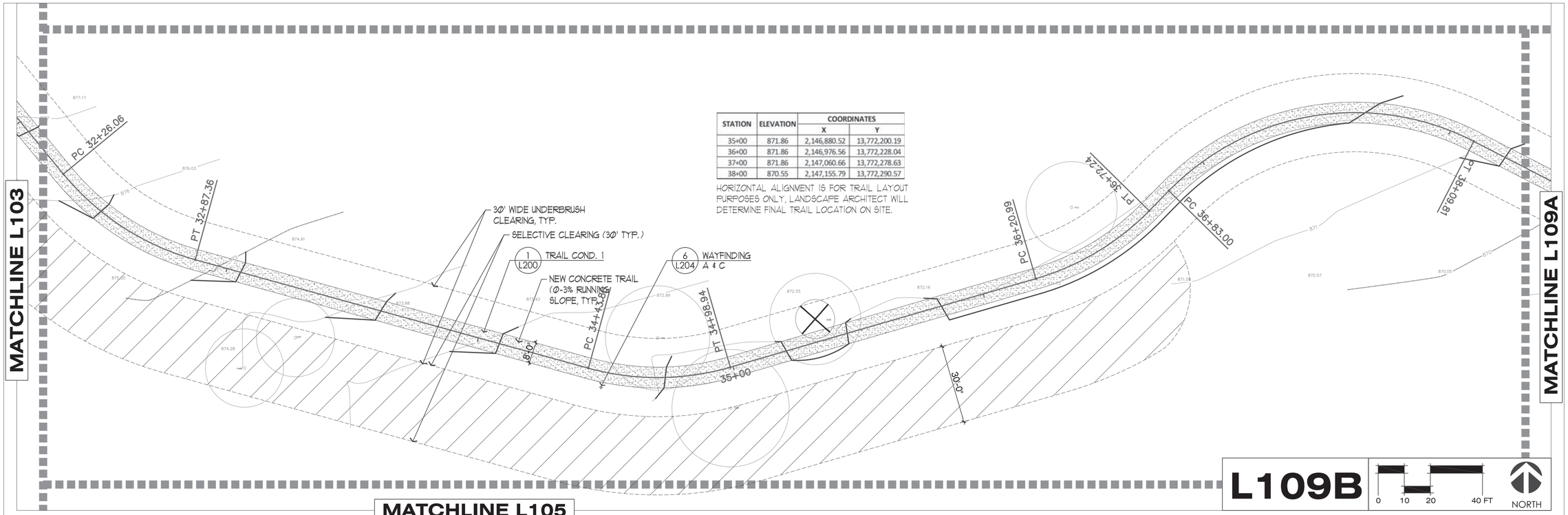

STATION	ELEVATION	COORDINATES	
		X	Y
35+00	871.86	2,146,880.52	13,772,200.19
36+00	871.86	2,146,976.56	13,772,228.04
37+00	871.86	2,147,060.66	13,772,278.63
38+00	870.55	2,147,155.79	13,772,290.57

HORIZONTAL ALIGNMENT IS FOR TRAIL LAYOUT PURPOSES ONLY, LANDSCAPE ARCHITECT WILL DETERMINE FINAL TRAIL LOCATION ON SITE.

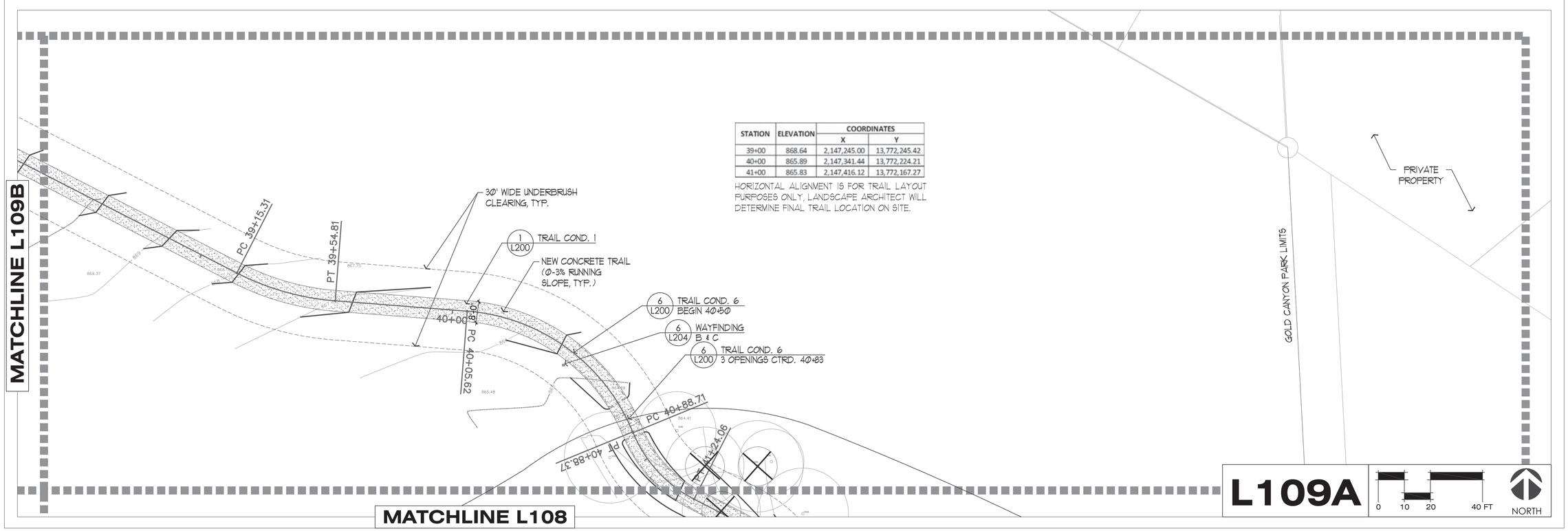

STATION	ELEVATION	COORDINATES	
		X	Y
39+00	868.64	2,147,245.00	13,772,245.42
40+00	865.89	2,147,341.44	13,772,224.21
41+00	865.83	2,147,416.12	13,772,167.27

HORIZONTAL ALIGNMENT IS FOR TRAIL LAYOUT PURPOSES ONLY, LANDSCAPE ARCHITECT WILL DETERMINE FINAL TRAIL LOCATION ON SITE.

REGISTERED LANDSCAPE ARCHITECT
JAMES W. RIALTO
622
STATE OF TEXAS
11/7/2014

IDC
Planners · Engineers · Program Managers

RIALTO STUDIO
Rialto Studio, Inc.
Landscape Architecture
2425 Broadway, Suite 105
San Antonio, Texas 78215
P 210.828.1166
F 210.828.1346

Date:	Revisions/Submissions

CITY OF SAN ANTONIO
TRANSPORTATION & CAPITAL IMPROVEMENTS

CITY OF SAN ANTONIO
CAPITAL IMPROVEMENTS
MANAGEMENT SERVICES DIVISION
MUNICIPAL PLAZA BUILDING
114 W. Commerce P.O. BOX 839966
San Antonio, Texas 78283-3966
TEL. (210) 207-2879 FAX (210) 207-2197

GOLD CANYON PARK
San Antonio, Texas
Construction Plan Set

LANDSCAPE SITE PLAN
ENLARGEMENT

L109

Drawn By:	Designed By:
SFA	SFA

Date:
November 7, 2014

Project No. :
RSI-1306

Filename:

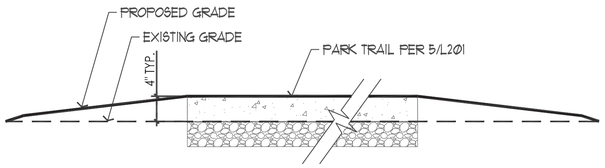

1 SECTION: TRAIL CONDITION 1
SCALE: 1"= 1'-0"

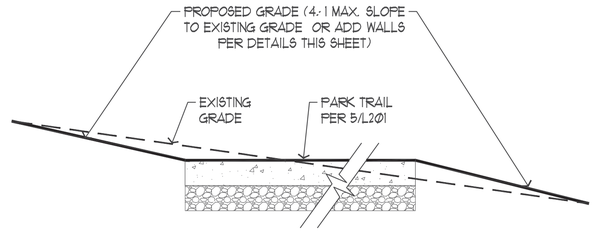

2 SECTION: TRAIL CONDITION 2
SCALE: 1"= 1'-0"

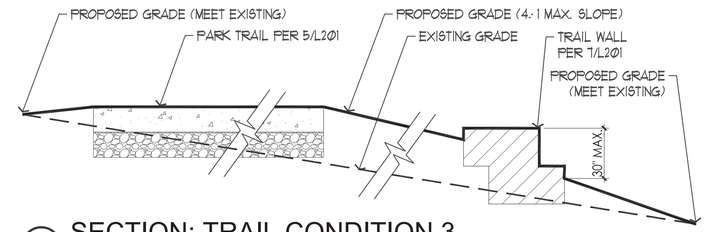

3 SECTION: TRAIL CONDITION 3
SCALE: 1"= 1'-0"

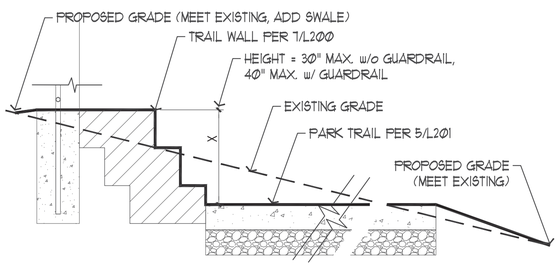

4 SECTION: TRAIL CONDITION 4
SCALE: 1"= 1'-0"

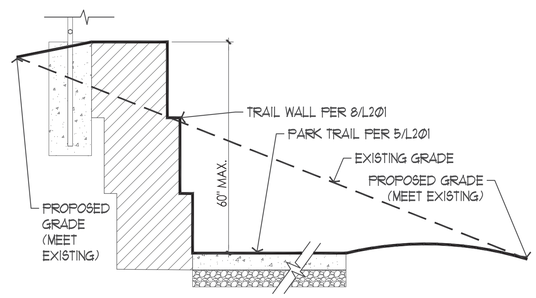

5 SECTION: TRAIL CONDITION 5
SCALE: 1/2" = 1'-0"

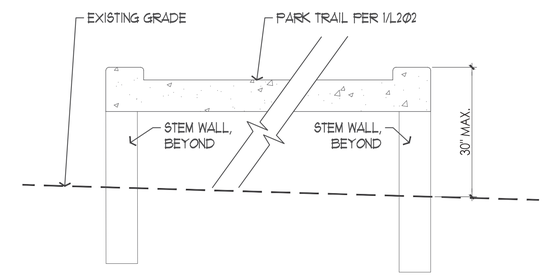

6 SECTION: TRAIL CONDITION 6
SCALE: 1"= 1'-0"

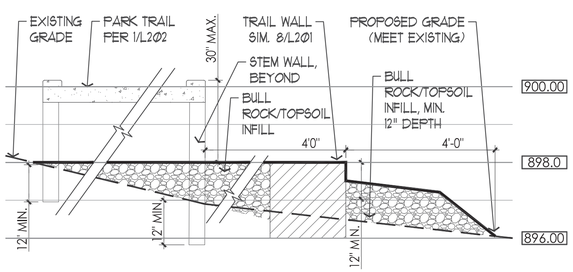

7 SECTION: TRAIL CONDITION 7
SCALE: 1/2" = 1'-0"

NOTE: FOR ALL WALLS REFER TO CIVIL DIRECTION FOR GLOBAL STABILITY DIRECTION.

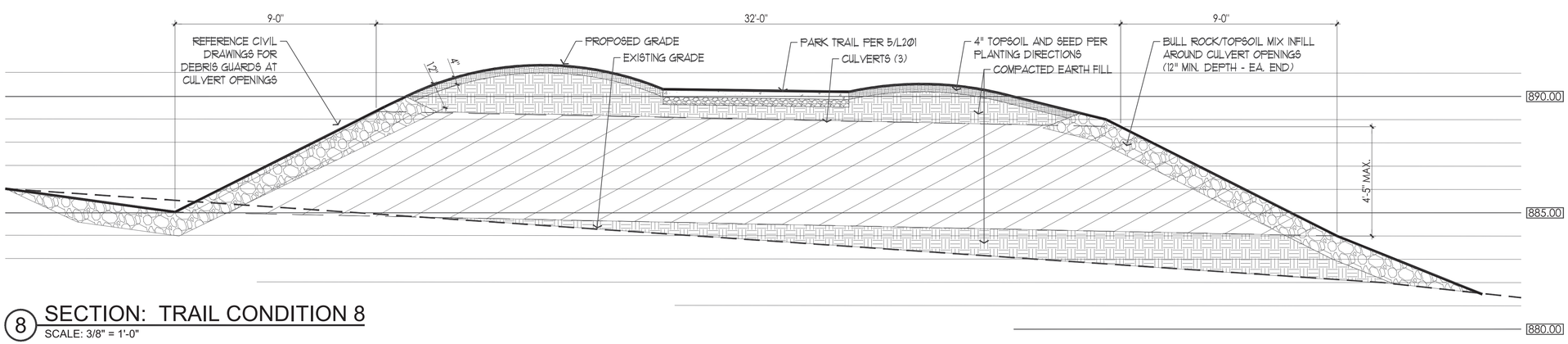

8 SECTION: TRAIL CONDITION 8
SCALE: 3/8" = 1'-0"

REGISTERED LANDSCAPE ARCHITECT
CHARLES A. FLEMING
622
STATE OF TEXAS
11/7/2014

IDC
Planners · Engineers · Program Managers

RIALTO STUDIO
Rialto Studio, Inc.
Landscape Architecture
2405 Broadway, Suite 105
San Antonio, Texas 78215
P: 210.828.1155
F: 210.828.1399

Date:	Revisions/Submissions

CITY OF SAN ANTONIO
TRANSPORTATION & CAPITAL IMPROVEMENTS

CITY OF SAN ANTONIO
CAPITAL IMPROVEMENTS
MANAGEMENT SERVICES DIVISION
MUNICIPAL PLAZA BUILDING
114 W. Commerce P.O. BOX 839966
San Antonio, Texas 78283-3966
TEL. (210) 207-2879 FAX (210) 207-2197

GOLD CANYON PARK
San Antonio, Texas
Construction Plan Set
LANDSCAPE
TRAIL CONDITIONS

L200

Drawn By:	Designed By:
SFA	SFA

Date:
November 7, 2014
Project No. :
RSI-1306
Filename:

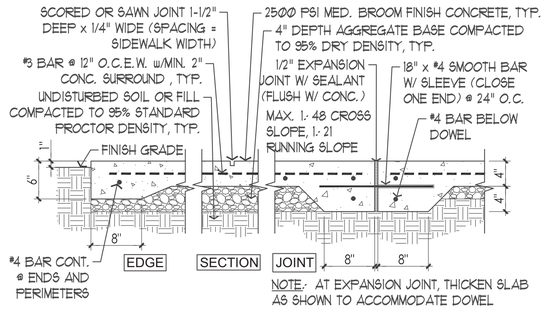

1 DETAIL: 4" CONCRETE SIDEWALK
SCALE: 1"= 1'-0"

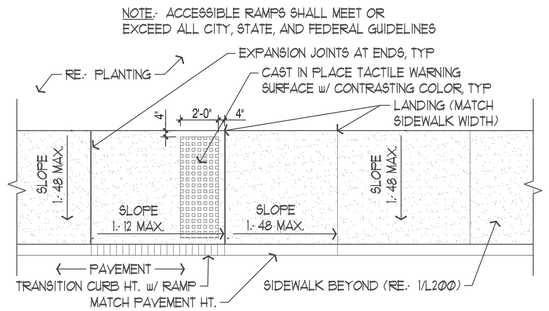

2 PLAN: ACCESSIBLE RAMP
SCALE: 1/4"= 1'-0"

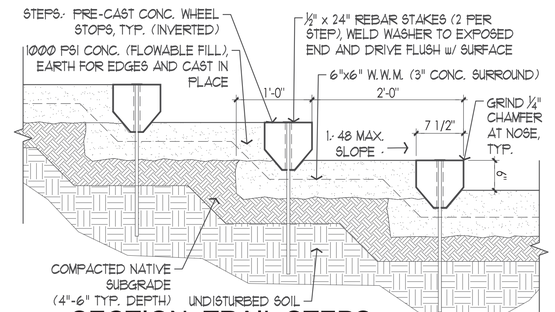

3 SECTION: TRAIL STEPS
SCALE: 1" = 1'-0"

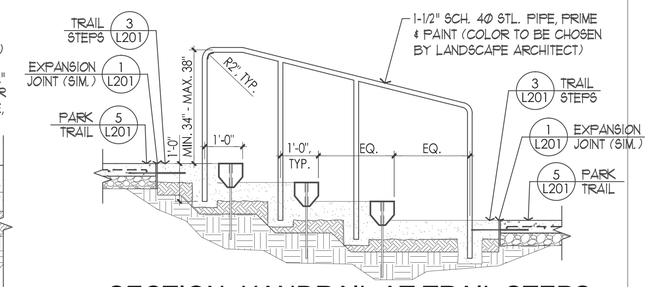

4 SECTION: HANDRAIL AT TRAIL STEPS
SCALE: 1/2" = 1'-0"

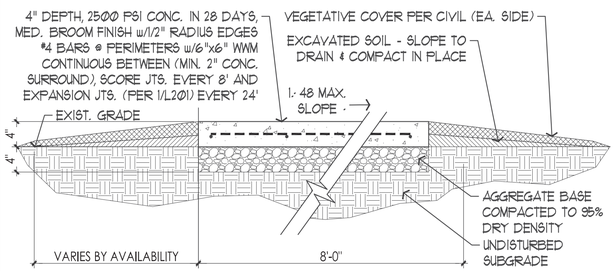

5 SECTION: PARK TRAIL
SCALE: 1"= 1'-0"

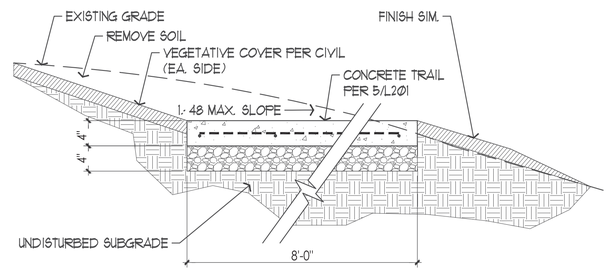

6 SECTION: PARK TRAIL W/ EXCAVATION
SCALE: 1"= 1'-0"

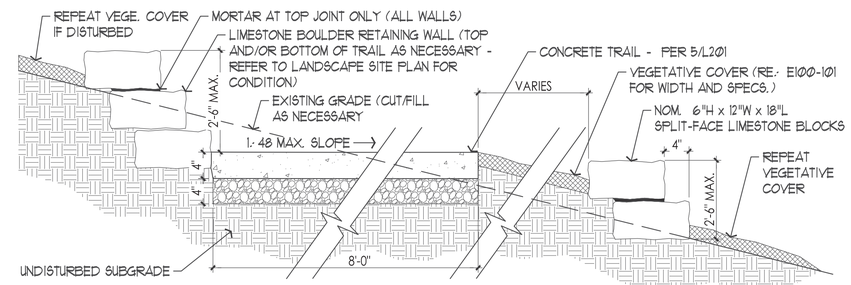

7 SECTION: PARK TRAIL W/ 1'-2.5' WALL
SCALE: 1"= 1'-0"

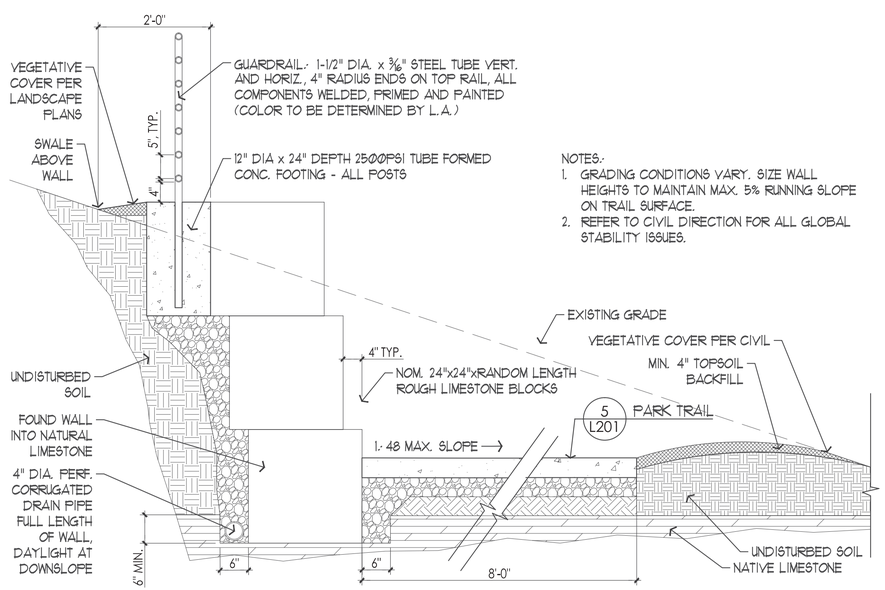

8 SECTION: PARK TRAIL W/ 3'-5' WALL
SCALE: 3/4"= 1'-0"

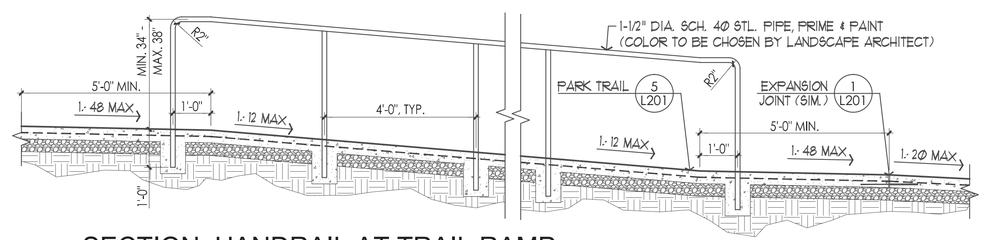

9 SECTION: HANDRAIL AT TRAIL RAMP
SCALE: 1/2" = 1'-0"

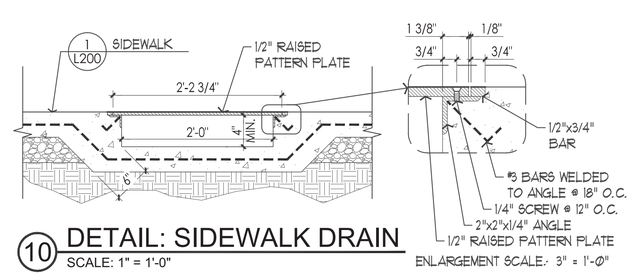

10 DETAIL: SIDEWALK DRAIN
SCALE: 1" = 1'-0"

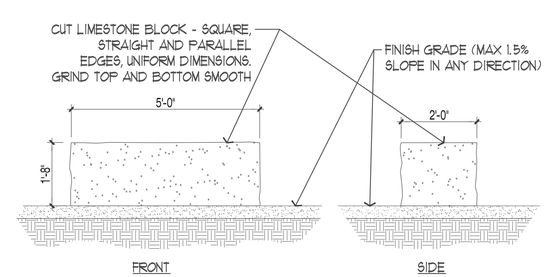

11 DETAIL: LIMESTONE BLOCK SEATING
SCALE: 1/2" = 1'-0"

REGISTERED LANDSCAPE ARCHITECT
SARAH FAYE ARMSTRONG
622
STATE OF TEXAS
11/7/2014

IDC
Planners · Engineers · Program Managers

RIALTO STUDIO
Rialto Studio, Inc.
Landscape Architecture
2435 Broadway, Suite 105
San Antonio, Texas 78215
p: 210.828.1155
f: 210.828.1399

Date:	Revisions/Submissions

CITY OF SAN ANTONIO
TRANSPORTATION & CAPITAL IMPROVEMENTS

CITY OF SAN ANTONIO
CAPITAL IMPROVEMENTS
MANAGEMENT SERVICES DIVISION
MUNICIPAL PLAZA BUILDING
114 W. Commerce P.O. BOX 839966
San Antonio, Texas 78283-3966
TEL. (210) 207-2879 FAX (210) 207-2197

GOLD CANYON PARK
San Antonio, Texas
Construction Plan Set
LANDSCAPE
CONSTRUCTION DETAILS

L201

Drawn By:	Designed By:
SFA	SFA

Date: November 7, 2014
Project No. : RSI-1306
Filename:

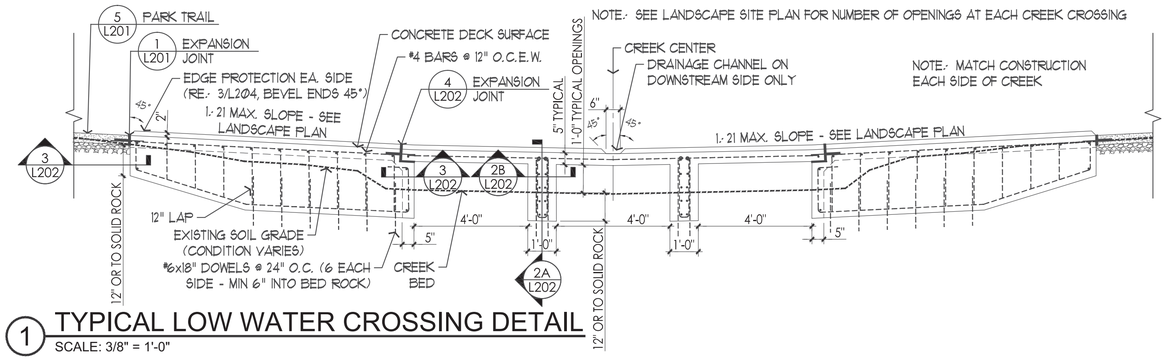

1 TYPICAL LOW WATER CROSSING DETAIL
SCALE: 3/8" = 1'-0"

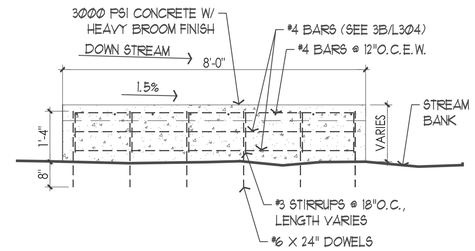

2A SECTION: PYLON
SCALE: 1/2" = 1'-0"

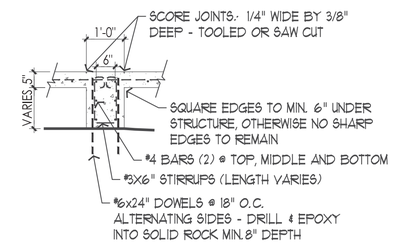

2B SECTION: PYLON
SCALE: 1/2" = 1'-0"

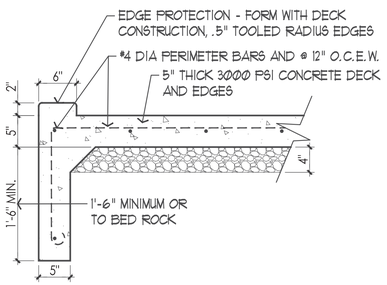

3 SECTION: CONCRETE STEM WALL
SCALE: 1" = 1'-0"

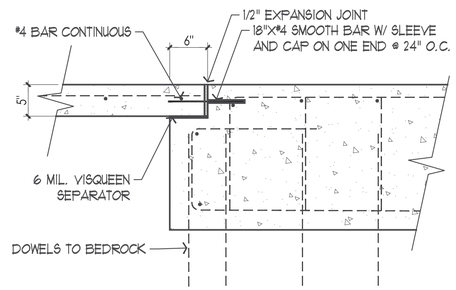

4 SECTION: EXPANSION JOINT
SCALE: 1" = 1'-0"

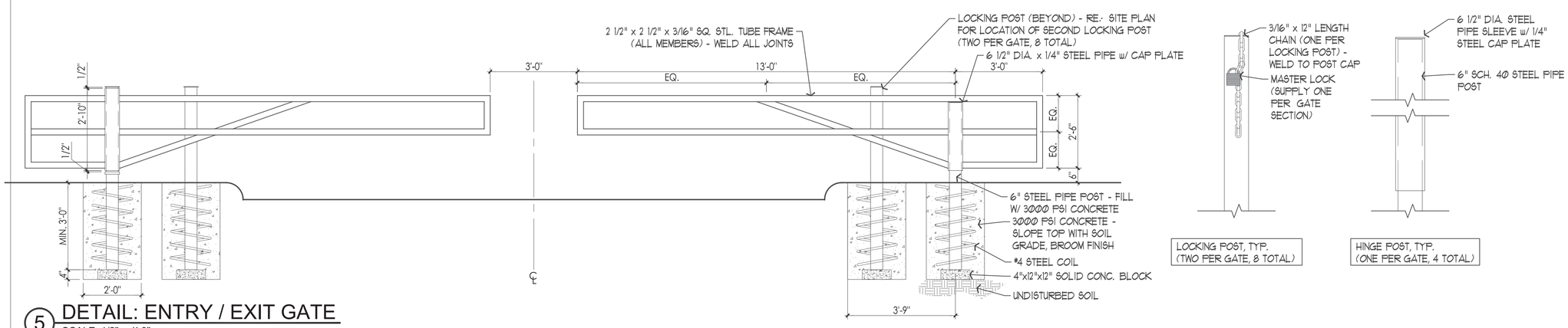

5 DETAIL: ENTRY / EXIT GATE
SCALE: 1/2" = 1'-0"

REGISTERED LANDSCAPE ARCHITECT
STATE OF TEXAS
622
11/7/2014

IDC
Planners · Engineers · Program Managers

RIALTO STUDIO
Rialto Studio, Inc.
Landscape Architecture
2405 Broadway, Suite 105
San Antonio, Texas 78215
p: 210.828.1155
f: 210.828.1399

Date:	Revisions/Submissions

CITY OF SAN ANTONIO
TRANSPORTATION & CAPITAL IMPROVEMENTS

CITY OF SAN ANTONIO
CAPITAL IMPROVEMENTS
MANAGEMENT SERVICES DIVISION
MUNICIPAL PLAZA BUILDING
114 W. Commerce P.O. BOX 839966
San Antonio, Texas 78283-3966
TEL. (210) 207-2879 FAX (210) 207-2197

GOLD CANYON PARK
San Antonio, Texas
Construction Plan Set
LANDSCAPE
CONSTRUCTION DETAILS

L202

Drawn By:	Designed By:
SFA	SFA

Date: November 7, 2014
Project No.: RSI-1306
Filename:

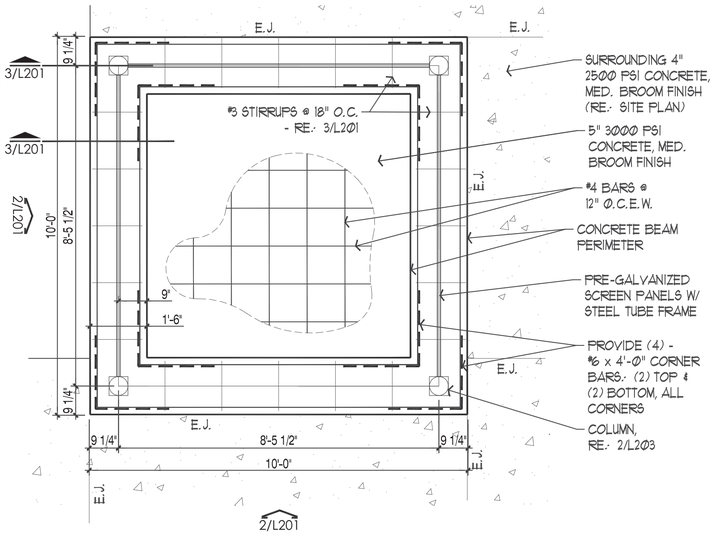

1 PLAN: TOILET ENCLOSURE ON CONCRETE
SCALE: 1/2" = 1'-0"

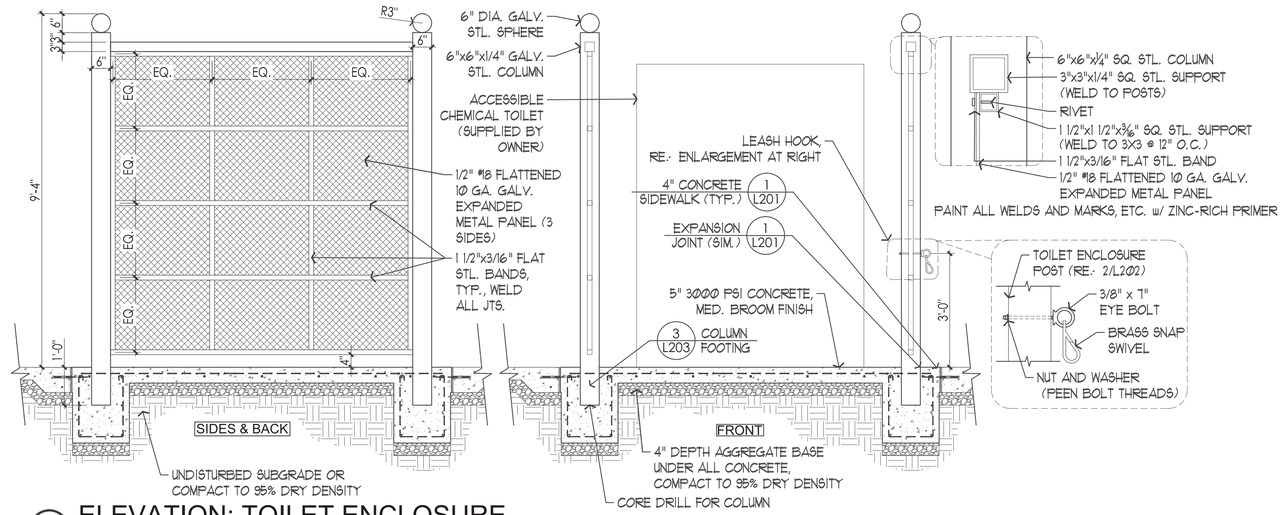

2 ELEVATION: TOILET ENCLOSURE
SCALE: 1/2" = 1'-0"

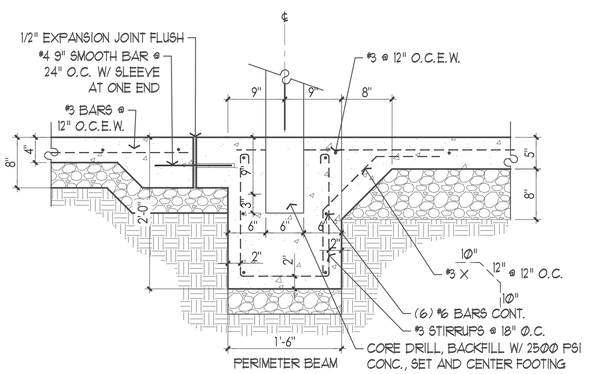

3 DETAIL: TOILET ENC. COLUMN FOOTING
SCALE: 1" = 1'-0"

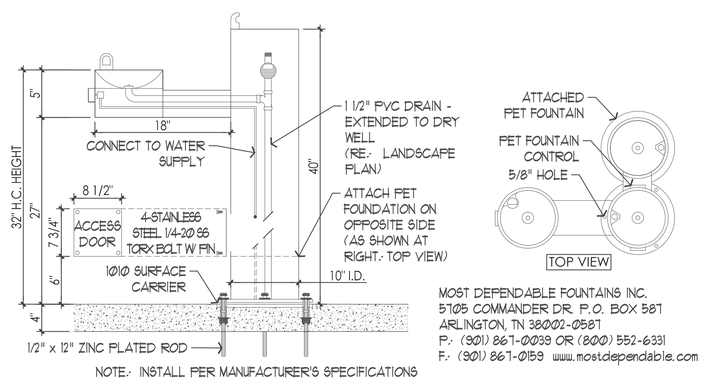

4 DETAIL: DRINKING FOUNTAIN (ADD ALTERNATE #3)
N.T.S.

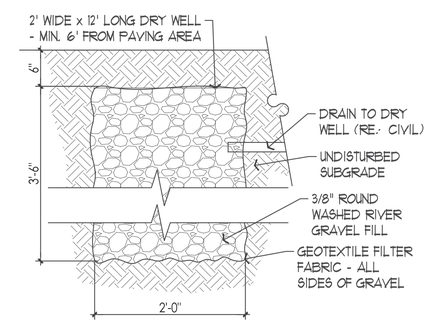

5 SECTION: DRY WELL
N.T.S.

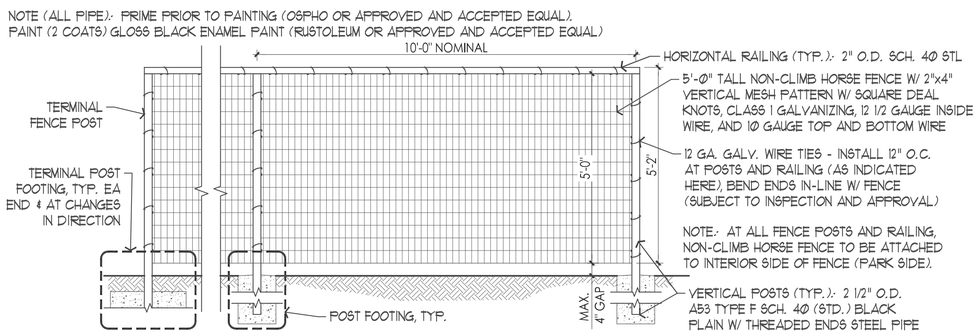

6 DETAIL: FENCE
SCALE: 1/2" = 1'-0"

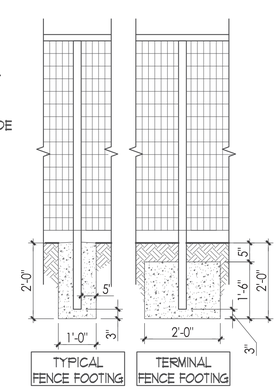

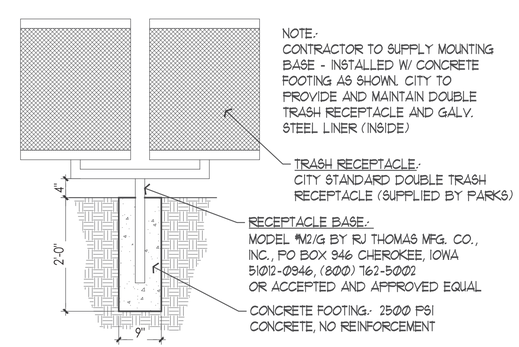

7 DETAIL: TRASH RECEPTACLE
SCALE: 3/4" = 1'-0"

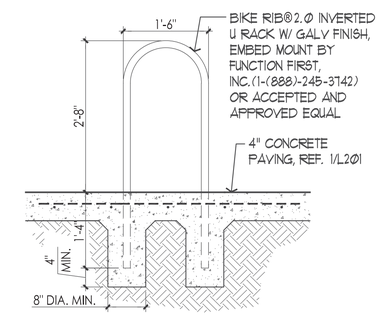

8 DETAIL: BIKE RACK
SCALE: 3/4" = 1'-0"

REGISTERED LANDSCAPE ARCHITECT
MARK ALAN BRAUN
622
STATE OF TEXAS
11/7/2014

IDC Planners · Engineers · Program Managers

RIALTO STUDIO
Rialto Studio, Inc.
Landscape Architecture
2405 Broadway, Suite 105
San Antonio, Texas 78215
p: 210.828.1155
f: 210.828.1399

Date:	Revisions/Submissions

CITY OF SAN ANTONIO TRANSPORTATION & CAPITAL IMPROVEMENTS

CITY OF SAN ANTONIO
CAPITAL IMPROVEMENTS
MANAGEMENT SERVICES DIVISION
MUNICIPAL PLAZA BUILDING
114 W. Commerce P.O. BOX 839966
San Antonio, Texas 78283-3966
TEL. (210) 207-2879 FAX (210) 207-2197

GOLD CANYON PARK
San Antonio, Texas
Construction Plan Set

LANDSCAPE
CONSTRUCTION DETAILS

L203

Drawn By:	Designed By:
SFA	SFA

Date: November 7, 2014
Project No.: RSI-1306
Filename:

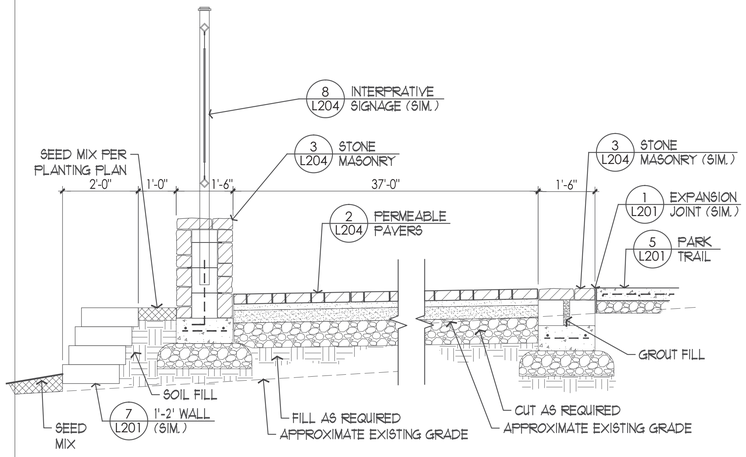

1 SECTION: TRAILHEAD
SCALE: 1/2" = 1'-0"

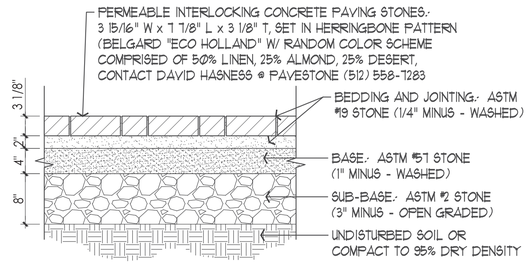

2 DETAIL: PERMEABLE CONC. PAVERS
SCALE: 1"= 1'-0"

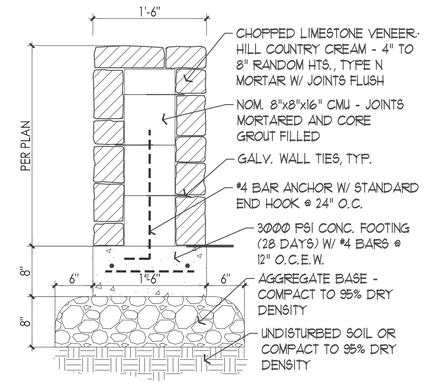

3 DETAIL: STONE MASONRY
SCALE: 1"= 1'-0"

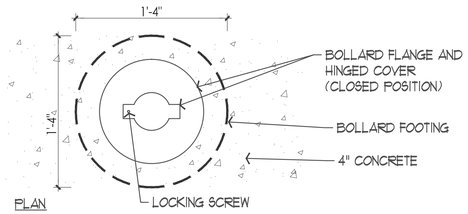

PLAN

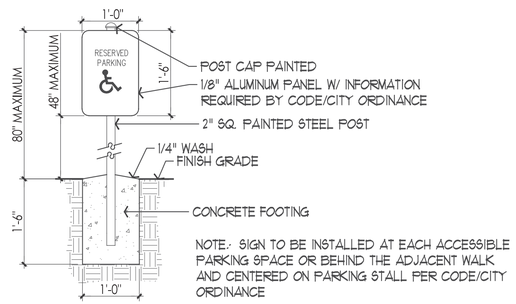

4 ELEV.: ACCESSIBLE PARKING SIGN
SCALE: 3/4" = 1'-0"

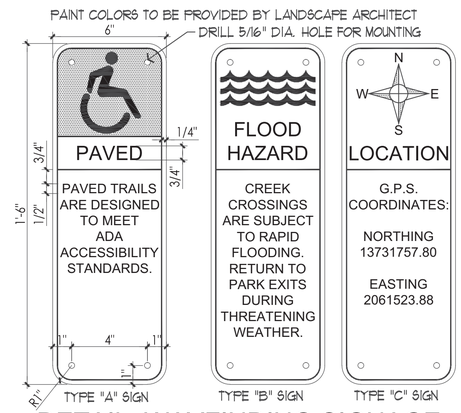

5 DETAIL: WAYFINDING SIGNAGE
SCALE: 3" = 1'-0"

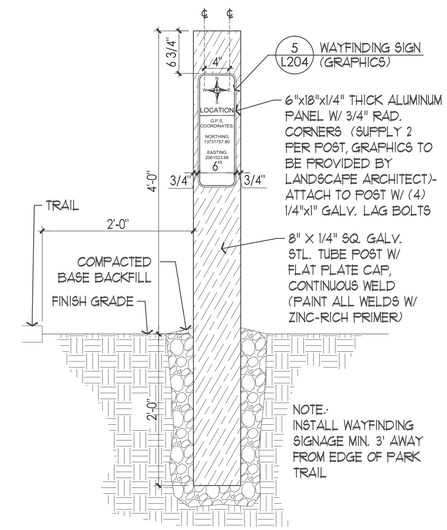

6 DETAIL: WAYFINDING SIGN
SCALE: 1" = 1'-0"

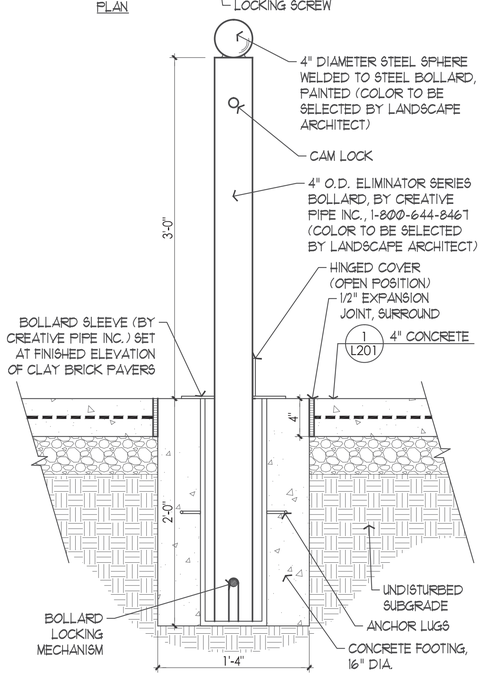

7 SECTION: REMOVABLE BOLLARD
SCALE: 1-1/2" = 1'-0"

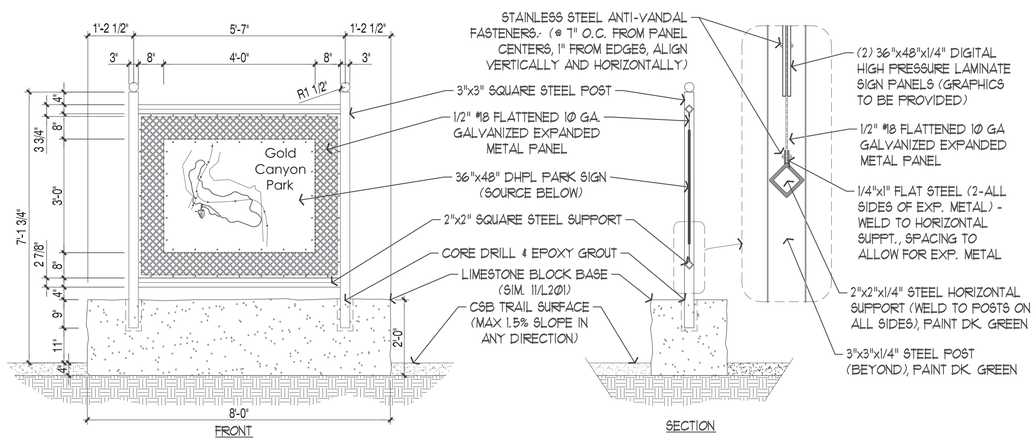

8 DETAIL: TRAILHEAD SIGNS
SCALE: 1/2" = 1'-0"

DIGITAL HIGH PRESSURE LAMINATE (DHPL) SIGNS PANELS (2 PER TRAILHEAD SIGN) BY FOSSIL INDUSTRIES, INC., 44 JEFRYN BLVD., DEER PARK, NY 11729, CONTACT MARK DECESARE AT 1-631-254-9200 EXT. 320, OR APPROVED EQUAL

REGISTERED LANDSCAPE ARCHITECT
Mary Ann Hasness
622
STATE OF TEXAS
11/7/2014

IDC Planners · Engineers · Program Managers
RIALTO STUDIO
Rialto Studio, Inc.
Landscape Architecture
2425 Broadway, Suite 105
San Antonio, Texas 78215
p 210.828.1155
f 210.828.1399

Date:	Revisions/Submissions

CITY OF SAN ANTONIO
TRANSPORTATION & CAPITAL IMPROVEMENTS

CITY OF SAN ANTONIO
CAPITAL IMPROVEMENTS
MANAGEMENT SERVICES DIVISION
MUNICIPAL PLAZA BUILDING
114 W. Commerce P.O. BOX 839966
San Antonio, Texas 78283-3966
TEL. (210) 207-2879 FAX (210) 207-2197

GOLD CANYON PARK
San Antonio, Texas
Construction Plan Set
LANDSCAPE
CONSTRUCTION DETAILS

L204

Drawn By:	Designed By:
SFA	SFA

Date: November 7, 2014
Project No. : RSI-1306
Filename:

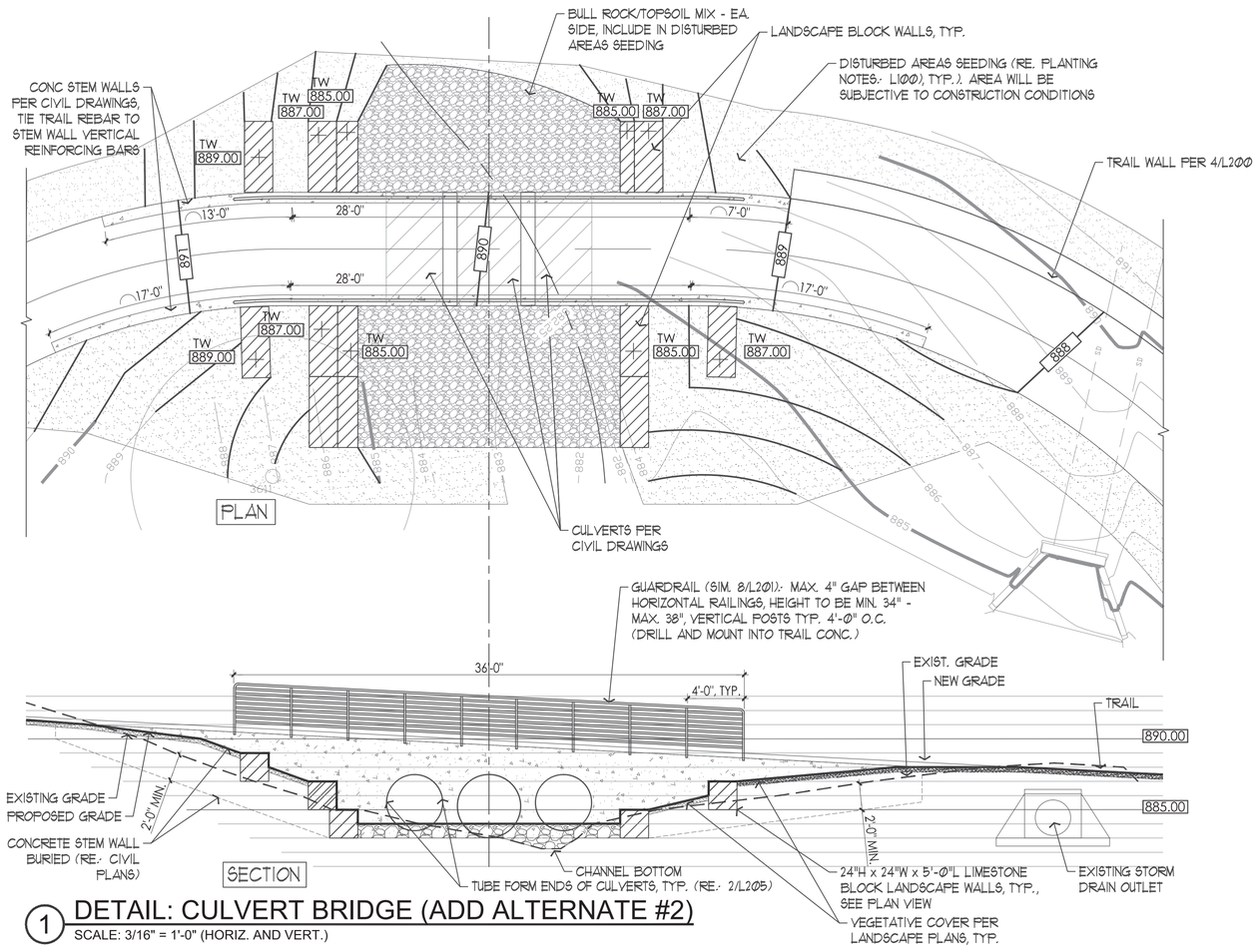

1 DETAIL: CULVERT BRIDGE (ADD ALTERNATE #2)

SCALE: 3/16" = 1'-0" (HORIZ. AND VERT.)

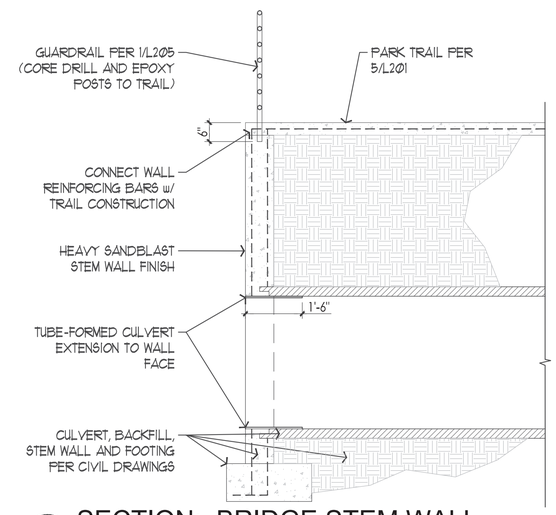

2 SECTION: BRIDGE STEM WALL

SCALE: 1/2" = 1'-0"

REGISTERED LANDSCAPE ARCHITECT
Mary Ann Rialto
622
STATE OF TEXAS
11/7/2014

IDC
Planners · Engineers · Program Managers

RIALTO STUDIO
Rialto Studio, Inc.
Landscape Architecture
2425 Broadway, Suite 105
San Antonio, Texas 78215
p 210.828.1155
f 210.828.1399

Date:	Revisions/Submissions

CITY OF SAN ANTONIO TRANSPORTATION & CAPITAL IMPROVEMENTS

CITY OF SAN ANTONIO
CAPITAL IMPROVEMENTS
MANAGEMENT SERVICES DIVISION
MUNICIPAL PLAZA BUILDING
114 W. Commerce P.O. BOX 839966
San Antonio, Texas 78283-3966
TEL. (210) 207-2879 FAX (210) 207-2197

GOLD CANYON PARK
San Antonio, Texas
Construction Plan Set
LANDSCAPE
CONSTRUCTION DETAILS

L205

Drawn By:	Designed By:
SFA	SFA

Date: November 7, 2014
Project No.: RSI-1306
Filename:

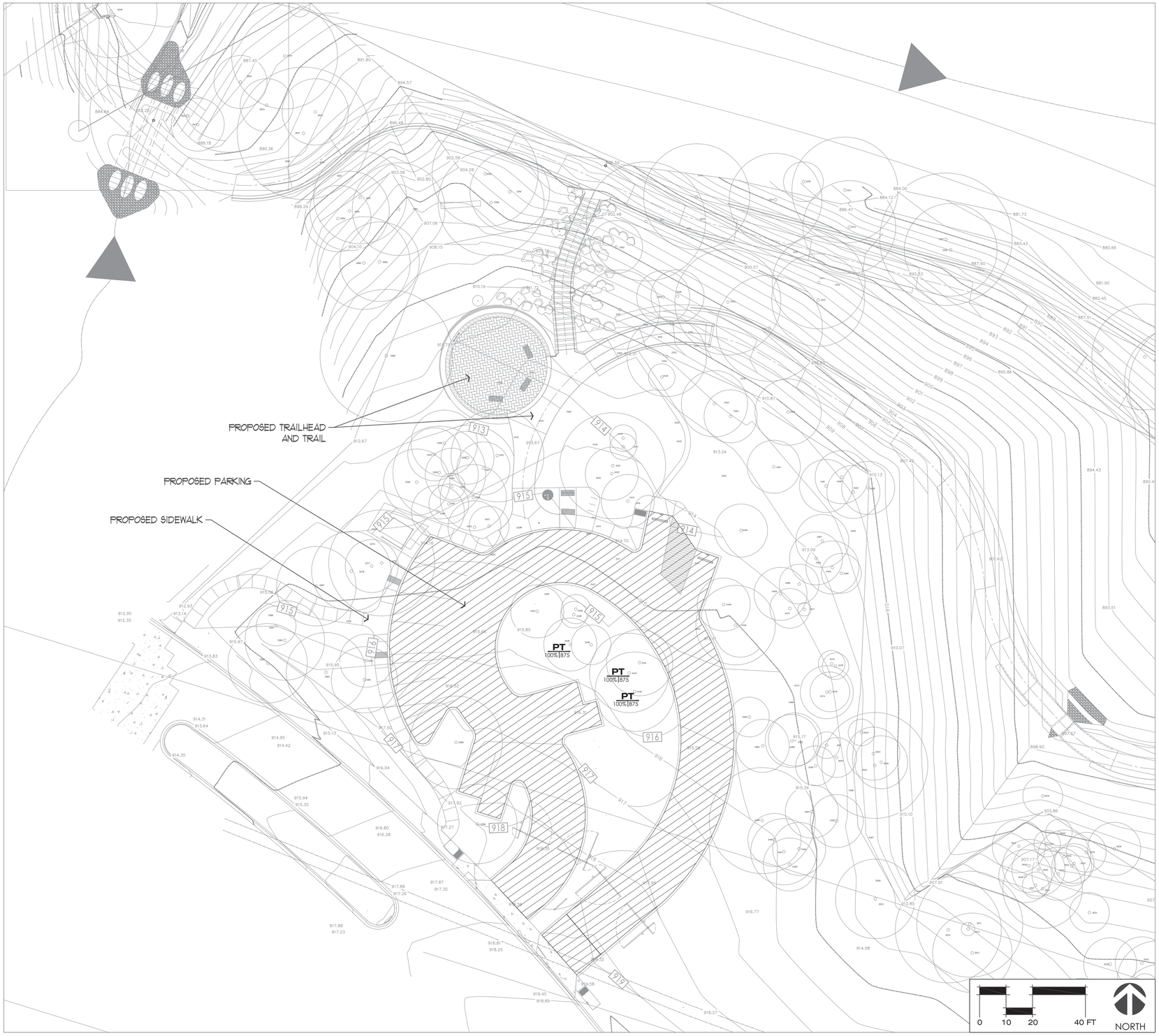

LEGEND

PARKING LOT SHADING AREA

PT 100% | 875
- PARKING LOT SHADE TREE
- TOTAL SF OF SHADE CREDIT
- PERCENTAGE OF SHADE CREDIT

LANDSCAPE ORDINANCE COMPLIANCE

MANDATORY CRITERIA

PARKING LOT SHADING

Shading shall be required for parking lots that are located within the project area and any parking areas (excluding driveways or garages) in residential areas. Canopy Trees, as defined in Appendix A, shall be provided to shade a minimum of twenty-five (25) percent of a parking lot for twenty (20) points. Medium or large trees may be used.

Fifteen (15) points are awarded when surface parking lots include canopy trees, which shade a minimum of fifty (50) percent of any individual parking lot.

Total paved area for new parking: 10,166 SF
Square feet of shade required for 25 points: 2,542 SF
(10,166 SF x 25% = 2,542 SF)

Existing trees preserved on a site within 12 feet of any edge of a parking lot or in an island or peninsula not less than 9 feet by 18 feet shall be calculated at 100% of the shade coverage shown in Appendix E, under "Shade Area":

#3438 Live Oak
#3441 Live Oak
#3442 Live Oak
Total = 4 x 875 SF

TOTAL Square feet of shade provided: 2,625 SF

POINTS EARNED 25 POINTS

REGISTERED LANDSCAPE ARCHITECT
RALPH W. RIALTO III
622
STATE OF TEXAS
11/7/2014

IDC
Planners · Engineers · Program Managers

RIALTO STUDIO
Rialto Studio, Inc.
Landscape Architecture
2425 Broadway, Suite 105
San Antonio, Texas 78215
P. 210-828.1166
F. 210-828.1346

Date:	Revisions/Submissions

CITY OF SAN ANTONIO
TRANSPORTATION & CAPITAL IMPROVEMENTS

CITY OF SAN ANTONIO
CAPITAL IMPROVEMENTS
MANAGEMENT SERVICES DIVISION
MUNICIPAL PLAZA BUILDING
114 W. Commerce P.O. BOX 839966
San Antonio, Texas 78283-3966
TEL. (210) 207-2879 FAX (210) 207-2197

GOLD CANYON PARK
San Antonio, Texas
Construction Plan Set

LANDSCAPE CODE COMPLIANCE PLAN

L300

Drawn By:	Designed By:
SFA	SFA

Date: November 7, 2014
Project No. : RSI-1306
Filename:

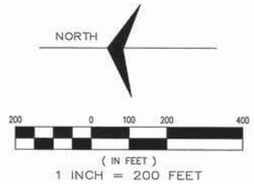

TEXAS COMMISSION ON ENVIRONMENTAL QUALITY
AQUIFER PROTECTION PLAN
GENERAL CONSTRUCTION NOTES

1. WRITTEN CONSTRUCTION NOTIFICATION MUST BE GIVEN TO THE APPROPRIATE TCEQ REGIONAL OFFICE NO LATER THAN 48 HOURS PRIOR TO COMMENCEMENT OF THE REGULATED ACTIVITY. INFORMATION MUST INCLUDE THE DATE ON WHICH THE REGULATED ACTIVITY WILL COMMENCE, THE NAME OF THE APPROVED PLAN FOR THE REGULATED ACTIVITY, AND THE NAME OF THE PRIME CONTRACTOR AND THE NAME AND TELEPHONE NUMBER OF THE CONTACT PERSON.

2. ALL CONTRACTORS CONDUCTING REGULATED ACTIVITIES ASSOCIATED WITH THIS PROJECT MUST BE PROVIDED WITH COMPLETE COPIES OF THE APPROVED WATER POLLUTION ABATEMENT PLAN AND THE TCEQ LETTER INDICATING THE SPECIFIC CONDITIONS OF ITS APPROVAL. DURING THE COURSE OF THESE REGULATED ACTIVITIES, THE CONTRACTORS ARE REQUIRED TO KEEP ON-SITE COPIES OF THE APPROVED PLAN AND APPROVAL LETTER.

3. IF ANY SENSITIVE FEATURE IS DISCOVERED DURING CONSTRUCTION, ALL REGULATED ACTIVITIES NEAR THE SENSITIVE FEATURE MUST BE SUSPENDED IMMEDIATELY. THE APPROPRIATE TCEQ REGIONAL OFFICE MUST BE IMMEDIATELY NOTIFIED OF ANY SENSITIVE FEATURES ENCOUNTERED DURING CONSTRUCTION. THE REGULATED ACTIVITIES NEAR THE SENSITIVE FEATURE MAY NOT PROCEED UNTIL THE TCEQ HAS REVIEWED AND APPROVED THE METHODS PROPOSED TO PROTECT THE SENSITIVE FEATURE AND THE EDWARDS AQUIFER FROM ANY POTENTIALLY ADVERSE IMPACTS TO WATER QUALITY.

4. NO TEMPORARY ABOVEGROUND HYDROCARBON AND HAZARDOUS SUBSTANCE STORAGE TANK SYSTEM IS INSTALLED WITHIN 150 FEET OF A DOMESTIC, INDUSTRIAL, IRRIGATION, OR PUBLIC WATER SUPPLY WELL, OR OTHER SENSITIVE FEATURE.

5. PRIOR TO COMMENCEMENT OF CONSTRUCTION, ALL TEMPORARY EROSION AND SEDIMENTATION (E&S) CONTROL MEASURES MUST BE PROPERLY SELECTED, INSTALLED, AND MAINTAINED IN ACCORDANCE WITH THE MANUFACTURERS SPECIFICATIONS AND GOOD ENGINEERING PRACTICES. CONTROLS SPECIFIED IN THE TEMPORARY STORM WATER SECTION OF THE APPROVED EDWARDS AQUIFER PROTECTION PLAN ARE REQUIRED DURING CONSTRUCTION. IF INSPECTIONS INDICATE A CONTROL HAS BEEN USED INAPPROPRIATELY, OR INCORRECTLY, THE APPLICANT MUST REPLACE OR MODIFY THE CONTROL FOR SITE SITUATIONS. THE CONTROLS MUST REMAIN IN PLACE UNTIL DISTURBED AREAS ARE REVEGETATED AND THE AREAS HAVE BECOME PERMANENTLY STABILIZED.

6. IF SEDIMENT ESCAPES THE CONSTRUCTION SITE, OFFSITE ACCUMULATIONS OF SEDIMENT MUST BE REMOVED AT A FREQUENCY SUFFICIENT TO MINIMIZE OFFSITE IMPACTS TO WATER QUALITY (E.G., FUGITIVE SEDIMENT IN STREET BEING WASHED INTO SURFACE STREAMS OR SENSITIVE FEATURES BY THE NEXT RAIN).

7. SEDIMENT MUST BE REMOVED FROM SEDIMENT TRAPS OR SEDIMENTATION PONDS NOT LATER THAN WHEN DESIGN CAPACITY HAS BEEN REDUCED BY 50%. A PERMANENT STAKE MUST BE PROVIDED THAT CAN INDICATE WHEN THE SEDIMENT OCCUPIES 50% OF THE BASIN VOLUME.

8. LITTER, CONSTRUCTION DEBRIS, AND CONSTRUCTION CHEMICALS EXPOSED TO STORMWATER SHALL BE PREVENTED FROM BECOMING A POLLUTANT SOURCE FOR STORMWATER DISCHARGES (E.G., SCREENING OUTFALLS, PICKED UP DAILY).

9. ALL SPOILS (EXCAVATED MATERIAL) GENERATED FROM THE PROJECT SITE MUST BE STORED ON-SITE WITH PROPER E&S CONTROLS. FOR STORAGE OR DISPOSAL OF SPOILS AT ANOTHER SITE ON THE EDWARDS AQUIFER RECHARGE ZONE, THE OWNER OF THE SITE MUST RECEIVE APPROVAL OF A WATER POLLUTION ABATEMENT PLAN FOR THE PLACEMENT OF FILL MATERIAL OR MASS GRADING PRIOR TO THE PLACEMENT OF SPOILS AT THE OTHER SITE.

10. STABILIZATION MEASURES SHALL BE INITIATED AS SOON AS PRACTICABLE IN PORTIONS OF THE SITE WHERE CONSTRUCTION ACTIVITIES HAVE TEMPORARILY OR PERMANENTLY CEASED, BUT IN NO CASE MORE THAN 14 DAYS AFTER THE CONSTRUCTION ACTIVITY IN THAT PORTION OF THE SITE HAS TEMPORARILY OR PERMANENTLY CEASED. WHERE THE INITIATION OF STABILIZATION MEASURES BY THE 14TH DAY AFTER CONSTRUCTION ACTIVITY TEMPORARY OR PERMANENTLY CEASE IS PRECLUDED BY WEATHER CONDITIONS, STABILIZATION MEASURES SHALL BE INITIATED AS SOON AS PRACTICABLE. WHERE CONSTRUCTION ACTIVITY ON A PORTION OF THE SITE IS TEMPORARILY CEASED, AND EARTH DISTURBING ACTIVITIES WILL BE RESUMED WITHIN 21 DAYS, TEMPORARY STABILIZATION MEASURES DO NOT HAVE TO BE INITIATED ON THAT PORTION OF SITE. IN AREAS EXPERIENCING DROUGHTS WHERE THE INITIATION OF STABILIZATION MEASURES BY THE 14TH DAY AFTER CONSTRUCTION ACTIVITY HAS TEMPORARILY OR PERMANENTLY CEASED IS PRECLUDED BY SEASONAL ARID CONDITIONS, STABILIZATION MEASURES SHALL BE INITIATED AS SOON AS PRACTICABLE.

11. THE FOLLOWING RECORDS SHALL BE MAINTAINED AND MADE AVAILABLE TO THE TCEQ UPON REQUEST: THE DATES WHEN MAJOR GRADING ACTIVITIES OCCUR; THE DATES WHEN CONSTRUCTION ACTIVITIES TEMPORARILY OR PERMANENTLY CEASE ON A PORTION OF THE SITE; AND THE DATES WHEN STABILIZATION MEASURES ARE INITIATED.

12. THE HOLDER OF ANY APPROVED EDWARD AQUIFER PROTECTION PLAN MUST NOTIFY THE APPROPRIATE REGIONAL OFFICE IN WRITING AND OBTAIN APPROVAL FROM THE EXECUTIVE DIRECTOR PRIOR TO INITIATING ANY OF THE FOLLOWING:

A. ANY PHYSICAL OR OPERATIONAL MODIFICATION OF ANY WATER POLLUTION ABATEMENT STRUCTURE(S), INCLUDING BUT NOT LIMITED TO PONDS, DAMS, BERMS, SEWAGE TREATMENT PLANTS, AND DIVERSIONARY STRUCTURES;

B. ANY CHANGE IN THE NATURE OR CHARACTER OF THE REGULATED ACTIVITY FROM THAT WHICH WAS ORIGINALLY APPROVED OR A CHANGE WHICH WOULD SIGNIFICANTLY IMPACT THE ABILITY OF THE PLAN TO PREVENT POLLUTION OF THE EDWARDS AQUIFER;

C. ANY DEVELOPMENT OF LAND PREVIOUSLY IDENTIFIED AS UNDEVELOPED IN THE ORIGINAL WATER POLLUTION ABATEMENT PLAN.

THESE GENERAL CONSTRUCTION NOTES MUST BE INCLUDED ON THE CONSTRUCTION PLANS PROVIDED TO THE CONTRACTOR AND ALL SUBCONTRACTORS.

TEMPORARY VEGETATION

DESCRIPTION: VEGETATION CAN BE USED AS A TEMPORARY OR PERMANENT STABILIZATION TECHNIQUE FOR AREAS DISTURBED BY CONSTRUCTION. VEGETATION EFFECTIVELY REDUCES EROSION IN SWALES, STOCKPILES, BERMS, MILD TO MEDIUM SLOPES, AND ALONG ROADWAYS. OTHER TECHNIQUES SUCH AS MATTING, MULCHES, AND GRADING MAY BE REQUIRED TO ASSIST IN THE ESTABLISHMENT OF VEGETATION.

MATERIALS:
THE TYPE OF TEMPORARY VEGETATION USED ON A SITE IS A FUNCTION OF THE SEASON AND THE AVAILABILITY OF WATER FOR IRRIGATION.
TEMPORARY VEGETATION SHOULD BE SELECTED APPROPRIATELY FOR THE AREA.
COUNTY AGRICULTURAL EXTENSION AGENTS ARE A GOOD SOURCE FOR SUGGESTIONS FOR TEMPORARY VEGETATION.
ALL SEED SHOULD BE HIGH QUALITY, U.S. DEPT. OF AGRICULTURE CERTIFIED SEED.

INSTALLATION:
GRADING MUST BE COMPLETED PRIOR TO SEEDING.
SLOPES SHOULD BE MINIMIZED.
EROSION CONTROL STRUCTURES SHOULD BE INSTALLED.
SEEDBEDS SHOULD BE WELL PULVERIZED, LOOSE, AND UNIFORM.
FERTILIZERS SHOULD BE APPLIED AT APPROPRIATE RATES.
SEEDING RATES SHOULD BE APPLIED AS RECOMMENDED BY THE COUNTY AGRICULTURAL EXTENSION AGENT.
THE SEED SHOULD BE APPLIED UNIFORMLY.
STEEP SLOPES SHOULD BE COVERED WITH APPROPRIATE SOIL STABILIZATION MATTING.

BLANKETS AND MATTING
DESCRIPTION: BLANKETS AND MATTING MATERIAL CAN BE USED AS AN AID TO CONTROL EROSION ON CRITICAL SITES DURING THE ESTABLISHMENT PERIOD OF PROTECTIVE VEGETATION. THE MOST COMMON USES ARE IN CHANNELS, INTERCEPTOR SWALES, DIVERSION DIKES, SHORT, STEEP SLOPES, AND ON TIDAL OR STREAM BANKS.

MATERIALS:
NEW TYPES OF BLANKETS AND MATTING MATERIALS ARE CONTINUOUSLY BEING DEVELOPED. THE TEXAS DEPARTMENT OF TRANSPORTATION (TXDOT) HAS DEFINED THE CRITICAL PERFORMANCE FACTORS FOR THESE TYPES OF PRODUCTS AND HAS ESTABLISHED MINIMUM PERFORMANCE STANDARDS WHICH MUST BE MET FOR ANY PRODUCT SEEKING TO BE APPROVED FOR USE WITHIN ANY OF TXDOT'S CONSTRUCTION OR MAINTENANCE ACTIVITIES. THE PRODUCTS THAT HAVE BEEN APPROVED BY TXDOT ARE ALSO APPROPRIATE FOR GENERAL CONSTRUCTION SITE STABILIZATION. TXDOT MAINTAINS A WEB SITE AT HTTP://WWW.DOT.STATE.TX.US/INSDTDOT/ORGCHART/CMD/EROSION/CONTENTS.HTM WHICH IS UPDATED AS NEW PRODUCTS ARE EVALUATED.

INSTALLATION:
INSTALL IN ACCORDANCE WITH THE MANUFACTURER'S RECOMMENDATIONS.
PROPER ANCHORING OF THE MATERIAL.
PREPARE A FRIABLE SEED BED RELATIVELY FREE FROM CLODS AND ROCKS AND ANY FOREIGN MATERIAL.
FERTILIZE AND SEED IN ACCORDANCE WITH SEEDING OR OTHER TYPE OF PLANTING PLAN.
EROSION STOPS SHOULD EXTEND BEYOND THE CHANNEL LINER TO FULL DESIGN CROSSSECTION OF THE CHANNEL.
A UNIFORM TRENCH PERPENDICULAR TO LINE OF FLOW MAY BE DUG WITH A SPADE OR A MECHANICAL TRENCHER.
EROSION STOPS SHOULD BE DEEP ENOUGH TO PENETRATE SOLID MATERIAL OR BELOW LEVEL OF RULING IN SANDY SOILS.
EROSION STOP MATS SHOULD BE WIDE ENOUGH TO ALLOW TURNOVER AT BOTTOM OF TRENCH FOR STAPLING, WHILE MAINTAINING THE TOP EDGE FLUSH WITH CHANNEL SURFACE.

MULCH
DESCRIPTION: MULCHING IS THE PROCESS OF APPLYING A MATERIAL TO THE EXPOSED SOIL SURFACE TO PROTECT IT FROM EROSIVE FORCES AND TO CONSERVE SOIL MOISTURE UNTIL PLANTS CAN BECOME ESTABLISHED. WHEN SEEDING CRITICAL SITES, SITES WITH ADVERSE SOIL CONDITIONS OR SEEDING ON OTHER THAN OPTIMUM SEEDING DATES, MULCH MATERIAL SHOULD BE APPLIED IMMEDIATELY AFTER SEEDING. SEEDING DURING OPTIMUM SEEDING DATES AND WITH FAVORABLE SOILS AND SITE CONDITIONS WILL NOT NEED TO BE MULCHED.

MATERIALS:
MULCH MAY BE SMALL GRAIN STRAW WHICH SHOULD BE APPLIED UNIFORMLY.
ON SLOPES 15 PERCENT OR GREATER, A BINDING CHEMICAL MUST BE APPLIED TO THE SURFACE.
WOODFIBER OR PAPERFIBER MULCH MAY BE APPLIED BY HYDROSEEDING.
MULCH NETTINGS MAY BE USED.
WOOD CHIPS MAY BE USED WHERE APPROPRIATE.

INSTALLATION:
MULCH ANCHORING SHOULD BE ACCOMPLISHED IMMEDIATELY AFTER MULCH PLACEMENT. THIS MAY BE DONE BY ONE OF THE FOLLOWING METHODS: PEG AND TWINE, MULCH NETTING, MULCH ANCHORING TOOL, OR LIQUID MULCH BINDERS.

SOD
DESCRIPTION: SOD IS APPROPRIATE FOR DISTURBED AREAS WHICH REQUIRE IMMEDIATE VEGETATIVE COVERS, OR WHERE SODDING IS PREFERRED TO OTHER MEANS OF VEGETATED ESTABLISHMENT. LOCATIONS PARTICULARLY SUITED TO STABILIZATION WITH SOD ARE WATERWAYS CARRYING INTERMITTENT FLOW, AREAS AROUND DROP INLETS OR IN VEGETATEDED SWALES, AND RESIDENTIAL OR COMMERCIAL LAWNS WHERE QUICK USE OR AESTHETICS ARE FACTORS. SOD IS COMPOSED OF LIVING PLANTS AND THOSE PLANTS MUST RECEIVE ADEQUATE CARE IN ORDER TO PROVIDE VEGETATIVE STABILIZATION ON A DISTURBED AREA.

MATERIALS:
SOD SHOULD BE MACHINE CUT AT A UNIFORM SOIL THICKNESS.
PIECES OF SOD SHOULD BE CUT TO THE SUPPLIER'S STANDARD WIDTH AND LENGTH.
TORN OR UNEVEN PADS ARE NOT ACCEPTABLE.
SECTIONS OF SOD SHOULD BE STRONG ENOUGH TO SUPPORT THEIR OWN WEIGHT AND RETAIN THEIR SIZE AND SHAPE WHEN SUSPENDED FROM A FIRM GRASP.
SOD SHOULD BE HARVESTED, DELIVERED, AND INSTALLED WITHIN A PERIOD OF 36 HOURS.

INSTALLATION:
AREAS TO BE SODDED SHOULD BE BROUGHT TO FINAL GRADE.
THE SURFACE SHOULD BE CLEARED OF ALL TRASH AND DEBRIS.
FERTILIZE ACCORDING TO SOIL TESTS.
FERTILIZER SHOULD BE WORKED INTO THE SOIL.
SOD SHOULD NOT BE CUT OR LAID IN EXCESSIVELY WET OR DRY WEATHER.
SOD SHOULD NOT BE LAID ON SOIL SURFACES THAT ARE FROZEN.
DURING PERIODS OF HIGH TEMPERATURE, THE SOIL SHOULD BE LIGHTLY IRRIGATED.
THE FIRST ROW OF SOD SHOULD BE LAID IN A STRAIGHT LINE WITH SUBSEQUENT ROWS PLACED PARALLEL TO AND BUTTING TIGHTLY AGAINST EACH OTHER.
LATERAL JOINTS SHOULD BE STAGGERED TO PROMOTE MORE UNIFORM GROWTH AND STRENGTH.
WHEREVER EROSION MAY BE A PROBLEM, SOD SHOULD BE LAID WITH STAGGERED JOINTS AND SECURED.
SOD SHOULD BE INSTALLED WITH THE LENGTH PERPENDICULAR TO THE SLOPE (ON THE CONTOUR).
SOD SHOULD BE ROLLED OR TAMPED.
SOD SHOULD BE IRRIGATED TO A SUFFICIENT DEPTH.
WATERING SHOULD BE PERFORMED AS OFTEN AS NECESSARY TO MAINTAIN SOIL MOISTURE.
THE FIRST MOWING SHOULD NOT BE ATTEMPTED UNTIL THE SOD IS FIRMLY ROOTED.
NOT MORE THAN ONE THIRD OF THE VEGETATED LEAF SHOULD BE REMOVED AT ANY ONE CUTTING.

STATE OF TEXAS
SUSAN D. LANDRETH
84711
LICENSED
PROFESSIONAL ENGINEER
8/26/14

IDC
Planners · Engineers · Program Managers

VICKREY & ASSOCIATES, INC.
CONSULTING ENGINEERS
12940 Country Parkway
San Antonio, Texas 78216
Voice: (210) 349-3271 Fax: (210) 349-2561
FIRM REGISTRATION NO.: F-159 © 2014

Date:	Revisions/Submissions

CITY OF SAN ANTONIO
TRANSPORTATION & CAPITAL IMPROVEMENTS

CITY OF SAN ANTONIO
CAPITAL IMPROVEMENTS
MANAGEMENT SERVICES DIVISION
MUNICIPAL PLAZA BUILDING
114 W. Commerce P.O. BOX 839966
San Antonio, Texas 78283-3966
TEL. (210) 207-2879 FAX (210) 207-2197

GOLD CANYON PARK
San Antonio, Texas
Construction Set
OVERALL WATER POLLUTION ABATEMENT PLAN

E100

Drawn By:	Designed By:
RA	SDL

Date:
August 26, 2014
Project No.:
40-00354
Filename:

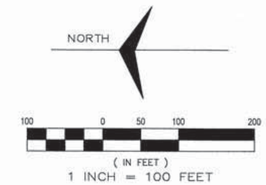

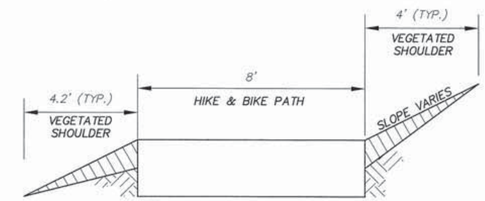

DETAIL
N.T.S.

GOLD CANYON PARK
TOTAL NATURAL VEGETATION - 2,423,267.77 S.F.

ENGINEERED VEGETATED FILTER STRIP	51,492 S.F.
NATURAL VEGETATION BUFFER	265,414 S.F.
ENGINEERED VEGETATED FILTER	9,394 S.F.
IMPERVIOUS COVER	67,040 S.F.

STATE OF TEXAS
SUSAN D. LANDRETH
84711
LICENSED
PROFESSIONAL ENGINEER
12/21/14

IDC
Planners - Engineers - Program Managers

VICKREY & ASSOCIATES, INC.
CONSULTING ENGINEERS
12940 Country Parkway
San Antonio, Texas 78216
Voice: (210) 349-3271 Fax: (210)349-2561
FIRM REGISTRATION NO: F-158 © 2014

Date:	Revisions/Submissions

CITY OF SAN ANTONIO
TRANSPORTATION & CAPITAL IMPROVEMENTS

CITY OF SAN ANTONIO
CAPITAL IMPROVEMENTS
MANAGEMENT SERVICES DIVISION
MUNICIPAL PLAZA BUILDING
114 W. Commerce P.O. BOX 839966
San Antonio, Texas 78283-3966
TEL. (210) 207-2879 FAX (210) 207-2197

GOLD CANYON PARK
San Antonio, Texas
Construction Set
OVERALL WATER POLLUTION
ABATEMENT PLAN

E101

Drawn By:	Designed By:
RA	SDL

Date:
August 26, 2014
Project No. :
40-00354
Filename:
R:\2503-001\Engineering\DWG\sh_base-layout.dwg