HISTORIC AND DESIGN REVIEW COMMISSION

October 21, 2015

Agenda Item No: 6

HDRC CASE NO:	**2015-413**
ADDRESS:	312 PEARL PKWY
LEGAL DESCRIPTION:	NCB 14164 (PEARL BREWERY DEV UT-2), BLOCK 1 LOT 906
ZONING:	IDZ RIO-2
CITY COUNCIL DIST.:	1
APPLICANT:	Jill Giles/Giles Parscale
OWNER:	Rio Perla Properties, LP
TYPE OF WORK:	Signage

REQUEST:

The applicant is requesting a Certificate of Appropriateness for approval to install signage at Like Honest Ice Creams consisting of the following:

1. Perimeter storefront window vinyl on eight windows with the following sizes 5'-4" in width by 7' in height on two windows, 5'-4" in width by 7'-2" in height on five windows and 2'-3" in width by 7'-2" in height on one window. The applicant has proposed colors of cream (PMS 607 U) and red (PMS 1797 C). This signage is to read "honest" and "ice creams".
2. Canopy mounted, aluminum dimensional letters that together is to be 4' in length, 1'-11" in height and 4" in depth that is to read "lick". The applicant has proposed the color to match the cream color of the vinyl window signage.
3. Two, double faced, canopy mounted pendant cabinet signs with acrylic push through letters reading "lick" that are to measure 2'-8" in height, 2'-6" in width and 4" in depth. These proposed signs will be internally lit, gloss painted pendant cabinets with acrylic push through letters.

APPLICABLE CITATIONS:

UDC Section 35-678. – Signs and Billboards in the RIO.

(a) General Provisions.

(1) This section governs all exterior signs and all interior signs hung within ten (10) feet of an exterior fenestration, or those signs intended to be read by exterior patrons.

A. All signage within an RIO district shall conform to all city codes and must have approval of the historic preservation officer prior to installation.

B. Permits must be obtained following approval of a certificate of appropriateness.

C. No sign shall be painted, constructed, erected, remodeled, refaced, relocated, expanded or otherwise altered until it has been approved and a permit has been obtained from the development services department in accordance with the provisions of this section and applicable city code.

D. Signs, visual displays or graphics shall advertise only the business on the premises unless otherwise allowed in this section.

(2) When reviewing applications for signage the historic preservation officer and the historic and design review commission shall consider the visual impact on nearby historic resources.

A. Signs should respect and respond to the environment and landmark or district character in which constructed.

B. Signs should respect and respond to the river improvement overlay districts character and the historic Riverwalk.

C. The content or advertising message carried by permitted signs shall pertain to the business located on the same premises as the sign or to any otherwise lawful noncommercial message that does not direct attention to a business operated for profit, or to a commodity or service for sale, provided that signs erected on buildings with multiple businesses within shall pertain to any such business within.

(3) For signs with changeable message panels, the changeable message area of the sign shall not exceed twenty-five (25) percent of the total sign area, except for gasoline price signs which shall not exceed seventy-five (75) percent of the total sign area. Electronic changeable message boards shall be prohibited.

(6) Special consideration should be given to the character of the sign itself proposed in the application, and whether the proposed sign has inherently historic characteristics which may fall outside of the guidelines presented below but which would contribute to the historic district, landmark or area for which it is being proposed. Additionally, when reviewing applications for signage the historic preservation officer and the historic and design review commission shall consider the visual impact on nearby historic resources.

(c)Standards for Sign Design and Placement. In considering whether to recommend approval or disapproval of an application to construct or alter signage on a building, object, site, or structure in a river improvement overlay district, review shall be guided by the following standards in addition to any specific design guidelines approved by city council.

(1)Primary sign design considerations shall be identification and legibility. Size, scale, height, color and location of signs shall be harmonious with, and properly related to, the overall character of the district and structure. Sign materials shall be compatible with that of the building facade. Highly reflective materials that will be difficult to read are not permitted.

(3)All graphic elements shall reinforce the architectural integrity of any building. Signs shall not disfigure, damage, mar, alter, or conceal architectural features or details and shall be limited to sizes that are in scale with the architecture and the streetscape. Emblems and symbols of identification used as principal structural or architectural design elements on a facade shall not be included in the total allowable signage per facade per structure when approved. Review shall be guided by the building's proportion and scale when such elements are incorporated.

(4)Graphics and signage may be illuminated by indirect, internal, or bare-bulb sources, providing that glare is not produced; by indirect light sources concealed by a hood or diffuser; by internal illumination with standard opal glass or other translucent material or with an equal or smaller light transmission factor. All illumination shall be steady and stationary. Neon lighting shall be permitted when used as an integral architectural element or artwork appropriate to the site. For purposes of this subsection, "Glare" shall mean an illumination level of six (6) Lux or greater at the property boundary. If internal illumination is used, it shall be designed to be subordinate to the overall building composition. Light fixtures should reflect the design period of the building on which they are placed. The use of ambient light from storefront or streetlights is encouraged.

(d)Proportion of Signs. For all signage, signage width and height must be in proportion to the facade, respecting the size, scale and mass of the facade, building height, and rhythms and sizes of window and door openings. The building facade shall be considered as part of an overall sign program but the sign shall be subordinate to the overall building composition. Additionally, signs shall respect and respond to the character and/or period of the area in which they are being placed.

(e)Number and Size of Signs.

(1)Number and Size. The historic and design review commission shall be guided in its decisions by the total number of businesses or services per building and the percentage of visible storefront occupied by each business or service. Applicants may apply for up to three (3) signs total. Total signage for all applicants shall not exceed fifty (50) square feet unless additional signs and/or additional total footage is approved. Additional square footage may be approved provided that the additional signage is in conformity with, and does not interfere with, the pedestrian experience on the Riverwalk. The additional square footage shall be based upon the size and scope of the site. Signs should reflect the type and speed of traffic they are meant to attract. Signs designed for pedestrians and drivers of slow moving cars should not be the same size as signs designed for highway traffic.

(2)Sign Area. The sign area shall be determined in the following manner:

A.Sign Areas. The area of a sign shall be computed on the actual area of the sign. Sign area shall be calculated as the area within a parallelogram, triangle, circle, semicircle or other regular geometric figure including all letters, figures, graphics or other elements of the sign, together with the framework or background of the sign. The supporting framework of the sign shall not be included in determining sign area unless such supporting framework forms an integral part of the sign display, as determined by the historic preservation officer. If the sign is located on a decorative fence or wall, when such fence or wall otherwise meets these or other ordinances or regulations and is clearly incidental to the display itself, the fence or wall shall not be included in the sign area. In the cases of signs with more than one (1) sign face, including but not restricted to double-faced signs, back-to-back signs, overhanging signs, and projecting signs, each side of the sign shall be included in total allowable signage area.

FINDINGS:

a. The applicant has proposed to install both canopy signage and vinyl window clings at Lick Honest Ice Creams in the Pearl. According to the UDC Section 35-678(e)(1), applicants may apply for a total of three signs that shall not exceed more than fifty (50) square feet unless additional signage and/or square footage is approved by the Historic and Design Review Commission. The applicant has proposed signage that exceeds the fifty (50) allowable square feet, however, per the Pearl's Signage Plan Guidelines, up to three window signs per thirty (30) linear feet of storefront may be used. Graphics may present the tenant's name, logo, address and simple service of product description. Staff finds this request appropriate and consistent with the Pearl Signage Plan Guidelines.
b. The applicant has proposed to install perimeter storefront window vinyl on eight windows with the following sizes 5'-4" in width by 7' in height on two windows, 5'-4" in width by 7'-2" in height on five windows and 2'-3" in width by 7'-2" in height on one window. The applicant has proposed colors of cream (PMS 607 U) and red (PMS 1797 C). This signage is to read "honest" and "ice creams". Overall, the total requested square footage for the proposed window vinyl is approximately 280 square feet. Staff does not find this amount of signage appropriate. Staff recommends the applicant reduce the amount of overall window signage to a size appropriate for its setting and objective.
c. Above the existing canopy, the applicant has proposed to mount an aluminum sign of dimensional letters that together are to be 4'-0" in length, 1'-11" in height and 4" in depth. The applicant has proposed to match the cream color of the proposed window signage. The applicant has not proposed to light this signage at this time. Staff finds this request appropriate and consistent with the UDC.
d. Beneath the existing canopy, the applicant has proposed to install two, double faced, signs with acrylic push through letters reading "lick" that are to measure 2'-8" in height, 2'-6" in width and 4" in depth. These proposed signs will be internally lit, gloss painted pendant cabinets with acrylic push through letters. Approximate square footage for both signs is twenty-five (25) total square feet. Staff finds this request appropriate and consistent with the UDC.

RECOMMENDATION:

Staff recommends approval of items #1 through #3 based on findings a through d.

CASE MANAGER:

Edward Hall

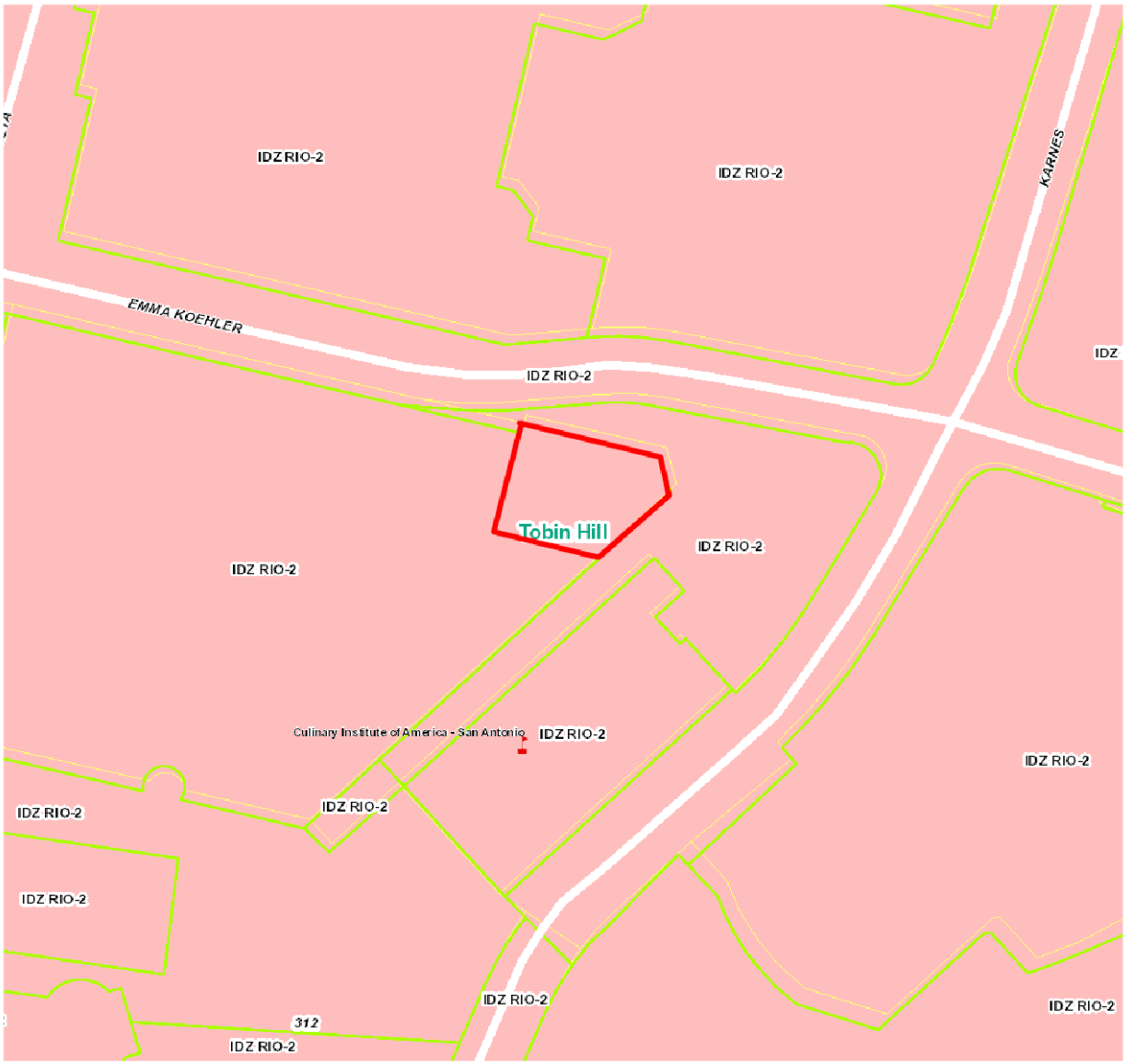

N

Flex Viewer

Powered by ArcGIS Server

Printed:Oct 13, 2015

The City of San Antonio does not guarantee the accuracy, adequacy, completeness or usefulness of any information. The City does not warrant the completeness, timeliness, or positional, thematic, and attribute accuracy of the GIS data. The GIS data, cartographic products, and associated applications are not legal representations of the depicted data. Information shown on these maps is derived from public records that are constantly undergoing revision. Under no circumstances should GIS-derived products be used for final design purposes. The City provides this information on an "as is" basis without warranty of any kind, express or implied, including but not limited to warranties of merchantability or fitness for a particular purpose, and assumes no responsibility for anyone's use of the information.

Pearl - Lick Honest Ice Creams

Site Location

GILES-PARSCALE

date	30 September 2015
project # / title	New Lick Signage
client	Pearl - Lick Honest Ice Creams

T 210.224.8378
F 210.579.6668
321 Sixth Street
San Antonio, Texas 78215
gilesparscale

Pearl - Lick Honest Ice Creams

Site Location

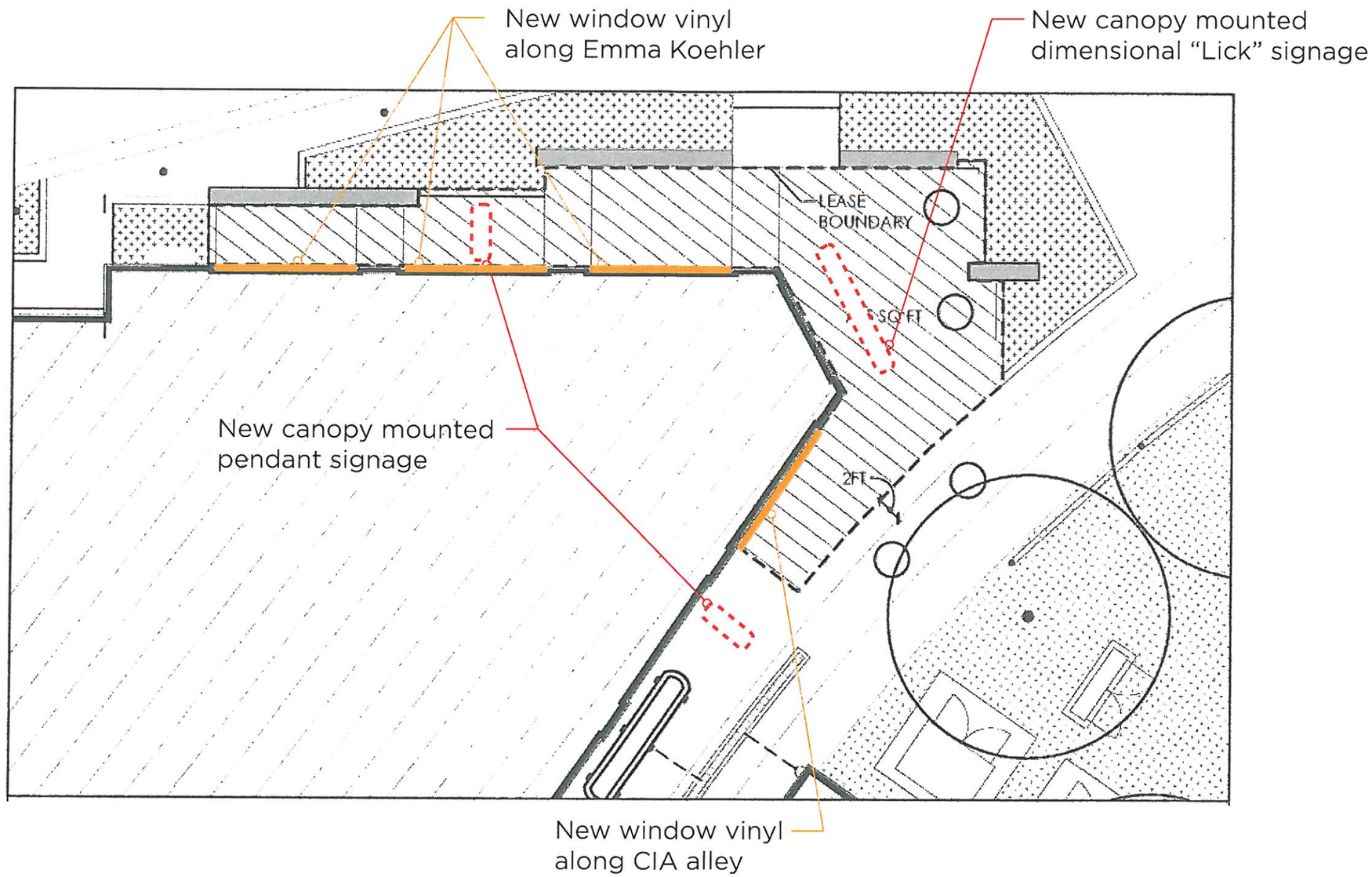

GILES-PARSCALE

date	30 September 2015
project # / title	New Lick Signage
client	Pearl - Lick Honest Ice Creams

T 210.224.8378
F 210.579.6668
321 Sixth Street
San Antonio, Texas 78215
gilesparscale

Pearl - Lick Honest Ice Creams

Window Vinyl

Approx: 5'-4" x 7'-0"

Approx: 5'-4" x 7'-2"

Match: PMS 607 U

Match: PMS 1797 C

CIA Alley Window Vinyl

Emma Koehler Window Vinyl 1

Approx: 5'-4" x 7'-2"

Approx: 2'-3" x 7'-2"

Approx: 5'-4" x 7'-2"

Match: PMS 607 U

Emma Koehler Window Vinyl 2

Emma Koehler Window Vinyl 3

GILES-PARSCALE

date	30 September 2015
project # / title	New Lick Signage
client	Pearl - Lick Honest Ice Creams

T 210.224.8378
F 210.579.6668
321 Sixth Street
San Antonio, Texas 78215
gilesparscal

Pearl - Lick Honest Ice Creams

Lick Canopy Signage

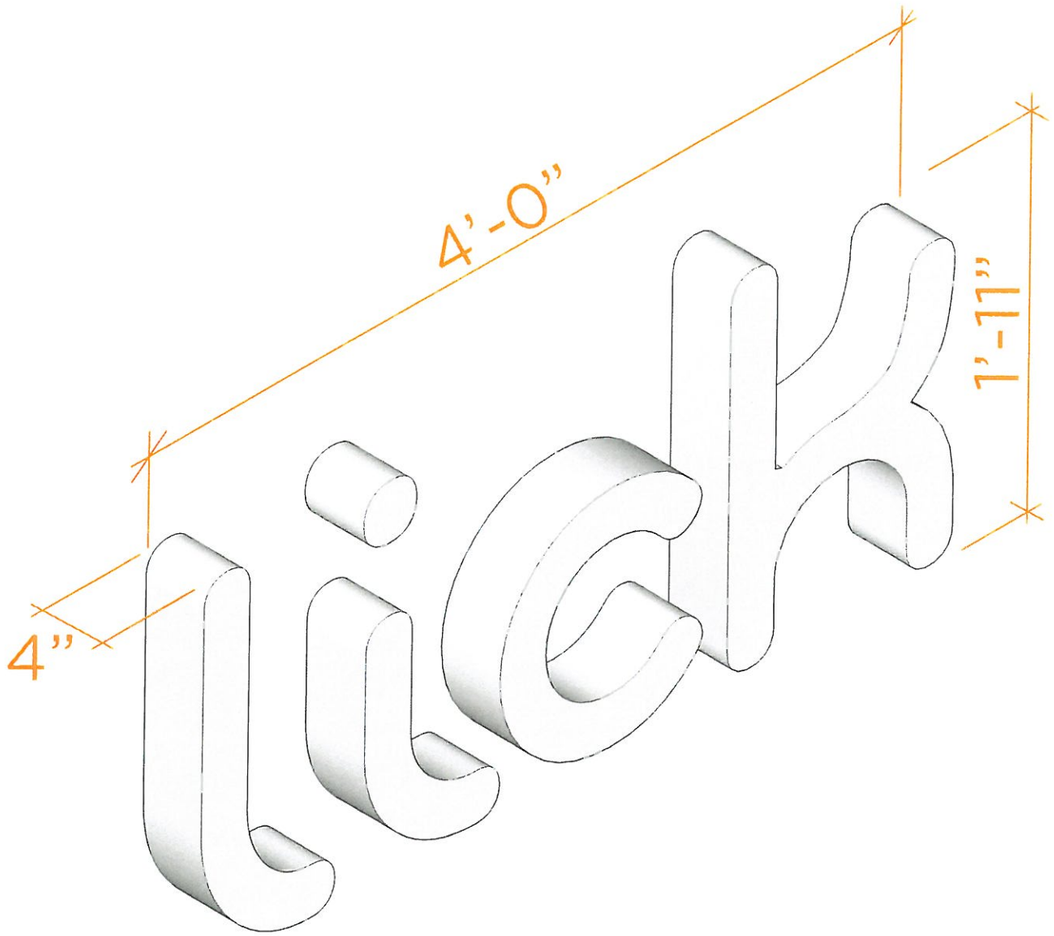

4" Thick signage foam or aluminum letters
Color to match: PMS 607 U

Proposed Signage

GILES-PARSCALE

date	30 September 2015
project # / title	New Lick Signage
client	Pearl - Lick Honest Ice Creams

T 210.224.8378
F 210.579.6668
321 Sixth Street
San Antonio, Texas 78215
gilesparscale

Pearl - Lick Honest Ice Creams

Canopy Pendant Sign

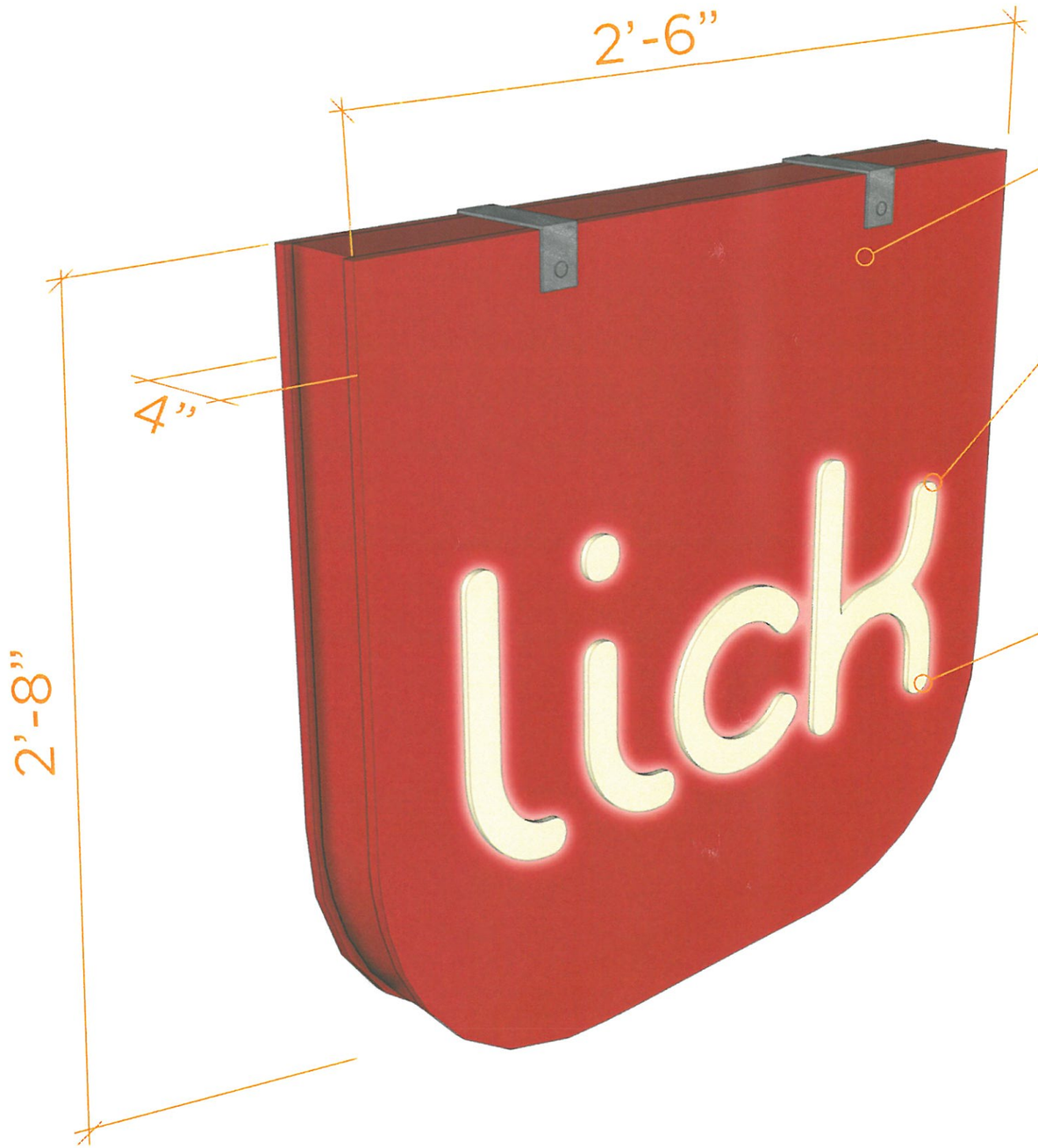

Gloss painted pendant cabinet
Match PMS: 1797 C

Acrylic push through letters
Cabinet internally lit
Letter color to match: PMS 607 U

Acrylic push through letters
11.25" Height x 24.75 Width x .25" D

Proposed Double Sided Pendant Cabinet Sign

GILES-PARSCALE

date	30 September 2015
project # / title	New Lick Signage
client	Pearl - Lick Honest Ice Creams

T 210.224.8378
F 210.579.6668
321 Sixth Street
San Antonio, Texas 78215
gilesparscal

lick
honest
ice creams

Pearl - Lick Honest Ice Creams

New Signage

GILES-PARSCALE

date	30 September 2015
project # / title	New Lick Signage
client	Pearl - Lick Honest Ice Creams

T 210.224.8378
F 210.579.6668
321 Sixth Street
San Antonio, Texas 78215
gilesparscale

Pearl - Lick Honest Ice Creams

New Signage

New canopy mounted signage
with up-lighting
Color to match: PMS 607 U

Paint underside of canopy.
Wash coat of SW 6750 "Waterfall"

New pendant signage along pedestrian p

Paint door "Lick" red
Match: PMS 1797 C

New Window Vinyl

Proposed Signage

GILES-PARSCALE

date	30 September 2015
project # / title	New Lick Signage
client	Pearl - Lick Honest Ice Creams

T 210.224.8378
F 210.579.6668
321 Sixth Street
San Antonio, Texas 78215
gilesparscale

Pearl - Lick Honest Ice Creams

Window Vinyl

Emma Koehler Facade Vinyl

GILES-PARSCALE

date	30 September 2015
project # / title	New Lick Signage
client	Pearl - Lick Honest Ice Creams

T 210.224.8378
F 210.579.6668
321 Sixth Street
San Antonio, Texas 78215
gilesparscal

Pearl - Lick Honest Ice Creams

New Signage

Sketchup Site study

Parking Garage Path

GILES-PARSCALE

date	30 September 2015
project # / title	New Lick Signage
client	Pearl - Lick Honest Ice Creams

T 210.224.8378
F 210.579.6668
321 Sixth Street
San Antonio, Texas 78215
gilesparscal

Pearl - Lick Honest Ice Creams

New Signage

Sketchup Site study

Entrance

GILES-PARSCALE

date	30 September 2015
project # / title	New Lick Signage
client	Pearl - Lick Honest Ice Creams

T 210.224.8378
F 210.579.6668
321 Sixth Street
San Antonio, Texas 78215
gilesparscal

Pearl - Lick Honest Ice Creams

New Signage

Sketchup Site study

CIA pathway

GILES-PARSCALE

date	30 September 2015
project # / title	New Lick Signage
client	Pearl - Lick Honest Ice Creams

T 210.224.8378
F 210.579.6668
321 Sixth Street
San Antonio, Texas 78215
gilesparscal

Pearl - Lick Honest Ice Creams

Neighborhood Precedent

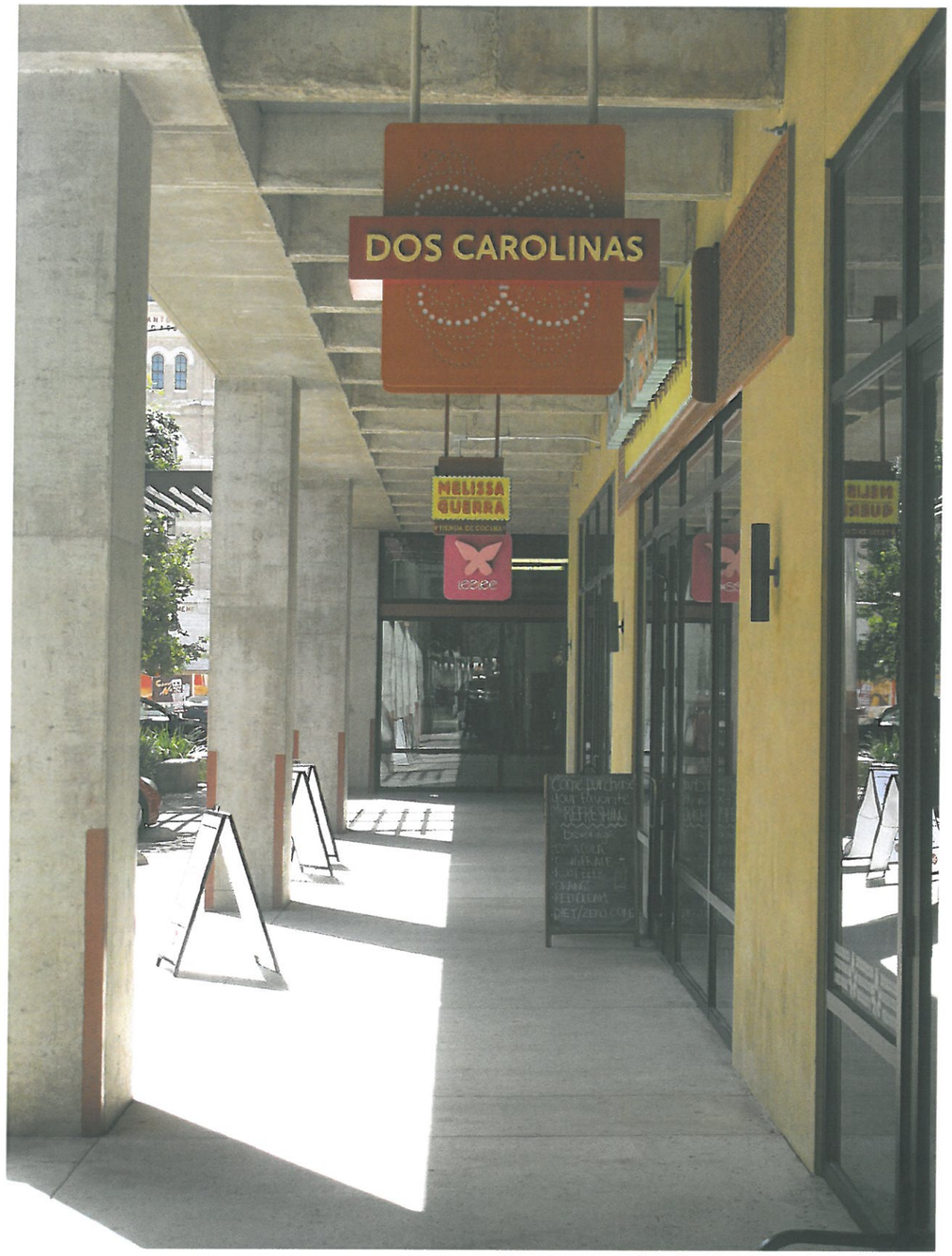

Pearl Pendant Sign Precedents

Canopy Dimensional Letter Precedent

Canopy Dimensional Letter Precedent

GILES-PARSCALE

date	30 September 2015
project # / title	New Lick Signage
client	Pearl - Lick Honest Ice Creams

T 210.224.8378
F 210.579.6668
321 Sixth Street
San Antonio, Texas 78215
gilesparscal