HISTORIC AND DESIGN REVIEW COMMISSION

July 06, 2016

Agenda Item No: 6

HDRC CASE NO:	**2016-247**
ADDRESS:	415 CEDAR ST
LEGAL DESCRIPTION:	NCB 2968 BLK 3 LOT 4
ZONING:	RM4 H HS
CITY COUNCIL DIST.:	1
DISTRICT:	King William Historic District
LANDMARK:	Pfeiffer, A - House
APPLICANT:	Jim Poteet/Poteet Architects, LP
OWNER:	James & Kate Ball
TYPE OF WORK:	Approval of windows for previously approved addition

REQUEST:

The applicant is requesting a Certificate of Appropriateness for approval of the proposed windows in the previously approved addition at 415 Cedar.

APPLICABLE CITATIONS:

Historic Design Guidelines, Chapter 3, Guidelines for Additions

4. Architectural Details

A. GENERAL
i. Historic context—Design additions to reflect their time while respecting the historic context. Consider character-defining features and details of the original structure in the design of additions. These architectural details include roof form, porches, porticos, cornices, lintels, arches, quoins, chimneys, projecting bays, and the shapes of window and door openings.
ii. Architectural details—Incorporate architectural details that are in keeping with the architectural style of the original structure. Details should be simple in design and compliment the character of the original structure. Architectural details that are more ornate or elaborate than those found on the original structure should not be used to avoid drawing undue attention to the addition.
iii. Contemporary interpretations—Consider integrating contemporary interpretations of traditional designs and details for additions. Use of contemporary window moldings and door surroundings, for example, can provide visual interest while helping to convey the fact that the addition is new.

FINDINGS:

a. The addition to the primary historic structure at 415 Cedar received final approval at the November 4, 2015, Historic and Design Review Commission meeting. A stipulation of that approval was for the applicant to return to the HDRC with additional information including a window study regarding the proposed windows, their framing and materials as well as their appropriateness for the King William Historic District.
b. Staff performed a site visit on June 22, 2016, where staff observed the active restoration of the primary historic structure, much of which includes repairs to structural elements.
c. According to the Guidelines for Additions, an addition's windows should reflect their own time while respecting the historic context of the primary structure. Additionally, contemporary interpretations on traditional designs and details should be used throughout an addition. The applicant has proposed to install aluminum clad wood windows throughout the addition that include one over one double hung windows, fixed windows and casement windows. Staff finds that the proposed windows feature elements, proportions and design characteristics relative to those found on the primary historic structure. Staff finds this appropriate and consistent with the Guidelines.
d. To ensure that an appropriate façade depth is maintained, staff finds that each window should be inset at least two to three inches within each wall. The applicant has provided sections noting the proposed framing method. Staff

finds the applicant's proposed framing method appropriate and consistent with the Historic Design Guidelines, Guidelines for Windows.

RECOMMENDATION:

Staff recommends approval as submitted based on findings a through c.

CASE MANAGER:

Edward Hall

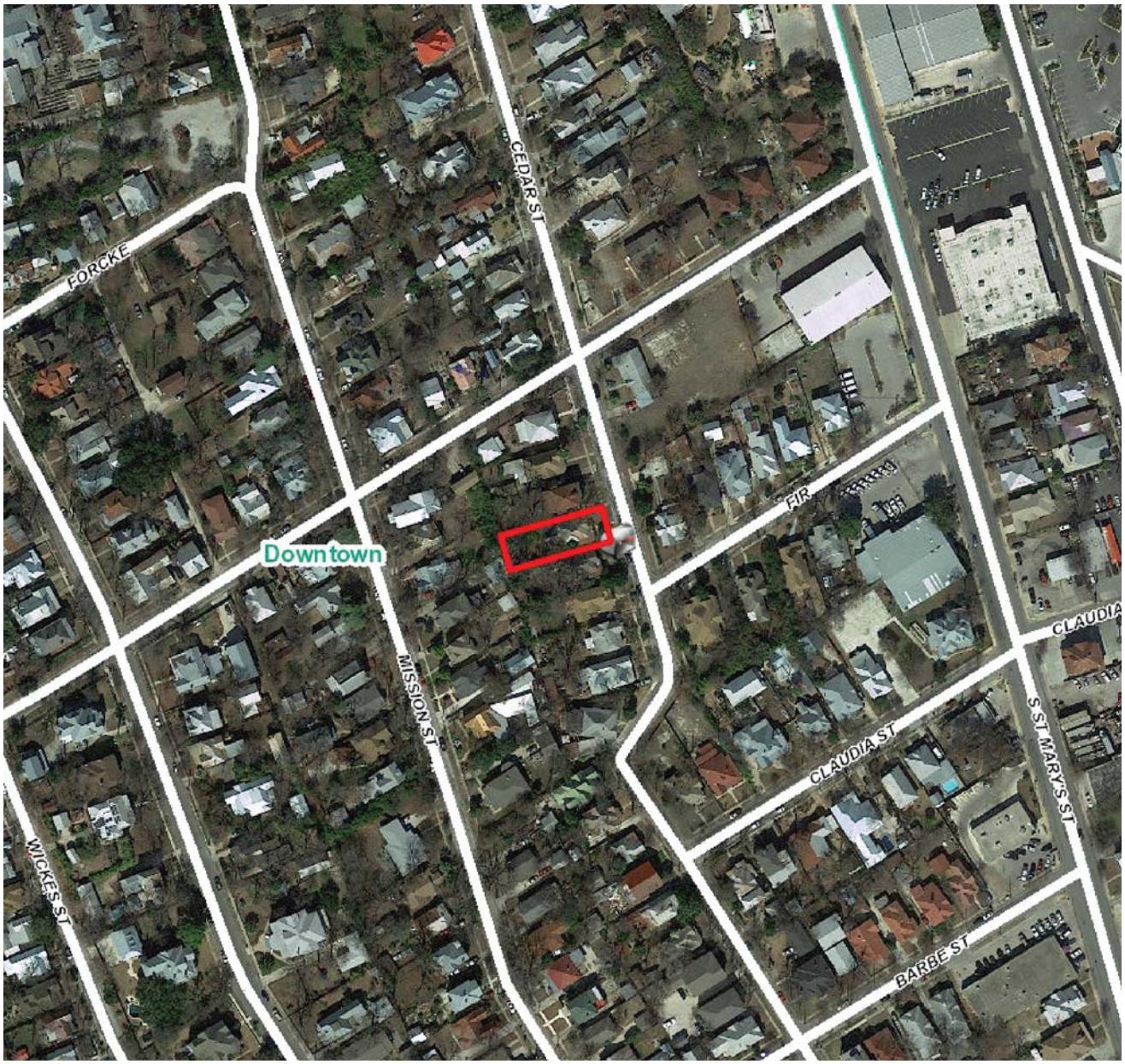

N

Flex Viewer

Powered by ArcGIS Server

Printed:Jun 14, 2016

The City of San Antonio does not guarantee the accuracy, adequacy, completeness or usefulness of any information. The City does not warrant the completeness, timeliness, or positional, thematic, and attribute accuracy of the GIS data. The GIS data, cartographic products, and associated applications are not legal representations of the depicted data. Information shown on these maps is derived from public records that are constantly undergoing revision. Under no circumstances should GIS-derived products be used for final design purposes. The City provides this information on an "as is" basis without warranty of any kind, express or implied, including but not limited to warranties of merchantability or fitness for a particular purpose, and assumes no responsibility for anyone's use of the information.

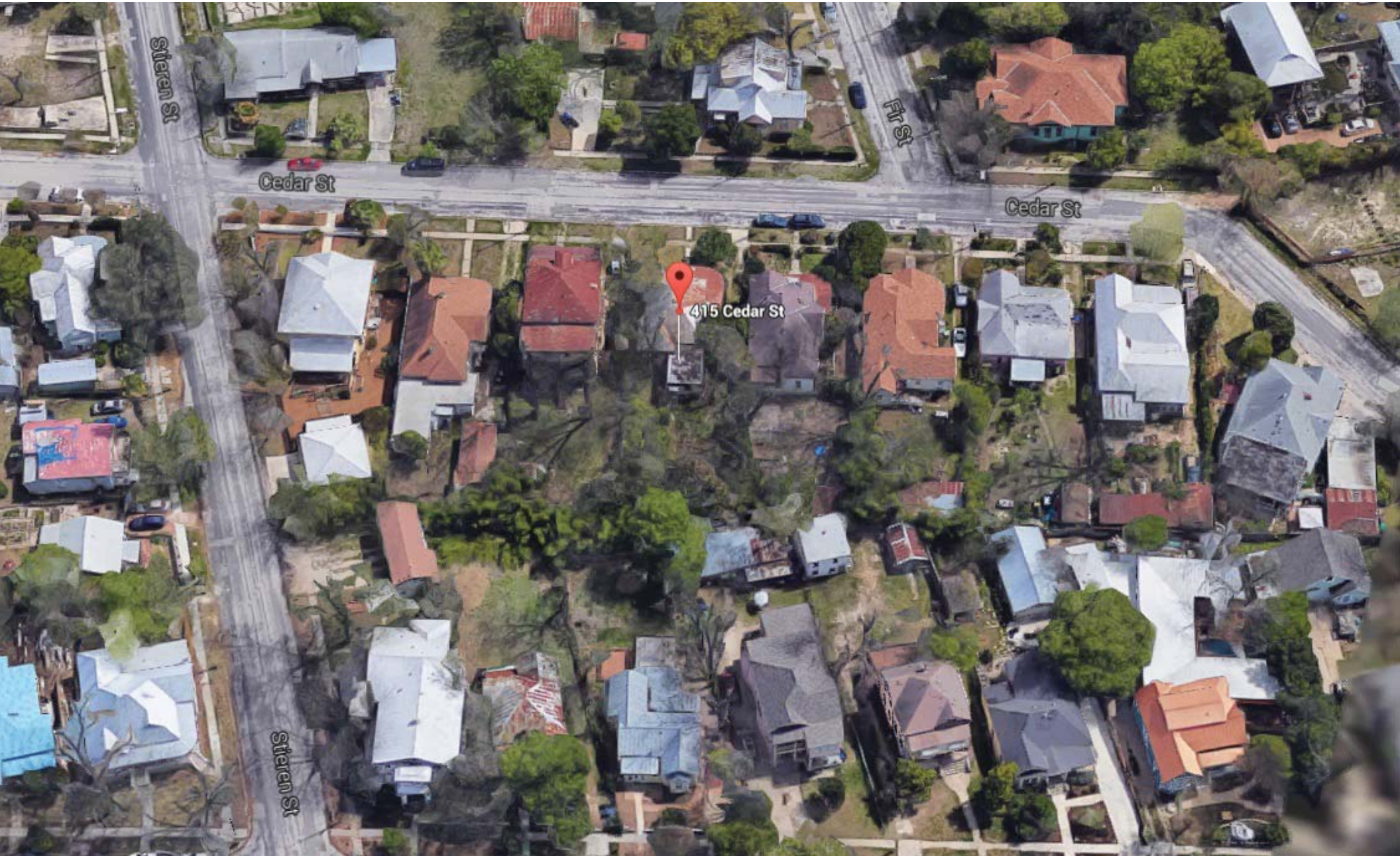
Stieren St
Cedar St
Fir St
Cedar St
415 Cedar St
Stieren St

HIGH SIERRA
AWAY
SWMD
CITY of SAN ANTONIO
NOTICE of HEARING
HISTORIC & DESIGN
REVIEW COMMISSION
ADDRESS:
REQUEST:
HEARING DATE:
TIME: 3:00 P.M.
FOR MORE INFORMATION CONTACT
(210) 215-9274
ALL HDRC MEETINGS TAKE PLACE AT 1901 S. ALAMO

1 415 Cedar
View looking west

415 CEDAR ST	**VIEW**
DATE: JUNE 9, 2016	
POTEET ARCHITECTS	PAGE 7 OF 10

2 415 Cedar
View looking south west

415 CEDAR ST	**VIEW**
DATE: JUNE 9, 2016	
POTEET ARCHITECTS	PAGE 8 OF 10

3 415 Cedar
View looking south east

415 CEDAR ST	**VIEW**
DATE: JUNE 9, 2016	
POTEET ARCHITECTS	PAGE 9 OF 10

4 415 Cedar
View looking south west

415 CEDAR ST	**VIEW**
DATE: JUNE 9, 2016	
POTEET ARCHITECTS	PAGE 10 OF 10

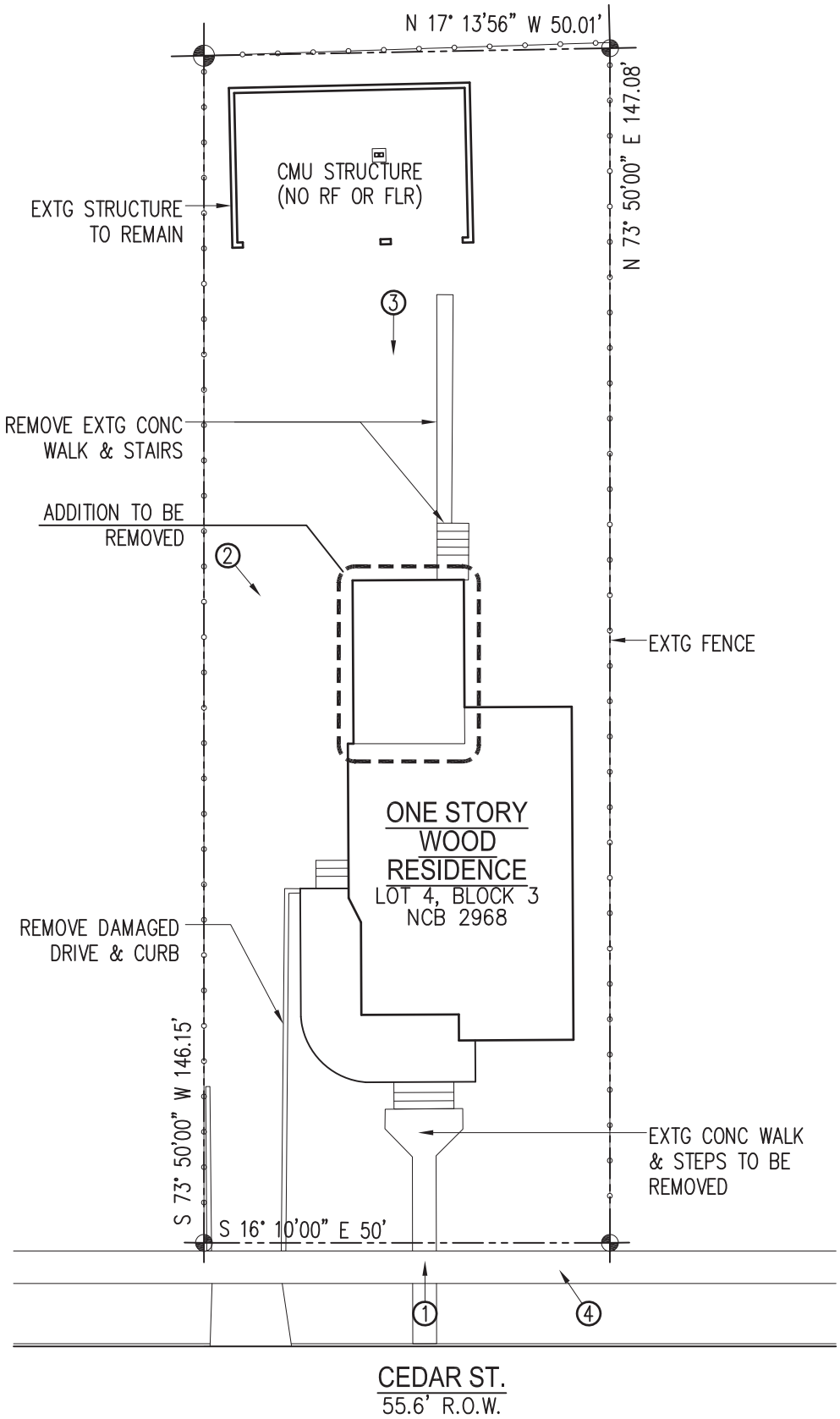

1

EXTG SITE PLAN

SCALE: 1" = 20'-0"

415 CEDAR ST	A0.1
DATE: JUNE 9, 2015	
POTEET ARCHITECTS, LP	SHT 1 OF 10

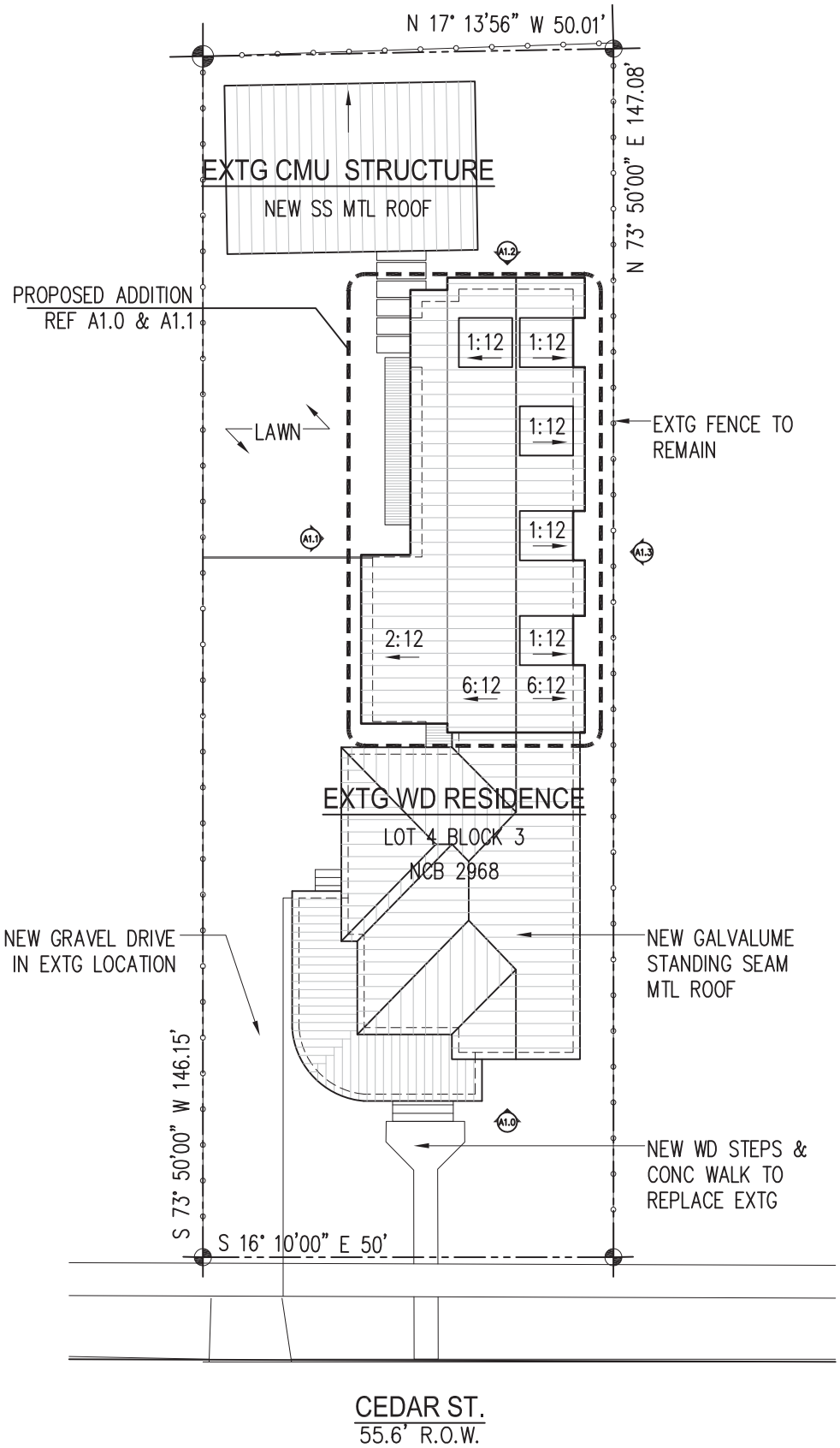

1 SITE PLAN

SCALE: 1" = 20'-0"

415 CEDAR ST	A0.2
DATE: JUNE 9, 2015	
POTEET ARCHITECTS, LP	SHT 2 OF 10

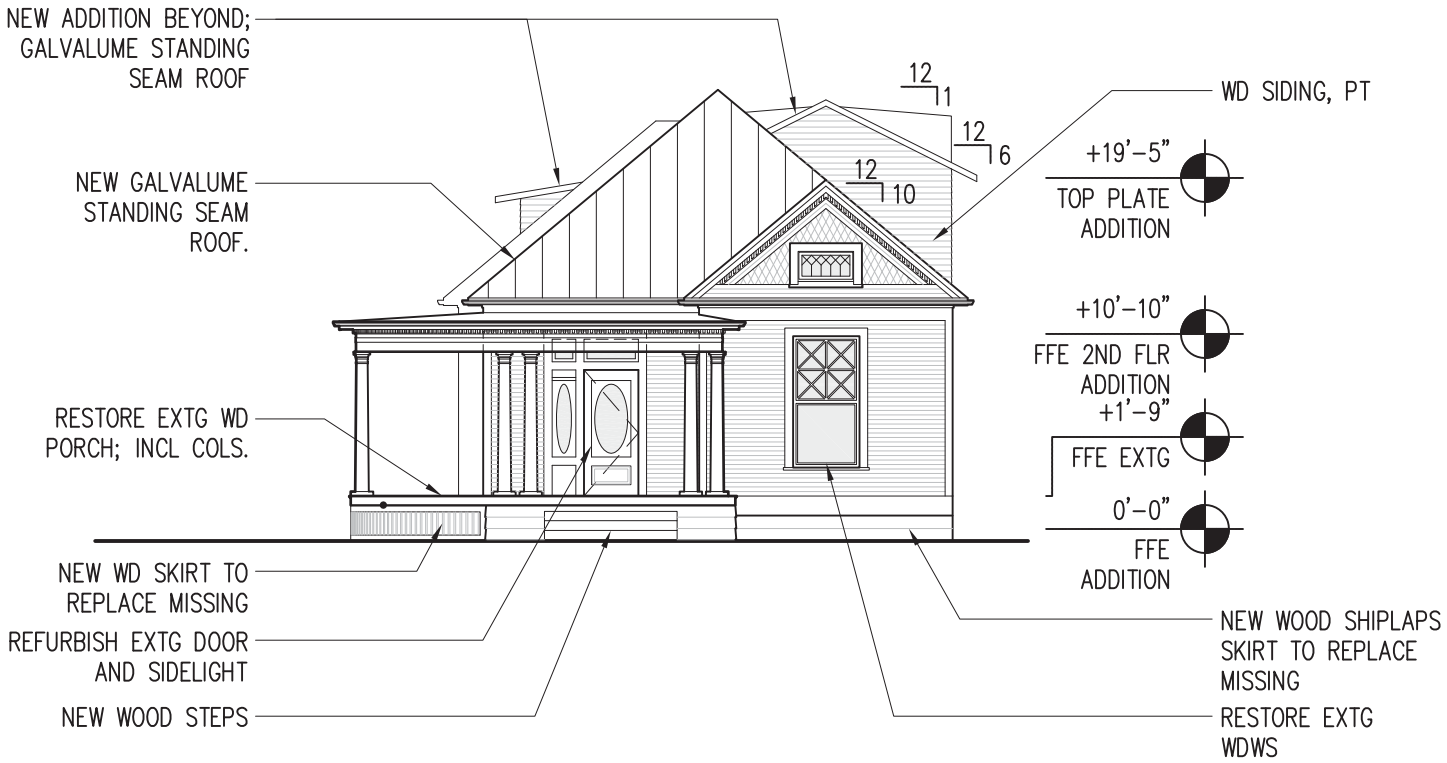

EXTERIOR ELEVATION: EAST

SCALE: 3/32" = 1'-0"

415 CEDAR ST	A1.0
DATE: JUNE 9, 2015	
POTEET ARCHITECTS, LP	SHT 3 OF 10

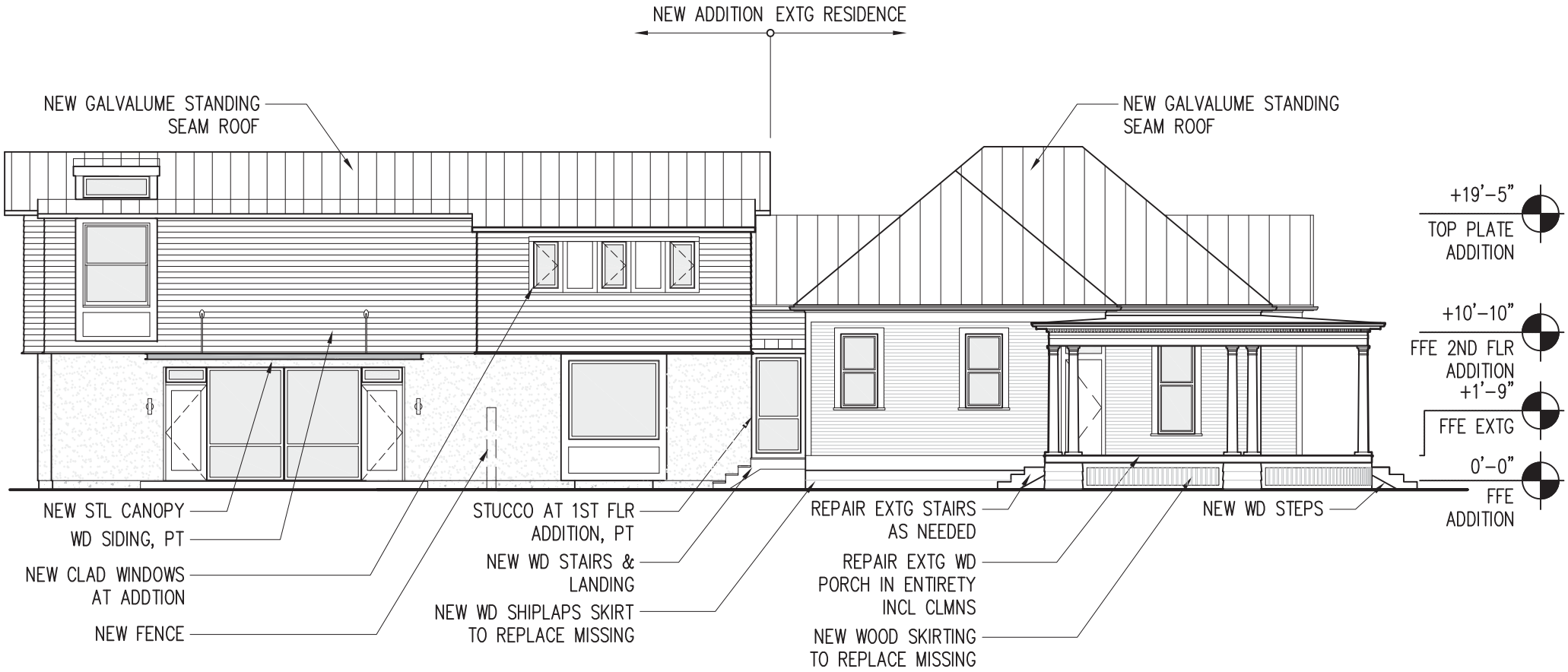

EXTERIOR ELEVATION: SOUTH

SCALE: 3/32" = 1'-0"

415 CEDAR ST	A1.1
DATE: JUNE 9, 2015	
POTEET ARCHITECTS, LP	SHT 4 OF 10

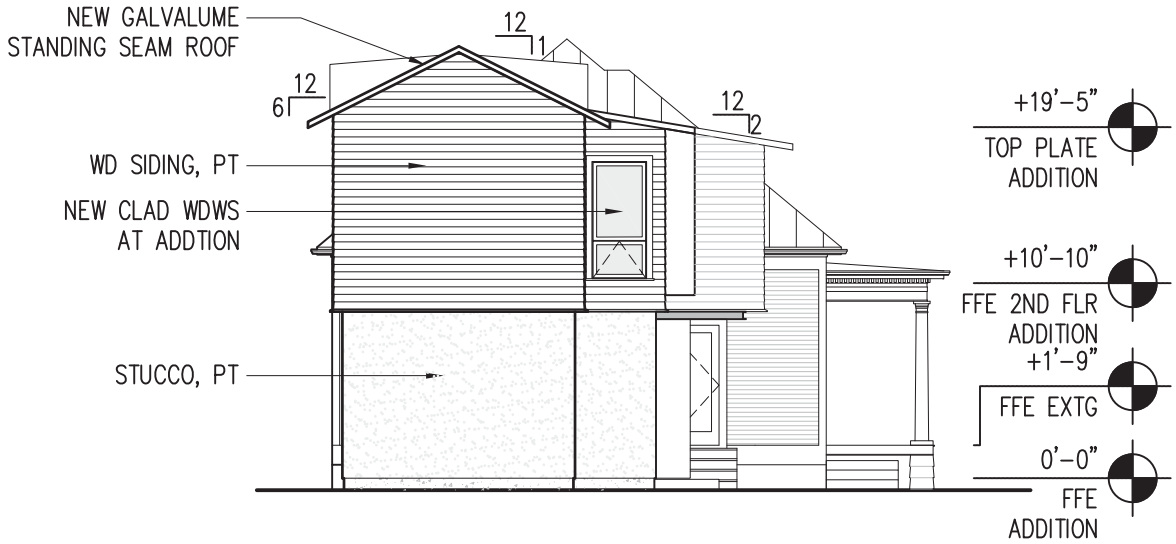

EXTERIOR ELEVATION: WEST

SCALE: 3/32" = 1'-0"

415 CEDAR ST	A1.2
DATE: JUNE 9, 2015	
POTEET ARCHITECTS, LP	SHT 5 OF 10

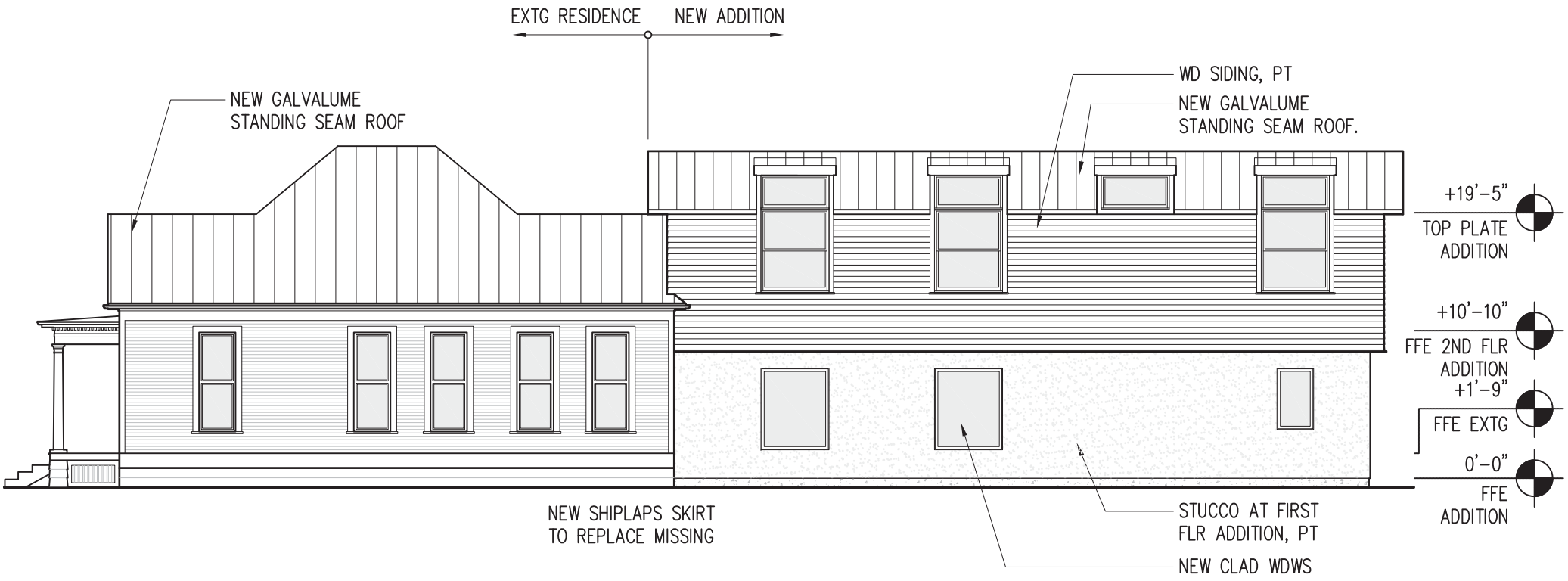

EXTERIOR ELEVATION: NORTH

SCALE: 3/32" = 1'-0"

415 CEDAR ST	A1.3
DATE: JUNE 9, 2015	
POTEET ARCHITECTS, LP	SHT 6 OF 10

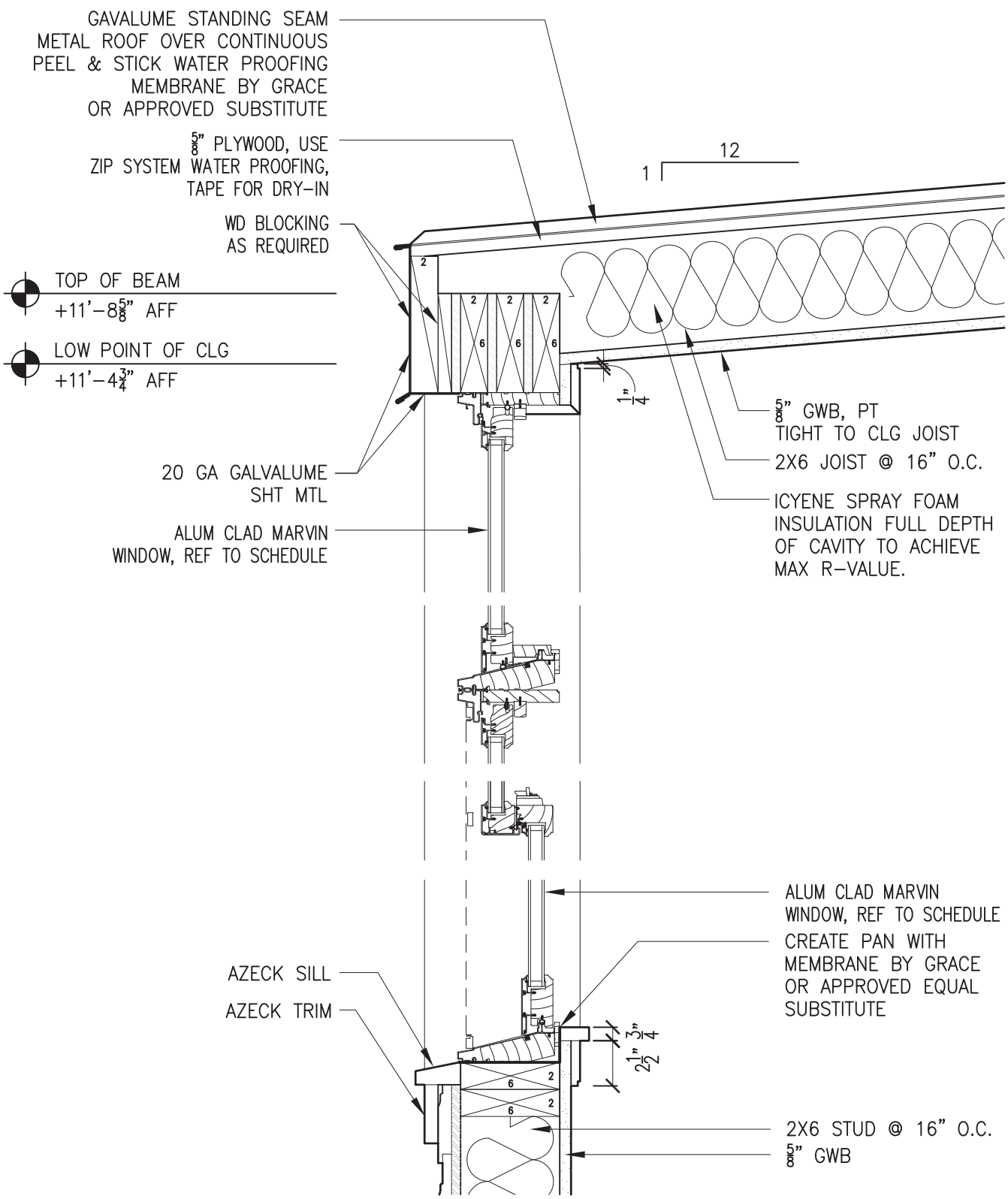

1 **SECTION:** WINDOW K

SCALE: 1 1/2" = 1'-0"

415 CEDAR	A2.1
DATE: JUNE 14, 2016	
POTEET ARCHITECTS LP	PAGE 2 OF 2

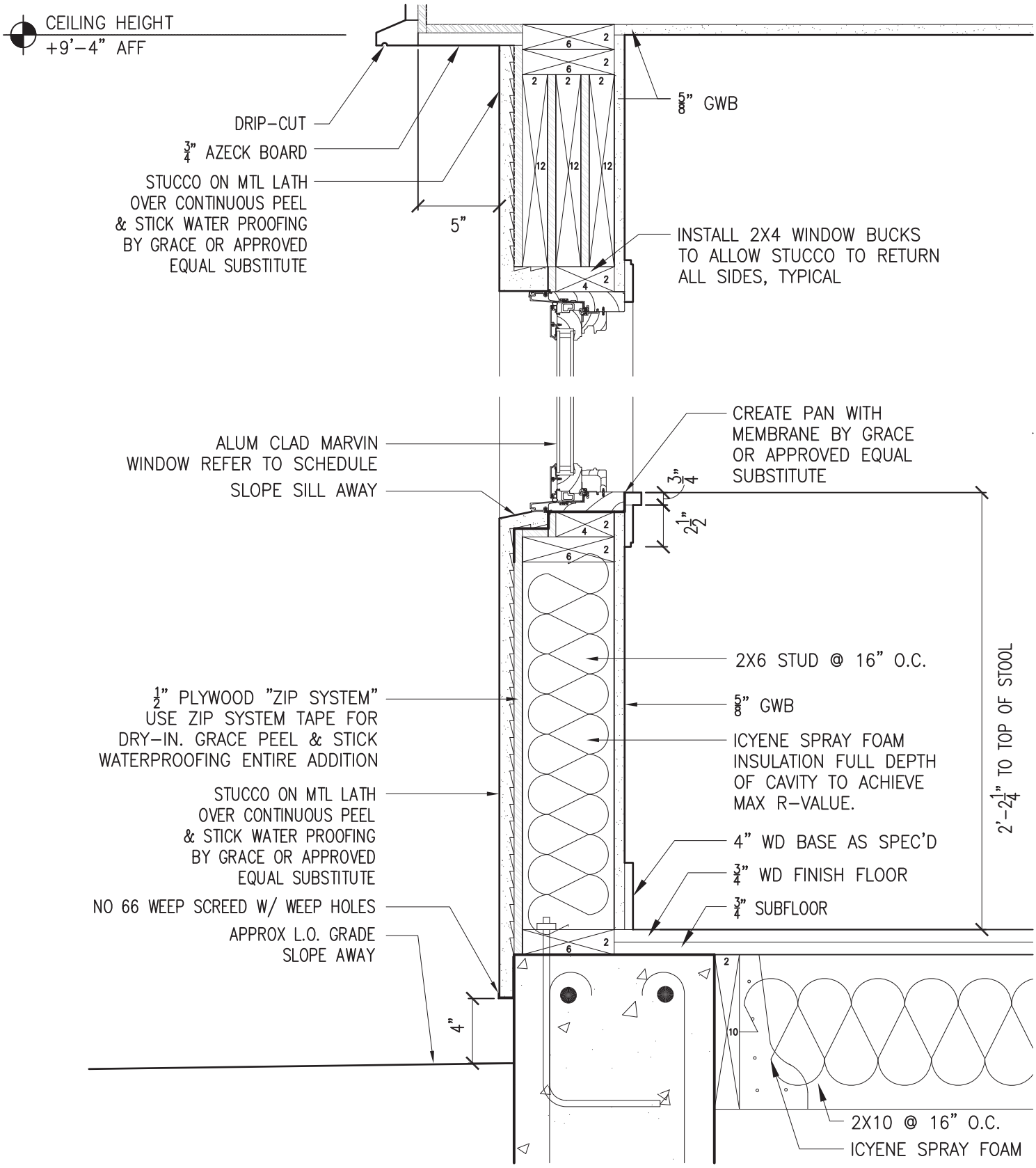

1

SECTION: WINDOW C

SCALE: 1 1/2" = 1'-0"

415 CEDAR	A2.0
DATE: JUNE 14, 2016	
POTEET ARCHITECTS LP	PAGE 1 OF 2

Wood Ultimate Double Hung

Operation and Maintenance

To operate the Wood Ultimate Double Hung window, unlock the sash lock by rotating the sash lock lever horizontally. Once unlocked, push the bottom window sash upwards to the desired position. To close, reverse the procedure.

Periodically clean the vinyl jamb liners where the sash slides. Keep them dirt and grease free by washing with a gentle dish detergent. Wipe jamb carriers dry before use.

How to Tilt the Wood Ultimate Double Hung Sash

NOTE: For instructions on how to safely tilt or remove your Wood Ultimate Double Hung Magnum sash, see your local dealer or distributor.

To tilt the bottom sash, unlock the sash and raise it about 4" (102 mm) up from the sill. With one hand, rotate the tilt lever (nestled in the sash lock base) until it stops and you've heard a click. Use the other hand to grasp the top of the sash and pull it in towards you until the top rail of the sash clears the frame. Release the sash tilt lever and use both hands to lower the sash to a horizontal position.

1. Raise bottom sash about 4" (102 mm). Rotate the tilt lever until you've heard a click.

2. Pull sash towards you until it clears the frame.

3. Grasp the top of the sash and gently lower it into a horizontal position.

To tilt the top sash, lower the sash about halfway and use both hands to simultaneously pull in on the tilt latches located on the top rail of the sash. While holding in on the latches, pull the sash inwards until the top of the sash clears the frame. Release the tilt latches and ease the top of the sash down to a horizontal position.

NOTE: The top sash is not tiltable on a Single Hung window.

How to Remove the Wood Ultimate Double Hung Sash

Tilt the bottom sash as described in the previous section. When the sash is in a horizontal position, lift both sides of the sash upward 2"-3" (51-76 mm) raising pivot pins out of each clutch. Now rotate the sash until pivot pins clear the jambs and remove the bottom sash from the frame.

Next, tilt the top sash using the same technique described in the previous section. When the sash is in a horizontal position, lift both sides upward 2"-3" (51-76 mm) raising pivot pins out of the clutch. Finally rotate the sash until the pivot pins clear the jambs and remove the top sash from the frame.

How to Replace the Wood Ultimate Double Hung Sash

Hold the sash exterior side up with the top rail facing towards you. Rotate and insert the sash so the sash pins clear the frame and place it so the lower sash pin is 2"-4" (51-76 mm) above the clutch. Rotate the sash to the horizontal position and lower it down until the pivot pins are fully seated into the clutches. Simultaneously pull in on both tilt latches and tilt the sash up into place. Release the tilt latches and operate the sash to ensure that the sash is operating smoothly. Replace the bottom sash following the same procedure, except fully engage the tilt lever prior to lifting the bottom sash into place.

Rotate the sash and insert it into the frame.

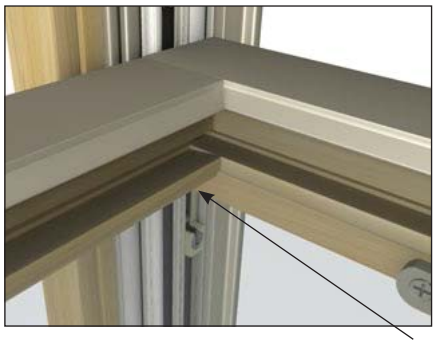

Make sure tilt pins are correctly seated in each clutch before proceeding.

Ultimate Double Hung Magnum

Some significant differences between the Magnum and other Marvin Double Hung windows are higher performance ratings and availability of very large double and single hung windows. Another difference is that when opening the Magnum window it will stop before it reaches the fully open position. Contact your local Marvin dealer for detailed instructions on how to safely tilt and/or remove the sash.