HISTORIC AND DESIGN REVIEW COMMISSION

August 16, 2017

HDRC CASE NO:	**2017-413**
ADDRESS:	8514 MISSION RD
LEGAL DESCRIPTION:	NCB 11175 BLK LOT NW IRR 862.87 FT OF TR 12 (ARB 12C)
ZONING:	R-6 H RIO-6
CITY COUNCIL DIST.:	3
DISTRICT:	Mission Historic District
APPLICANT:	Joe Cannata/RVK
OWNER:	Morris Martin/City of San Antonio
TYPE OF WORK:	Construction of a multi-use trail

REQUEST:

The applicant is requesting a Certificate of Appropriateness for approval to construct a multiuse trail to span approximately 1.25 miles in length. The trail will be constructed of concrete trailhead paving and include boulder seating and signage along portions of the path. The proposal includes kiosk information signs constructed of galvanized steel, stone, and printed panels to closely match the materiality and design of elements existing at the Stinson Airport facility and portions of the Mission Reach River Walk.

APPLICABLE CITATIONS:

Historic Design Guidelines, Chapter 5, Guidelines for Site Elements

1. Topography
A. TOPOGRAPHIC FEATURES
i. *Historic topography*—Avoid significantly altering the topography of a property (i.e., extensive grading). Do not alter character-defining features such as berms or sloped front lawns that help define the character of the public right-of-way. Maintain the established lawn to help prevent erosion. If turf is replaced over time, new plant materials in these areas should be low-growing and suitable for the prevention of erosion.
ii. *New construction*—Match the historic topography of adjacent lots prevalent along the block face for new construction. Do not excavate raised lots to accommodate additional building height or an additional story for new construction.
iii. *New elements*—Minimize changes in topography resulting from new elements, like driveways and walkways, through appropriate siting and design. New site elements should work with, rather than change, character-defining topography when possible.

2. Fences and Walls
A. HISTORIC FENCES AND WALLS
i. *Preserve*—Retain historic fences and walls.
ii. *Repair and replacement*—Replace only deteriorated sections that are beyond repair. Match replacement materials (including mortar) to the color, texture, size, profile, and finish of the original.
iii. *Application of paint and cementitious coatings*—Do not paint historic masonry walls or cover them with stone facing or stucco or other cementitious coatings.
B. NEW FENCES AND WALLS
i. *Design*—New fences and walls should appear similar to those used historically within the district in terms of their scale, transparency, and character. Design of fence should respond to the design and materials of the house or main structure.
ii. *Location*—Avoid installing a fence or wall in a location where one did not historically exist, particularly within the front yard. The appropriateness of a front yard fence or wall is dependent on conditions within a specific historic district. New front yard fences or wall should not be introduced within historic districts that have not historically had them.
iii. *Height*—Limit the height of new fences and walls within the front yard to a maximum of four feet. The appropriateness of a front yard fence is dependent on conditions within a specific historic district. New front yard fences should not be introduced within historic districts that have not historically had them. If a taller fence or wall existed historically, additional height may be considered. The height of a new retaining wall should not exceed the height of the slope it retains.

iv. *Prohibited materials*—Do not use exposed concrete masonry units (CMU), Keystone or similar interlocking retaining wall systems, concrete block, vinyl fencing, or chain link fencing.
v. *Appropriate materials*—Construct new fences or walls of materials similar to fence materials historically used in the district. Select materials that are similar in scale, texture, color, and form as those historically used in the district, and that are compatible with the main structure. Screening incompatible uses—Review alternative fence heights and materials for appropriateness where residential properties are adjacent to commercial or other potentially incompatible uses.
C. PRIVACY FENCES AND WALLS
i. *Relationship to front facade*—Set privacy fences back from the front façade of the building, rather than aligning them with the front façade of the structure to reduce their visual prominence.
ii. *Location* – Do not use privacy fences in front yards.

3. Landscape Design
A. PLANTINGS
i. *Historic Gardens*— Maintain front yard gardens when appropriate within a specific historic district.
ii. *Historic Lawns*—Do not fully remove and replace traditional lawn areas with impervious hardscape. Limit the removal of lawn areas to mulched planting beds or pervious hardscapes in locations where they would historically be found, such as along fences, walkways, or drives. Low-growing plantings should be used in historic lawn areas; invasive or large-scale species should be avoided. Historic lawn areas should never be reduced by more than 50%.
iii. *Native xeric plant materials*—Select native and/or xeric plants that thrive in local conditions and reduce watering usage. See UDC Appendix E: San Antonio Recommended Plant List—All Suited to Xeriscape Planting Methods, for a list of appropriate materials and planting methods. Select plant materials with a similar character, growth habit, and light requirements as those being replaced.
iv. *Plant palettes*—If a varied plant palette is used, incorporate species of taller heights, such informal elements should be restrained to small areas of the front yard or to the rear or side yard so as not to obstruct views of or otherwise distract from the historic structure.
v. *Maintenance*—Maintain existing landscape features. Do not introduce landscape elements that will obscure the historic structure or are located as to retain moisture on walls or foundations (e.g., dense foundation plantings or vines) or as to cause damage.
B. ROCKS OR HARDSCAPE
i. *Impervious surfaces* —Do not introduce large pavers, asphalt, or other impervious surfaces where they were not historically located.
ii. *Pervious and semi-pervious surfaces*—New pervious hardscapes should be limited to areas that are not highly visible, and should not be used as wholesale replacement for plantings. If used, small plantings should be incorporated into the design.
iii. *Rock mulch and gravel* - Do not use rock mulch or gravel as a wholesale replacement for lawn area. If used, plantings should be incorporated into the design.
C. MULCH
Organic mulch – Organic mulch should not be used as a wholesale replacement for plant material. Organic mulch with appropriate plantings should be incorporated in areas where appropriate such as beneath a tree canopy.
i. *Inorganic mulch* – Inorganic mulch should not be used in highly-visible areas and should never be used as a wholesale replacement for plant material. Inorganic mulch with appropriate plantings should be incorporated in areas where appropriate such as along a foundation wall where moisture retention is discouraged.
D. TREES
i. *Preservation*—Preserve and protect from damage existing mature trees and heritage trees. See UDC Section 35-523 (Tree Preservation) for specific requirements.
ii. *New Trees* – Select new trees based on site conditions. Avoid planting new trees in locations that could potentially cause damage to a historic structure or other historic elements. Species selection and planting procedure should be done in accordance with guidance from the City Arborist.
iii. *Maintenance* – Proper pruning encourages healthy growth and can extend the lifespan of trees. Avoid unnecessary or harmful pruning. A certified, licensed arborist is recommended for the pruning of mature trees and heritage trees.

5. Sidewalks, Walkways, Driveways, and Curbing
A. SIDEWALKS AND WALKWAYS
i. *Maintenance*—Repair minor cracking, settling, or jamming along sidewalks to prevent uneven surfaces. Retain and repair historic sidewalk and walkway paving materials—often brick or concrete—in place.

ii. *Replacement materials*—Replace those portions of sidewalks or walkways that are deteriorated beyond repair. Every effort should be made to match existing sidewalk color and material.
iii. *Width and alignment*— Follow the historic alignment, configuration, and width of sidewalks and walkways. Alter the historic width or alignment only where absolutely necessary to accommodate the preservation of a significant tree.
iv. *Stamped concrete*—Preserve stamped street names, business insignias, or other historic elements of sidewalks and walkways when replacement is necessary.
v. *ADA compliance*—Limit removal of historic sidewalk materials to the immediate intersection when ramps are added to address ADA requirements.
B. DRIVEWAYS
i. *Driveway configuration*—Retain and repair in place historic driveway configurations, such as ribbon drives. Incorporate a similar driveway configuration—materials, width, and design—to that historically found on the site. Historic driveways are typically no wider than 10 feet. Pervious paving surfaces may be considered where replacement is necessary to increase stormwater infiltration.
ii. *Curb cuts and ramps*—Maintain the width and configuration of original curb cuts when replacing historic driveways. Avoid introducing new curb cuts where not historically found.
C. CURBING
i. *Historic curbing*—Retain historic curbing wherever possible. Historic curbing in San Antonio is typically constructed of concrete with a curved or angular profile.
ii. *Replacement curbing*—Replace curbing in-kind when deteriorated beyond repair. Where in-kind replacement is not be feasible, use a comparable substitute that duplicates the color, texture, durability, and profile of the original. Retaining walls and curbing should not be added to the sidewalk design unless absolutely necessary.

6. Non-Residential and Mixed Use Streetscapes
A. STREET FURNITURE
i. *Historic street furniture*—Preserve historic site furnishings, including benches, lighting, tree grates, and other features.
ii. *New furniture*—Use street furniture such as benches, trash receptors, tree grates, and tables that are simple in design and are compatible with the style and scale of adjacent buildings and outdoor spaces when historic furnishings do not exist.
B. STREET TREES
i. *Street trees*—Protect and maintain existing street trees. Replace damaged or dead trees with trees of a similar species, size, and growth habit.
C. PAVING
i. *Maintenance and alterations*—Repair stone, masonry, or glass block pavers using in-kind materials whenever possible. Utilize similar materials that are compatible with the original in terms of composition, texture, color, and detail, when in-kind replacement is not possible.
D. LIGHTING
i. *General*—See UDC Section 35-392 for detailed lighting standards (height, shielding, illumination of uses, etc.).
ii. *Maintenance and alterations*—Preserve historic street lights in place and maintain through regular cleaning and repair as needed.
iii. *Pedestrian lighting*—Use appropriately scaled lighting for pedestrian walkways, such as short poles or light posts (bollards).
iv. *Shielding*—Direct light downward and shield light fixtures using cut-off shields to limit light spill onto adjacent properties.
v. *Safety lighting*—Install motion sensors that turn lights on and off automatically when safety or security is a concern. Locate these lighting fixtures as discreetly as possible on historic structures and avoid adding more fixtures than necessary.

8. Americans with Disabilities Act (ADA) Compliance
A. HISTORIC FEATURES
i. *Avoid damage*—Minimize the damage to the historic character and materials of the building and sidewalk while complying with all aspects of accessibility requirements.
ii. *Doors and door openings*—Avoid modifying historic doors or door openings that do not conform to the building and/or accessibility codes, particularly on the front façade. Consider using a discretely located addition as a means of providing accessibility.
B. ENTRANCES
i. *Grade changes*—Incorporate minor changes in grade to modify sidewalk or walkway elevation to provide an accessible

entry when possible.
ii. *Residential entrances*—The preferred location of new ramps is at the side or rear of the building when convenient for the user.
iii. *Non-residential and mixed use entrances*—Provide an accessible entrance located as close to the primary entrance as possible when access to the front door is not feasible.
C. DESIGN
i. *Materials*—Design ramps and lifts to compliment the historic character of the building and be visually unobtrusive as to minimize the visual impact, especially when visible from the public right-of-way.
ii. *Screening*—Screen ramps, lifts, or other elements related to ADA compliance using appropriate landscape materials. Refer to Guidelines for Site Elements for additional guidance.
iii. *Curb cuts*—Install new ADA curb cuts on historic sidewalks to be consistent with the existing sidewalk color and texture while minimizing damage to the historical sidewalk.

Unified Development Code Sec. 35-640. - Public Property and Rights-of-Way.

(a) Public Property. Generally, the historic and design review commission will consider applications for actions affecting the exterior of public properties except in the case of building interiors that are the sites of major public assemblies or public lobbies. The historic and design review commission will also consider applications for actions affecting public properties such as city parks, open spaces, plazas, parking lots, signs and appurtenances.
(b) Public Rights-of-Way. Generally, the historic and design review commission will consider applications for actions affecting public rights-of-way whose construction or reconstruction exceeds in quality of design or materials standards of the design manual of the public works department.

Unified Development Code Sec. 35-646. - Construction in Public Rights-of-Way.

(a) General Provisions. All construction in the public right-of-way shall conform to all city codes. In considering an application, the historic and design review commission shall be guided by the following:
(1) Sidewalk Zones. Pedestrian movement should be pleasant, allowing for store browsing, comfortable transit waiting and easy accessibility for disabled people. Where possible, sidewalks should at least five (5) feet in width. Existing sidewalks should not be narrowed when replaced.

(2) Sidewalk Paving and Surfaces. Materials should complement stylistic differences of individual buildings, particularly when related to historic buildings.

A. Materials. Materials should be chosen for beauty, strength, longevity, easy maintenance and traction when dry or wet.
B. Color and Texture. To ensure the safety of pedestrians, all changes in surfaces should be defined by contrasting color, texture or materials.

(3) Street Features and Arrangements. Historic districts and the downtown, as well as other distinct areas of the city have diverse character and any street furniture selected for these areas should complement these differences. In addition, the clustering of street furniture in one (1) place is recommended. Trash receptacles, seating, telephones and other street furniture should be grouped together.

A. Circulation. A clear path-of-travel of thirty-six (36) inches wide shall be maintained in and around street features and arrangement.
B. Seating. Seating should be physically comfortable and inviting, durable and attractive. Plaza and open space seating should also be socially comfortable by offering a variety of choices such as in the sun or shade, near traffic and activity or not, and alone or in groups.
C. Drinking Fountains. Placing drinking fountains in new development is encouraged. Fountains should be placed within general areas of pedestrian traffic and located on accessible surfaces.
D. Trash Receptacles. Trash receptacles should blend visually with their surroundings and their design and location should make use as convenient as possible.
E. Vending Machines. Vending machines will not dispense items other than newspapers and periodicals. Vending machines shall be clustered together and away from intersection corners.
F. Vending Carts and Kiosks. Vending carts and kiosks are encouraged in locations that do not impede normal pedestrian traffic.

G. Outdoor Dining. Lease of public right-of-way for outdoor dining is encouraged in appropriate locations. Lease of sidewalk space for outdoor dining shall be managed through the department of parks and recreation and shall comply with all city codes. It is recommended that at least eight (8) feet of sidewalk be retained between the curb and the leased or licensed space to provide an uninterrupted public walkway.
H. Street Objects. Utility boxes, vending machines and so on should not be located in sidewalk zones. Their design and color should be compatible with character of their surroundings.

(4) Streetscape Landscaping. Landscaping, particularly streets trees, are an important addition to the streetscape because of the hot Texas climate. Appropriate application along sidewalks strengthens the visual quality of public streets. Careful selection of plant materials, using native and low-water use plants, is recommended.

(Ord. No. 98697 § 6)

Sec. 35-645. - Signs and Billboards on Public Property or Right-of-Way.

(a) General Provisions. All non-regulatory signage on public property, on the public right-of-way, or overhanging the public right-of-way shall conform to all city codes and must be approved by the historic preservation officer prior to installation. Permits must be obtained following approval of the application. The historic preservation officer may submit an application under this section to the historic and design review commission for their recommendation prior to approving, denying, or approving with conditions the application. Memorials, markers, naming rights of public property, and recognition of charitable donations given to the City of San Antonio shall be additionally governed by existing policies for memorials and markers and/or any formal action passed by city council. Temporary displays approved by the department exercising control of the public property are authorized if in accordance with chapter 28 of the City Code of San Antonio, Texas.

(b) Sign Definitions. For signage definitions, refer to subsection 35-612(b) and chapter 28 of the City Code.

(c) Proportion of Signs. Signage width and height must be in proportion to the facade, respecting the size, scale and mass of the facade, building height, and rhythms and sizes of window and door openings. The building facade shall be considered as part of an overall sign program but the sign shall be subordinate to the overall building composition. Additionally, signs should respect and respond to the character and/or period of the area in which they are being placed.

(d) Standards for Sign Design and Placement. In considering whether to recommend approval or disapproval of an application for a certificate to construct or alter signage on a building, object, site, or structure, the historic and design review commission shall be guided by the following standards in addition to any specific design guidelines adopted by city council:
(1) Primary sign design considerations shall be identification and legibility. Size, scale, height, color and location of signs shall be harmonious with, and properly related to, the overall design of the building or structure and the surrounding area.
(2) The number of signs on each building shall be kept to a minimum to prevent unsightly clutter and confusion.
(3) Signs which describe, point, or direct the reader to a specific place or along a specific course, such as "entrance," "exit," and "handicap access" shall be reviewed.
(4) All graphic elements shall reinforce the architectural integrity of any building. Signs should not disfigure, damage, mar, alter, or conceal architectural features or details and should be limited to sizes which are in scale with the architecture and the streetscape. The historic and design review commission shall be guided by the building's proportion and scale when such elements are incorporated.
(5) Additionally, when reviewing applications for signage the historic preservation officer and the historic and design review commission shall consider the visual impact on nearby historic resources and established neighborhood character.

(f) Prohibited Signs. Signs that shall not be permitted include:
(1) Any sign placed upon a building, object, site, or structure in any manner so as to disfigure, damage, interrupt, or conceal any window opening, door, or significant architectural feature or detail of any building;
(2) Roof mounted signs, except in the cases of (i) integral design with the building; (ii) a contributing sign; (iii) or otherwise allowed in this article;
(3) Digital and/or LED lighted signs, not to include LED light sources that do not meet the definition of a sign, with or without rotating, flashing lettering, icons or images. Except as provided below:
A. A public transportation agency may incorporate transit information signage into transit shelters, utilizing LED or

digital technology, provided the signage is contained within or under the transit shelter, and is limited to five (5) square feet of signage area, and one (1) sign per thirty (30) linear feet of pedestrian shelter.
B. A public transportation agency may incorporate transit information signage into a monument sign at transit stops, utilizing LED or digital technology, provided it is limited to five (5) square feet of signage area.
C. A public transportation agency may incorporate transit information signage into a monument sign at transit facilities (other than transit stops), utilizing LED or digital technology, provided it is limited to seven (7) square feet of signage area.
D. The historic preservation officer may impose additional restrictions on illumination to ensure that the character of signs are harmonious with the character of the structures on which they are to be placed and any designated landmarks or districts in the area, provided that such restrictions are reasonably related to other conforming signs and conforming structures in the area, do not unreasonably restrict the amount of signage allowed by this section, and are in keeping with the intent of this section. Among other things, consideration shall be given to the location and illumination of the sign in relation to the surrounding buildings, the use of appropriate materials, the size and style of lettering and graphics, and the type of lighting proposed. Notwithstanding the above, applicants may not exceed illumination restrictions contained in chapter 28.

FINDINGS:

a. The property located at 8514 Mission Road is adjacent to the Stinson Municipal Airport facility. The property is also located within the Mission Historic District. The applicant has proposed to construct a multiuse public trail to span approximately 1.25 miles in length. The trail will be constructed of concrete trailhead paving and include boulder seating and signage along portions of the path. The proposal includes kiosk information signs constructed of galvanized steel, stone, and printed panels to closely match the materiality and design of elements existing at the Stinson Airport facility and portions of the Mission Reach River Walk.
b. TRAIL PAVING – The proposed trail will be constructed of concrete trailhead paving. The paving will change color and texture at points in the trail where multiple pathways meet or kiosk signage is introduced. According to the UDC, walkway or paving materials should be chosen for beauty, strength, longevity, easy maintenance and traction when dry or wet. Changes in surfaces should be defined by contrasting color, texture or materials to ensure pedestrian safety. The material is also compatible for its proposed use. Staff finds the proposed trail material appropriate.
c. TRAIL SEATING – The applicant has proposed to provide various boulders and rocks for seating along the proposed trail. According to the UDC, seating should be physically comfortable and inviting, durable and attractive. Plaza and open space seating should also be socially comfortable by offering a variety of choices such as in the sun or shade, near traffic and activity or not, and alone or in groups. The trail will be covered by tree canopies. Staff finds the proposal acceptable.
I. TRAIL TRASH RECEPTICLES –According to the UDC, receptacles should blend visually with their surroundings and their design and location should make use as convenient as possible. The proposed receptacle designs are conveniently located at trail focal points and compatible with both the proposed built and existing natural environment. Staff finds the placement and design appropriate.
d. KIOSK SIGNAGE – The applicant has proposed to install kiosk signage near the entrance of the trail behind the Stinston Airport facility. The kiosk sign will be a height of 9’-8”, including a 2’-10” stone work base. The proposal also includes a weathervane measuring approximately 2 feet in height. According to the UDC, primary sign design considerations shall be identification and legibility. Size, scale, height, color and location of signs shall be harmonious with, and properly related to, the overall design of the building or structure and the surrounding area. The proposed sign design is legible and will feature graphics closer to eye level. The tallest portion of the sign will contain the text “Stinson Hike and Bike Trail” to be readable from a distance. Staff finds the proposed signage appropriate in regards to location, size, and design.
e. WAYFINDING SIGNAGE – The applicant has proposed to install wayfinding signs throughout the trail that are to be non-illuminated, be constructed of aluminum panels, and feature an overall height of either approximately 4 feet or 5.5 feet in height. Both signs will be an overall width of 2’-6”. Staff finds these proposed signs appropriate.
f. ARCHAEOLOGY- The development project shall comply with all federal, state, and local laws, rules, and regulations regarding archaeology.

RECOMMENDATION:

Staff recommends approval based on findings a through f with the following stipulation:

i. ARCHAEOLOGY- The development project shall comply with all federal, state, and local laws, rules, and regulations regarding archaeology.

CASE MANAGER:

Stephanie Phillips

N

Flex Viewer

Powered by ArcGIS Server

Printed:Aug 11, 2017

The City of San Antonio does not guarantee the accuracy, adequacy, completeness or usefulness of any information. The City does not warrant the completeness, timeliness, or positional, thematic, and attribute accuracy of the GIS data. The GIS data, cartographic products, and associated applications are not legal representations of the depicted data. Information shown on these maps is derived from public records that are constantly undergoing revision. Under no circumstances should GIS-derived products be used for final design purposes. The City provides this information on an "as is" basis without warranty of any kind, express or implied, including but not limited to warranties of merchantability or fitness for a particular purpose, and assumes no responsibility for anyone's use of the information.

CITY of SAN ANTONIO
NOTICE of HEARING
REQUEST:
HEARING DATE:
Time: 3:00 PM
(210) 207-0035

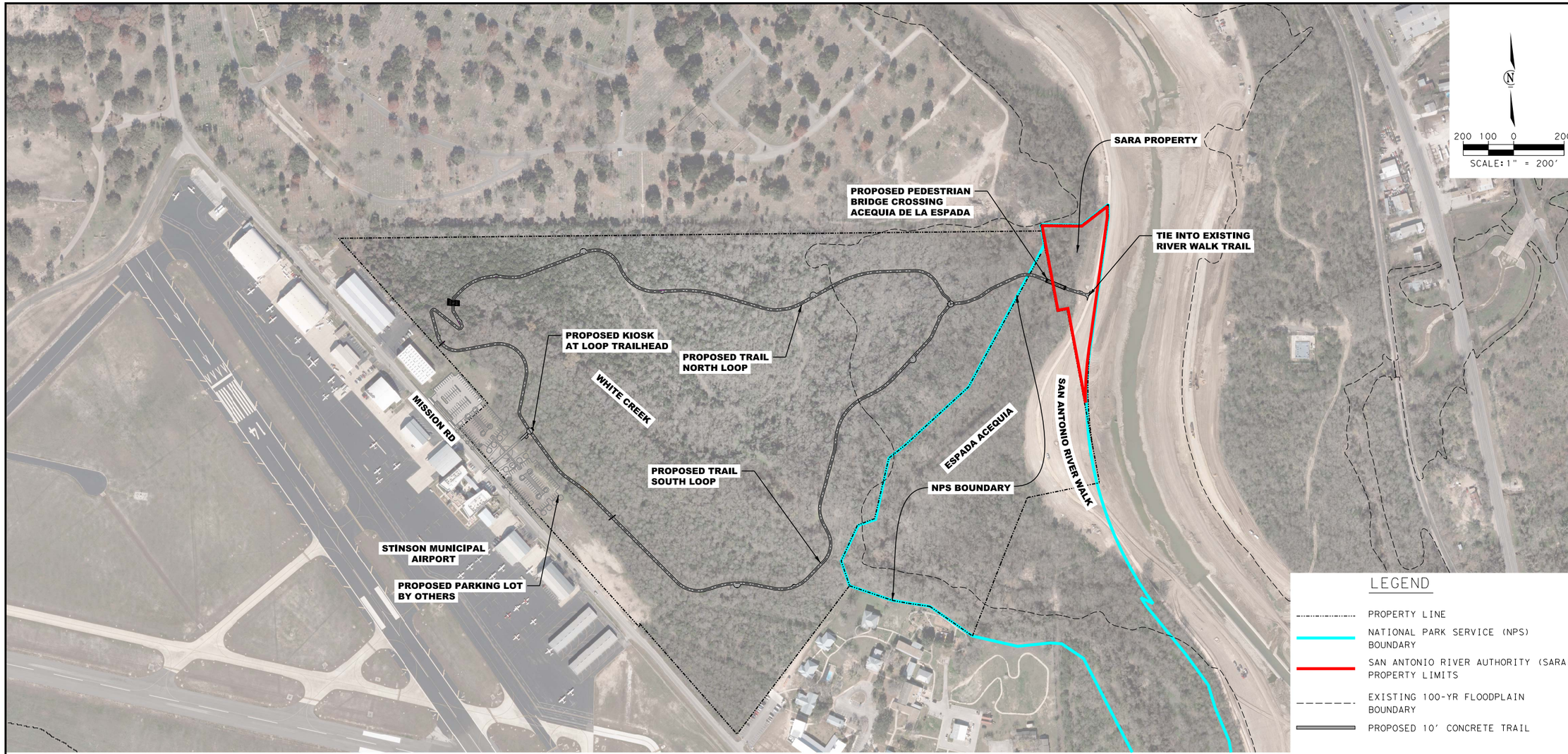

GENERAL NOTES

1. THE PROJECT SHALL BE CONSTRUCTED IN ACCORDANCE WITH THE CONTRACT PLANS AND SPECIFICATIONS. THE PROJECT IS SUBJECT TO REVIEW BY REPRESENTATIVES OF THE CITY OF SAN ANTONIO, AVIATION DEPARTMENT. THE PROGRAM MANAGER/CONSTRUCTION MANAGER (PM/CM), THE ENGINEER, SAN ANTONIO RIVER AUTHORITY (SARA), NATIONAL PARK SERVICES (NPS), TRANSPORTATION & CAPITAL IMPROVEMENTS. THE CONTRACTOR SHALL PROVIDE UNRESTRICTED ACCESS TO THE SITE FOR INSPECTION PURPOSES DURING THE ENTIRE CONSTRUCTION PERIOD.
2. ALL CONTRACTOR PERSONNEL AGENTS, SUBCONTRACTORS, SUPPLIERS, VEHICLES, EQUIPMENT AND MATERIALS SHALL REMAIN WITHIN THE LIMITS OF THE PROJECT AND WITHIN THE SITE ACCESS.
3. THE CONTRACTOR SHALL COORDINATE HIS/HER CONSTRUCTION WITH THE CM PRIOR TO COMMENCING WORK.
4. THE AIR OPERATIONS AREA (AOA) IS DEFINED AS PAVED AND UNPAVED AREAS OF THE AIRPORT INSIDE THE PERIMETER SECURITY FENCE AND INCLUDES BUT IS NOT LIMITED TO APRONS, TAXIWAYS. RUNWAYS AND RUNWAY/TAXIWAY SAFETY AREAS. NO WORK TO BE PERFORMED WITHIN AOA FOR THIS PROJECT; CONTRACTOR TO REMAIN OUTSIDE OF AOA.
5. CONTRACTOR SHALL OBTAIN ALL DEVELOPMENT AND CONSTRUCTION PERMITS REQUIRED AT THE CONTRACTOR'S EXPENSE.
6. THE PROJECT PAY ITEMS ARE APPROVED TO BE INCLUSIVE OF ALL WORK TO BE PERFORMED AS SHOWN IN THESE PLANS. ALL WORK NOT IDENTIFIED WITH A SPECIFIC PAY ITEM IS TO BE CONSIDERED REQUIRED/INCIDENTAL WORK TO COMPLETE THE PROJECT AND IS TO BE INCLUDED IN THE COST OF THE PROJECT PAY ITEMS PROVIDED.
7. THE CONTRACTOR SHALL HAVE SUFFICIENT EQUIPMENT AND PERSONNEL ON SITE TO ACCOMPLISH EFFICIENT AND PROMPT CONSTRUCTION OF THE VARIOUS WORK ITEMS, INCLUDING WORK ON MORE THAN ONE WORK ITEM SIMULTANEOUSLY.
8. THE CONTRACTOR SHALL NOTIFY ALL UTILITY COMPANIES AND LOCATE ALL SERVICES A MINIMUM OF 48 HOURS PRIOR TO BEGINNING ANY WORK IN THE AREA. IN THE EVENT OF DAMAGE TO UNDERGROUND UTILITIES, AIRPORT OR FAA POWER AND/OR COMMUNICATION LINES, WHETHER SHOWN ON THE DRAWINGS OR NOT, THE CONTRACTOR SHALL MAKE AND EXPEDITE REPAIRS TO REPLACE THE UTILITY LINE BACK IN FULL SERVICE AT NO INCREASE IN COST TO THE PROJECT. EXISTING UNDERGROUND UTILITIES ARE SHOWN FROM AVAILABLE UTILITY RECORDS AND OBSERVABLE SURFACE FEATURES. ACTUAL LOCATIONS MAY VARY AND UTILITIES NOT SHOWN ON THESE PLANS MAY EXIST. CONTRACTOR SHALL COORDINATE WITH LOCAL UTILITY COMPANIES AND AIRPORT MAINTENANCE PERSONNEL FOR ASSISTANCE IN LOCATING ALL UNDERGROUND FACILITIES IN THE PROJECT AREA PRIOR TO CONSTRUCTION.
9. EACH CONSTRUCTION AREA SHALL BE SHAPED TO ALLOW SURFACE RUNOFF OR GROUND WATER TO FLOW AWAY FROM THE PROJECT SITE DURING EACH WORK OPERATION. IF NECESSARY, SURFACE OR GROUNDWATER SHALL BE PUMPED IMMEDIATELY FROM EACH CONSTRUCTION AREA IN COMPLIANCE WITH THE EPA OR TCEQ REGULATIONS. THE COST OF DEWATERING SHALL BE SUBSIDIARY TO THE CONSTRUCTION
10. CONTRACTOR SHALL BE RESPONSIBLE FOR LOCATING AND ACQUIRING AN ACCEPTABLE WATER SOURCE, PORT-O-POTTY AND POWER AS NECESSARY FOR CONSTRUCTION.
11. THE CONTRACTOR SHALL PROVIDE AND MAINTAIN ALL HORIZONTAL AND VERTICAL CONSTRUCTION STAKING AS REQUIRED FOR THE PROJECT DEVELOPMENT.
12. THE CONTRACTOR SHALL BE RESPONSIBLE FOR PROVIDING HIS/HER OWN PROJECT OFFICE AND COMPLETE UTILITY SERVICES. THE AIRPORT WILL NOT PROVIDE FACILITIES AND SERVICES TO THE CONTRACTOR DURING CONSTRUCTION. THE CONTRACTOR'S PERSONNEL ARE PROHIBITED FROM UTILIZING THE AIRPORT TERMINALS OR ANY TENANT FACILITIES.

UTILITY SERVICE	CONTACT	PHONE NUMBER
SAN ANTONIO WATER SYSTEM	UTILITY LOCATE	210-233-2010
CPS ENERGY (CITY OF SAN ANTONIO PROJECTS)	JOHN OFFER	210-353-2012
CPS ENERGY (PROJECTS OTHER THAN CITY PROJECTS)	RICHARD RODRIGUEZ	210-353-2226
ATT	SANTIAGO PRINECE (LONG DISTANCE)	210-471-0022
	THOMAS HARPER (LOCAL)	210-283-1990
TIME WARNER	STEPHEN ROBERTSON	210-342-4306
MCI/VERIZON	JERRY REEVES	214-674-0555
VIA	ERNEST SWEET	210-362-4816
TXDOT	CURTIS RABENALDT (SIGNALS)	210-207-7765
	BRAD ADAMI (TRANSGUIDE)	210-731-5109
COSA TRAFFIC	ADRIAN OLGUIN	210-207-7769

GONZALEZ DE LA GARZA
SURVEYORS ENGINEERS CONTRACTORS

115 E. TRAVIS ST. SUITE 800
SAN ANTONIO, TX 78205
p:210.208.9400 f:210.208.9401
TBPE FIRM NO. 10015
TBPLS NO. 10193922
WWW.GD-US.COM

STINSON MUNICIPAL AIRPORT SAN ANTONIO, TEXAS

STINSON HIKE AND BIKE TRAIL

PRELIMINARY DESIGN

INCOMPLETE DOCUMENT ISSUED FOR INTERIM REVIEW ONLY

NOT RELEASED FOR REGULATORY APPROVAL, PERMIT OR CONSTRUCTION
AYDA S. GONZALEZ
TEXAS REGISTRATION NO. 96594
JANUARY 2017

REVISIONS

DATE ISSUED: FEBRUARY 22, 2017
REVIEWED BY: AG
DRAWN BY: EV
DESIGNED BY: AR

SHEET TITLE

SITE LAYOUT & GENERAL NOTES

SHEET NUMBER

C004

STINSON HIKE AND BIKE TRAIL

HOWARD W. PEAK GREENWAY TRAILS SYSTEM PLAN

CITY OF SAN ANTONIO

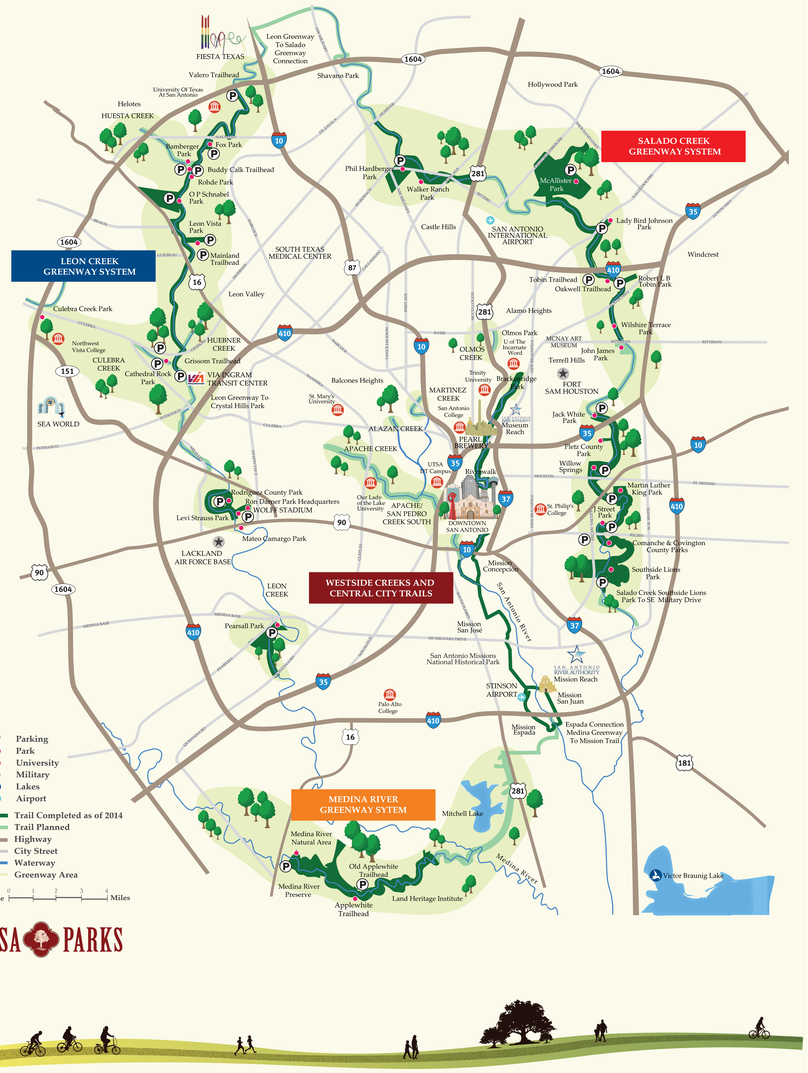

PARKS & RECREATION
SAN ANTONIO

PARK REGULATIONS

PARK HOURS

- Creekway Park Curfew: 5 am to 11 pm, Daily (City of San Antonio - Sect. 22-28e)

PROHIBITED ACTIVITIES

- Smoking unless in designated area (Sect. 22-25.1)
- Littering (Sect. 29-3)
- Glass beverage containers (Sect. 22-3)
- Entrance into a naturally vegetated area not designated for public access (Sect.22-26.1)
- Swimming or wadding (Sect. 22-88)
- Air guns, paint ball guns, weapons (Sect. 21-14b)
- Motorized vehicles off roadways or off designated parking areas (Sect. 22-4.1)
- Horseback riding (Sect. 22-26.1)
- Collection of firewood (Sect. 22-25.1)
- Operation of water craft without permit (Except toy models) (Sect. 22-90,91)
- Excavation or removal of artifacts of any kind (Texas Natural Resources Code, Title 9, Chapter 191)

FLOOD WARNING:
TRAILWAYS ARE SUBJECT TO FLASH FLOOD HAZARDS. SEEK HIGH GROUND AT NEAREST TRAILHEAD OR TRAIL EXIT.

ADVERTENCIA DE INUNDACIÓN:
SENDEROS SON SUJETOS A RIESGO DE INUNDACIÓN. BUSQUE TERRENO ELEVADO EN LA ENTRADA DEL SENDERO MAS PRÓXIMO O EN LAS SALIDA DEL SENDERO.

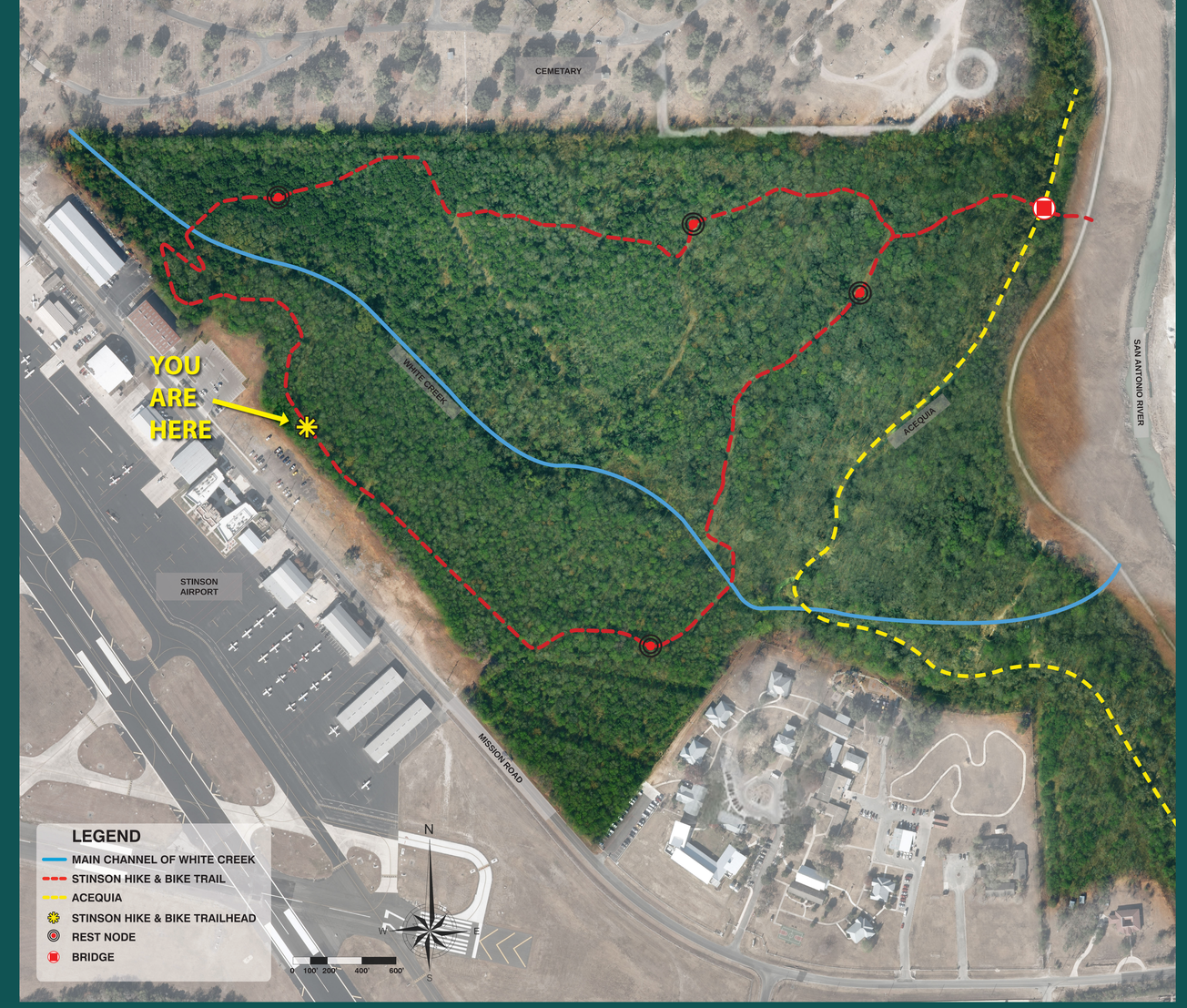

SITE PLAN AND GRAPHIC SIGN PANEL

HOWARD W. PEAK GREENWAY TRAILS SYSTEM

STINSON
HIKE AND BIKE TRAIL

ACEQUIA
(X.XX MILES)

MISSION REACH
RIVERWALK
(X.XX MILES)

STINSON
AIRPORT
RESTAURANT
(X.XX MILES)

HOWARD W. PEAK GREENWAY TRAILS SYSTEM

STINSON
HIKE AND BIKE TRAIL

PARK REGULATIONS

TRAIL HOURS:
- Greenway hours: Sunrise to Sunset, Daily (City of San Antonio Code - Sect. 22-28e)
- For maintenance or repairs, Call 311
- Please report illegal dumping to (210) 207-SAPD
- For Law Enforcement or Medical Emergencies, Call 311

PROHIBITED ACTIVITIES:
- Smoking unless in designated areas (Sect. 22-25.1)
- Littering (Sect. 29-3)
- Alcoholic beverages (Sect. 22-1)
- Glass beverage containers (Sect. 22-3)
- Entrance into a naturally vegetated area not designated for public access (Sect. 22-26.1)
- Swimming or wading (Sect. 22-88)
- Motorized vehicles off roadways or designated parking areas (Sect. 22-4.1)
- Collection of firewood (Sect. 22-25.1)
- Operation of watercraft without permit (except toy models) (Sect. 22-90,91)
- Excavation or removal of artifacts of any kind (Texas Natural Reasource Code, Title 9, Chapter 191)

READY TO HIT THE TRAIL?
- Be sure to carry enough water.
- Wear enough sunscreen, insect repellent, a hat and sturdy shoes.
- The park is home to many wild animals, insects and snakes. Never approach a wild animal.
- Please stay on designated trail. Poison ivy is abundant.
- Take only pictures, leave only footprints.
- Enjoy the trail!

CAUTION:
- This area is subject to rapid flooding during heavy rainfall. DO NOT ENTER TRAIL AREAS DURING PROLONGED OR HEAVY RAIN EVENTS.
- Esta area se inunda rapidamente durante lluvias pesadas. NO ENTRE EN LAS AREAS DEL SENDERO DURANTE LLUVIAS PROLONGADAS O PESADAS

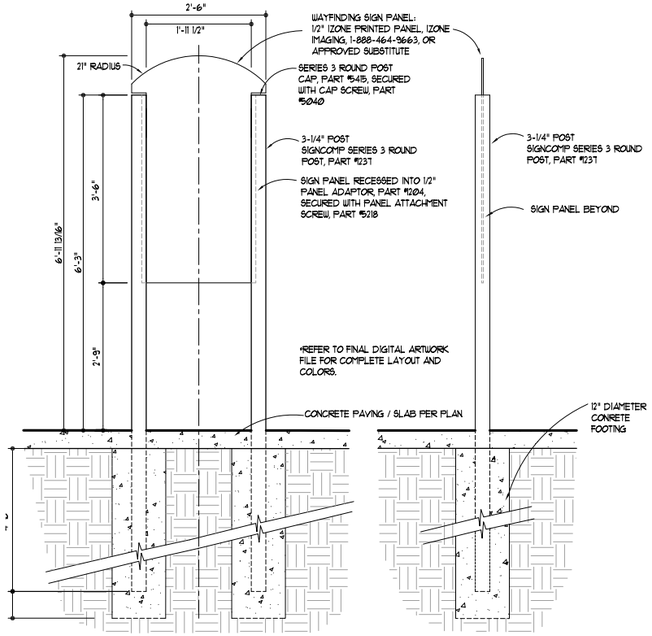

FRONT ELEVATION

SIDE ELEVATION

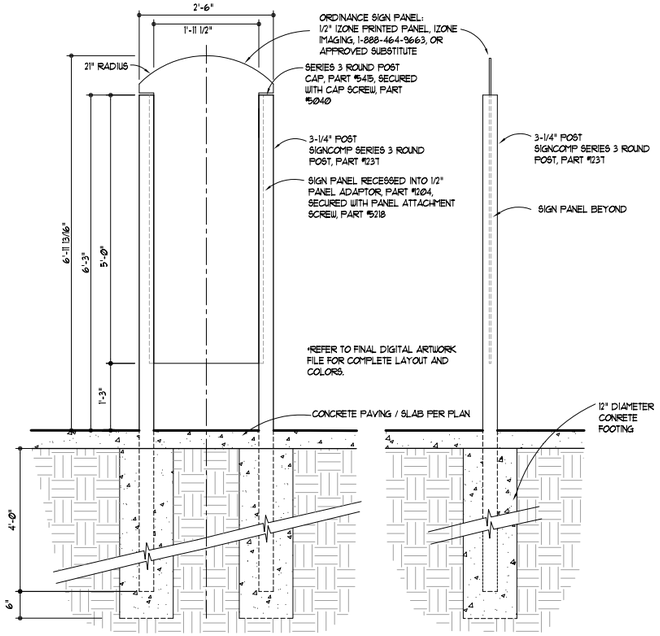

FRONT ELEVATION

SIDE ELEVATION

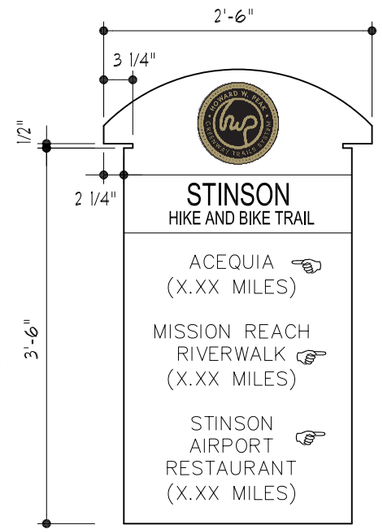

WAYFINDING SIGN PANEL

*FINAL SIGN INFORMATION TO BE APPROVED AND INCLUDED ON FINAL DIGITAL ARTWORK FILE

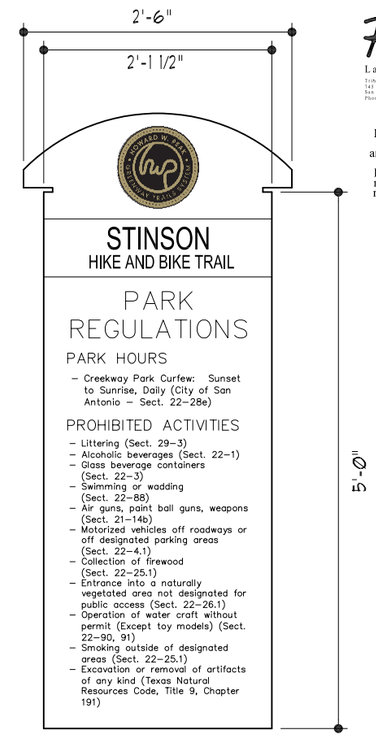

ORDINANCE SIGN PANEL

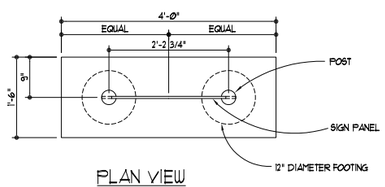

PLAN VIEW

1 L2.01 **WAYFINDING SIGN**
3/4" = 1'-0"

2 L2.01 **ORDINANCE SIGN**
3/4" = 1'-0"

SPECIAL SIGN NOTES:

CONTACT LANDSCAPE ARCHITECT FOR DIGITAL FILES OF FINAL SIGN ARTWORK DESIGN. ALL SIGNS, UNLESS OTHERWISE NOTED, SHALL BE PRINTED AND CUT TO SHAPE BY MANUFACTURER.

APPLY ANTI-GRAFFITI COATING TO ALL PRINTED GRAPHIC SIGN PANELS.

PLAN VIEW

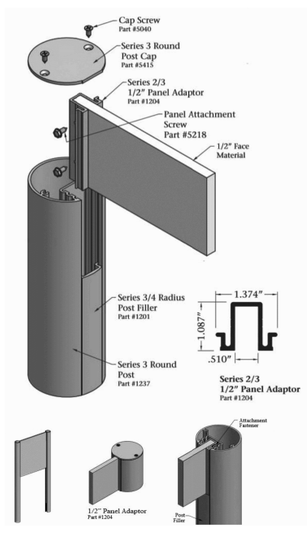

2 L2.01 **3D SIGN ASSEMBLY GRAPHIC**
SCALE: N/A 3D IMAGES PROVIDED BY SIGNCOMP

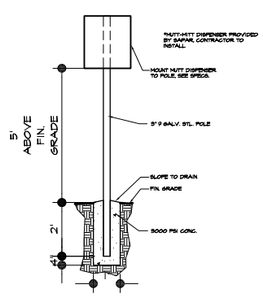

3 L2.01 **MUTT-MITT DISPENSER**
3/8" = 1'-0"

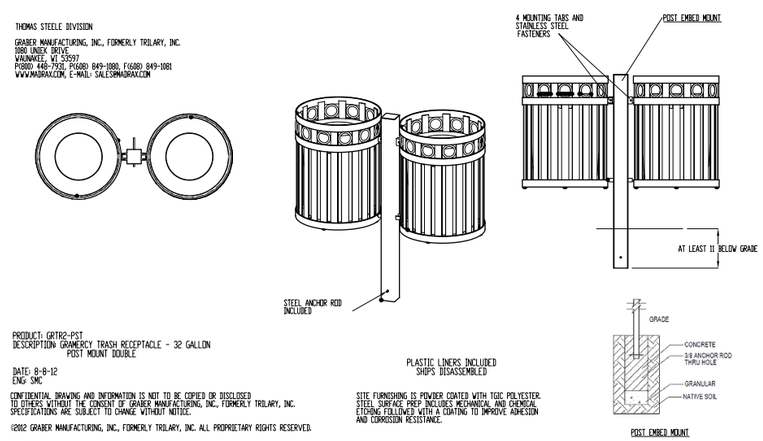

4 L201 **TRASH RECEPTACLE & RECYCLING**
NTS

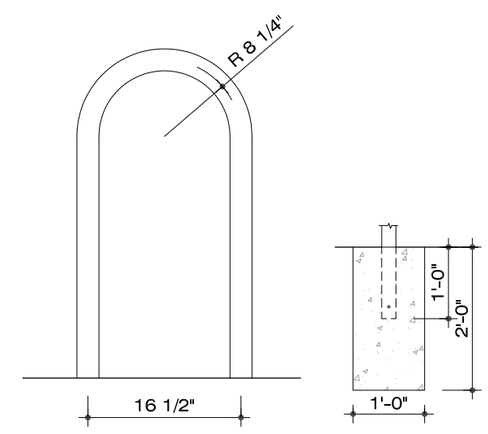

FRONT VIEW

SIDE VIEW

REFER TO SPECIFICATIONS FOR MANUFACTURER INFORMATION

5 L201 **BICYCLE RACK**
1/2" = 1'-0"

RVK
Landscape Architects
Trinity Plaza II, Sixth Floor
745 East Mulberry
San Antonio, Texas 78212
Phone 210.733.7434 Fax 210.733.3549

PRELIMINARY
This Design Document indicates the design concept and the general scope of the project. It is incomplete and may not be used for regulatory approval, permit, or construction.

GONZALEZ DE LA GARZA
SURVEYORS ENGINEERS CONTRACTORS

115 E. TRAVIS ST. SUITE 800
SAN ANTONIO, TX 78205
p:210.208.9400 f:210.208.9401
TBPE FIRM NO. 10015
TBPLS NO. 10193922
WWW.GD-US.COM

STINSON MUNICIPAL AIRPORT SAN ANTONIO, TEXAS

STINSON HIKE AND BIKE TRAIL DESIGN

PRELIMINARY DESIGN

INCOMPLETE DOCUMENT ISSUED FOR INTERIM REVIEW ONLY

NOT RELEASED FOR REGULATORY APPROVAL, PERMIT OR CONSTRUCTION
Licenced Landscape Architect
Joseph S. Cannata
2626

REVISIONS

DATE ISSUED: February 22, 2016
REVIEWED BY: JC
DRAWN BY: JC
DESIGNED BY: JC

90% CONSTRUCTION REVIEW

CONSTRUCTION DETAILS

SHEET NUMBER
L201

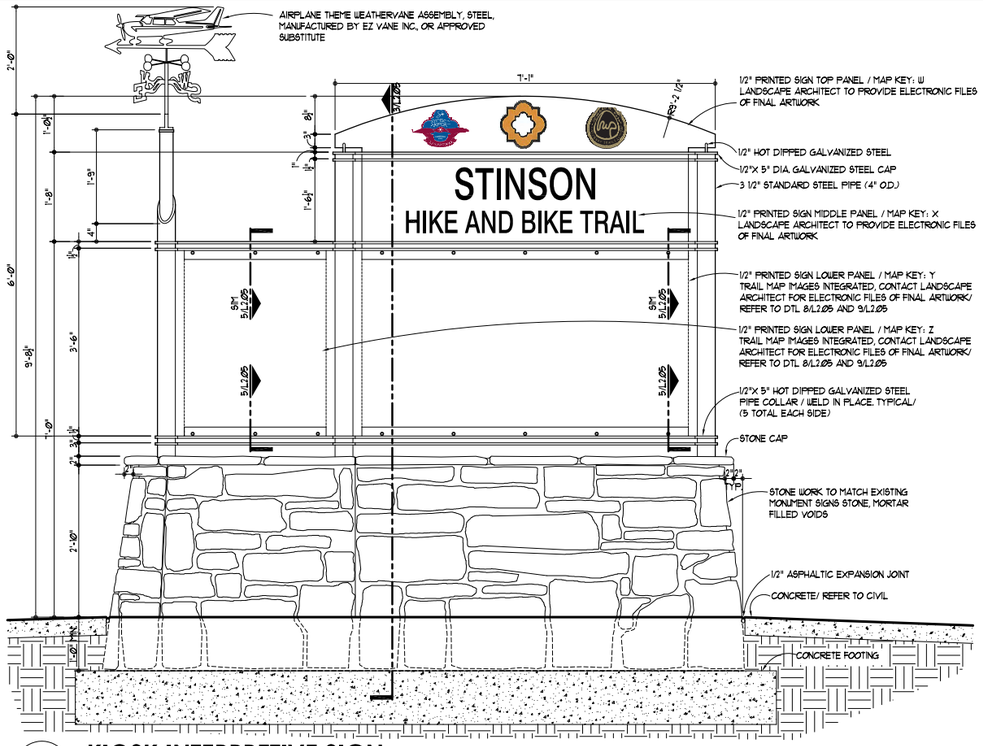

1 L2.05 **KIOSK INTERPRETIVE SIGN**
3/4" = 1'-0" FRONT ELEVATION

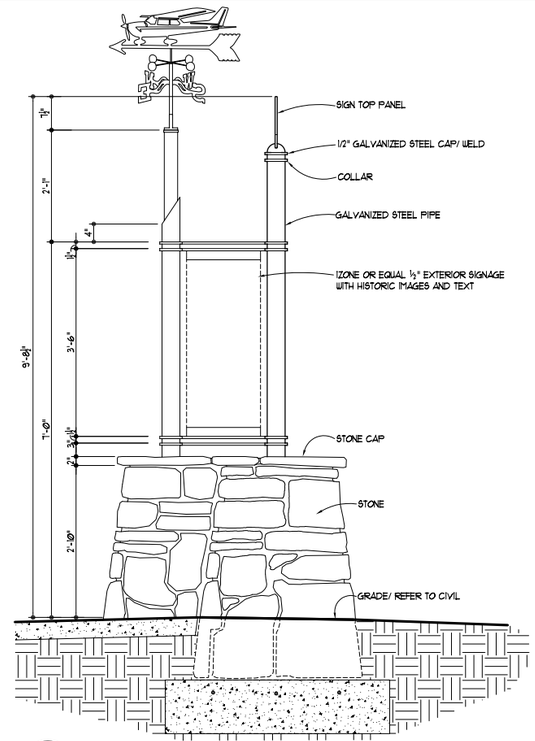

2 L2.05 **KIOSK INTERPRETIVE SIGN**
3/4" = 1'-0" SIDE ELEVATION

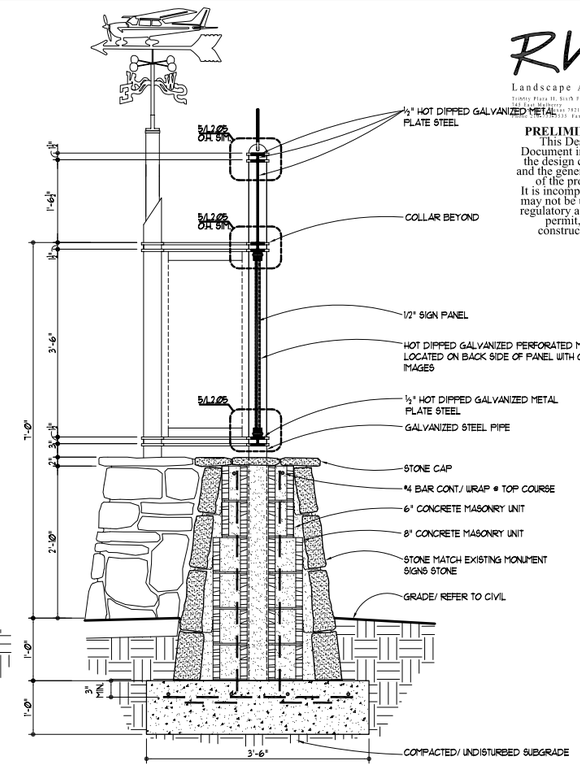

3 L2.05 **KIOSK INTERPRETIVE SIGN**
3/4" = 1'-0" SIDE ELEVATION

RVK
Landscape Architects
Trinity Plaza II, 10 th Floor
745 E. Mulberry
San Antonio, Texas 78212
Phone: 210.736.5151 Fax 210.736.5549

PRELIMINARY
This Design Document indicates the design concept and the general scope of the project. It is incomplete and may not be used for regulatory approval, permit, or construction.

NOTE: SHOP DRAWINGS
CONTRACTOR SUBMITTED SHOP DRAWINGS FOR ALL KIOSKS AND MONUMENT SIGN CONSTRUCTION MUST BE SUBMITTED TO AND APPROVED BY LANDSCAPE ARCHITECT PRIOR TO PROCEEDING WITH CONSTRUCTION OF THESE FEATURES.

NOTE:
ALL SIGN PANELS TO BE PRODUCED BY IZONE IMAGING, INC., 1-888-464-9663, OR APPROVED SUBSTITUTE. SEE SPECIFICATIONS MANUAL FOR PRODUCT SUBSTITUTION PROCEDURES.

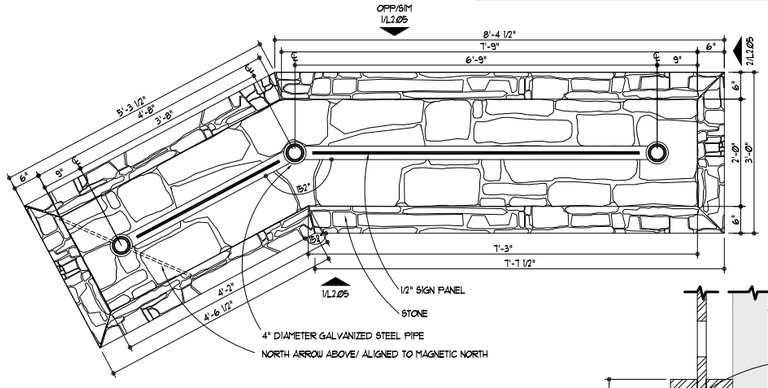

4 L2.05 **KIOSK INTERPRETIVE SIGN**
3/4" = 1'-0" PLAN VIEW

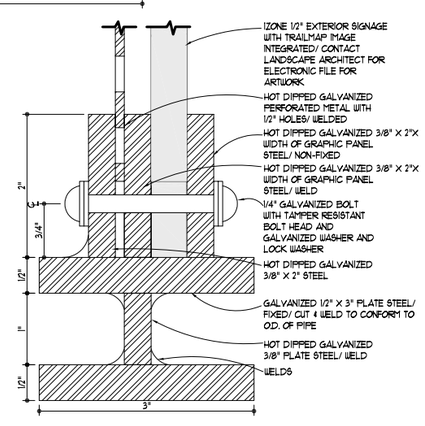

5 L2.05 **KIOSK DETAIL**
1"= 1'-0" SECTION

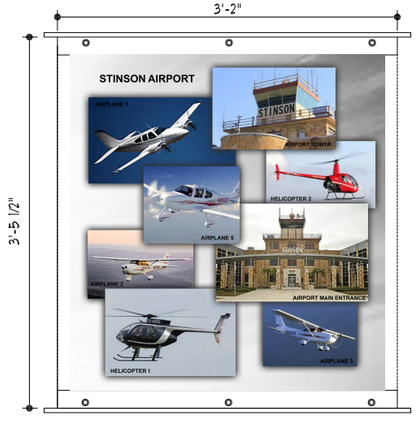

8 L2.05 **KIOSK GRAPHICS**
NTS CITY GREENWAYS MAP CONCEPT

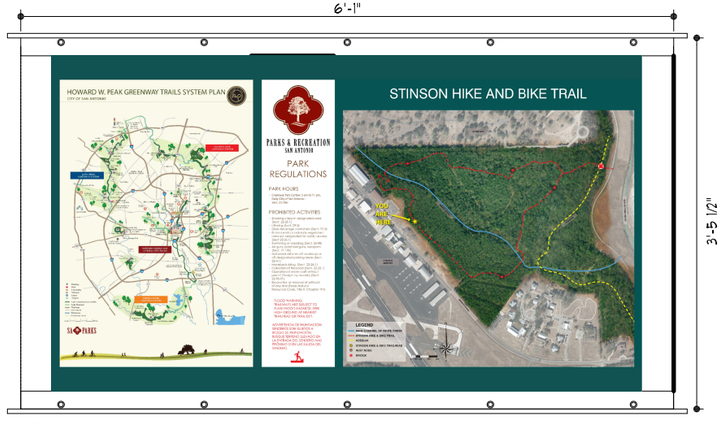

9 L2.05 **KIOSK GRAPHICS**
NTS PARK MAP CONCEPT

GONZALEZ DE LA GARZA
SURVEYORS ENGINEERS CONTRACTORS

115 E. TRAVIS ST. SUITE 800
SAN ANTONIO, TX 78205
p:210.208.9400 f:210.208.9401
TBPE FIRM NO. 10015
TBPLS NO. 10193922
WWW.GD-US.COM

STINSON MUNICIPAL AIRPORT SAN ANTONIO, TEXAS

STINSON HIKE AND BIKE TRAIL DESIGN

PRELIMINARY DESIGN

INCOMPLETE DOCUMENT ISSUED FOR INTERIM REVIEW ONLY

NOT RELEASED FOR REGULATORY APPROVAL, PERMIT OR CONSTRUCTION
Licenced
Landscape Architect
Joseph S. Cannata
2626

REVISIONS

DATE ISSUED: February 22, 2016
REVIEWED BY: JC
DRAWN BY: JC
DESIGNED BY: JC

90% CONSTRUCTION REVIEW

TRAILHEAD KIOSK DETAILS

SHEET NUMBER
L202

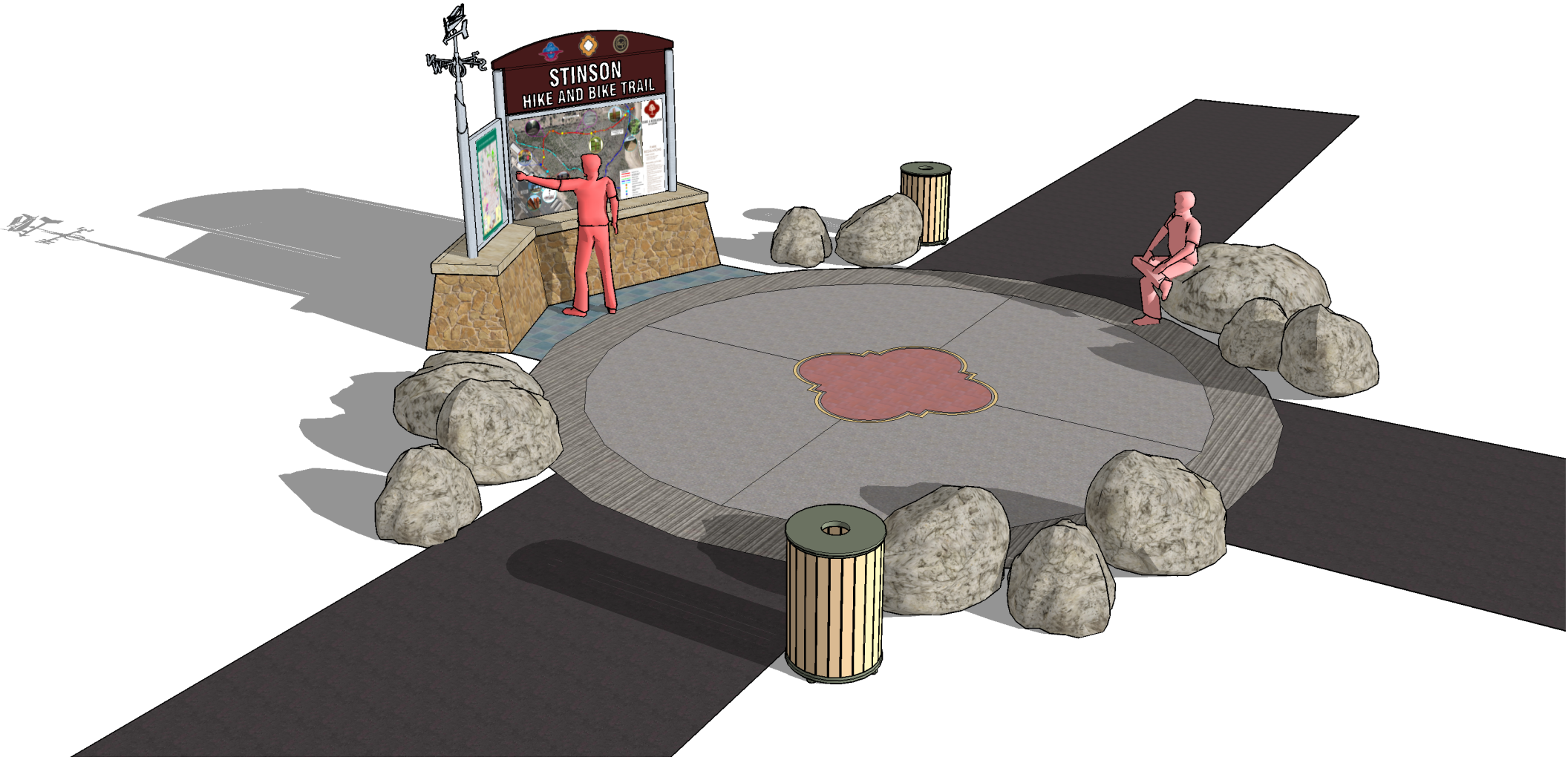

SIGN KIOSK AT PAVED TRAILHEAD

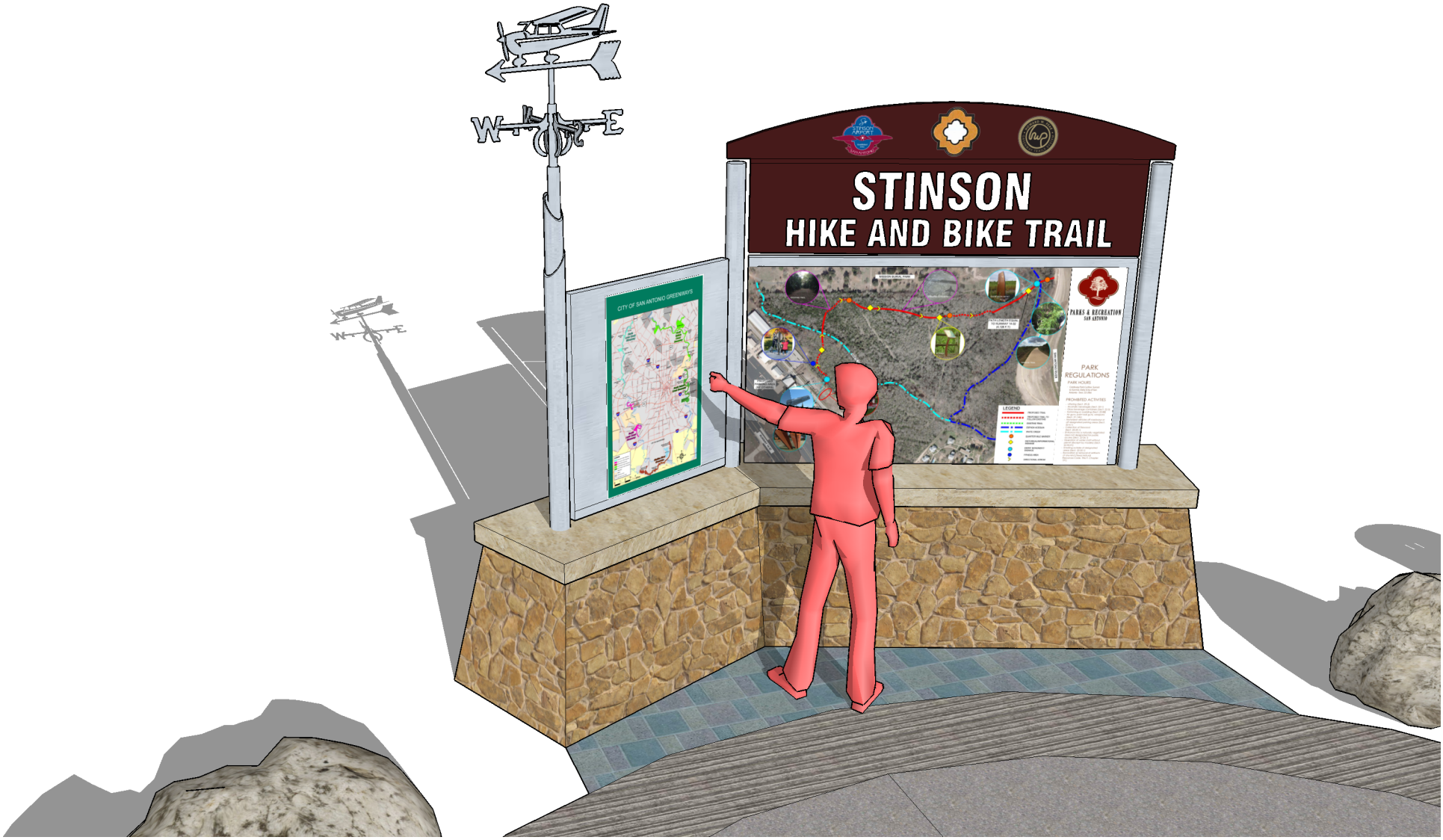
STINSON
HIKE AND BIKE TRAIL
CITY OF SAN ANTONIO GREENWAYS
PARKS & RECREATION
SAN ANTONIO
PARK REGULATIONS
PARK HOURS
PROHIBITED ACTIVITIES
LEGEND

SIGN KIOSK

FRONT OF HISTORIC TERMINAL BUILDING

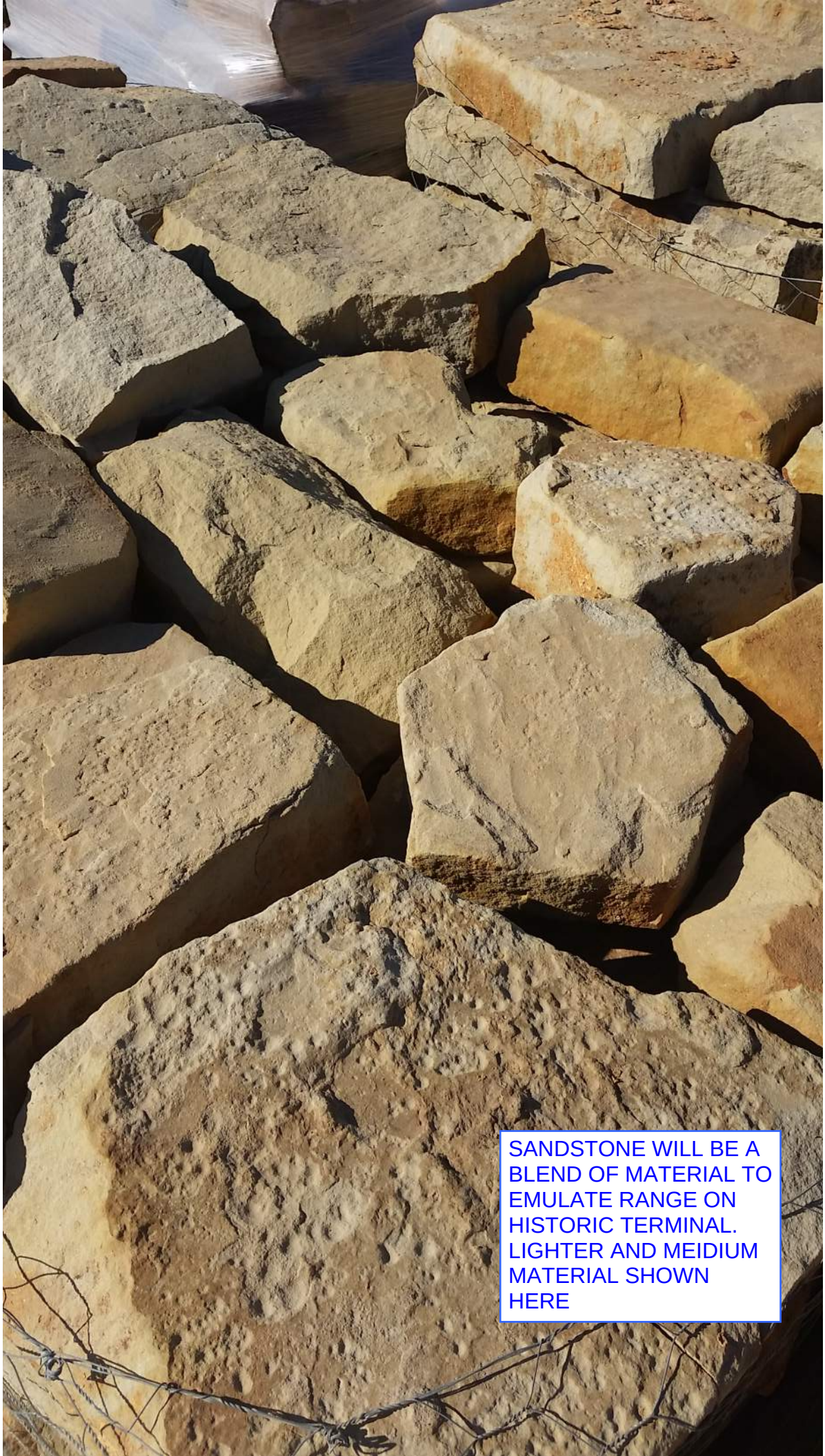
SANDSTONE WILL BE A BLEND OF MATERIAL TO EMULATE RANGE ON HISTORIC TERMINAL. LIGHTER AND MEIDIUM MATERIAL SHOWN HERE