PLAT NO. 160424

REPLAT
ESTABLISHING

NORTHWOOD PARK (IDZ)

BEING A 2.127 ACRE TRACT, INCLUSIVE OF A 0.035 ROW DEDICATION TO THE CITY OF SAN ANTONIO OUT OF BLOCK 40, N.C.B. 10440 AS DESCRIBED IN VOLUME 17474, PAGE 2459, OFFICIAL PUBLIC RECORDS OF REAL PROPERTY, BEXAR COUNTY, TEXAS. AND ESTABLISHING LOTS 3–12, BLOCK 40, N.C.B. 10440, SAN ANTONIO, BEXAR COUNTY, TEXAS.

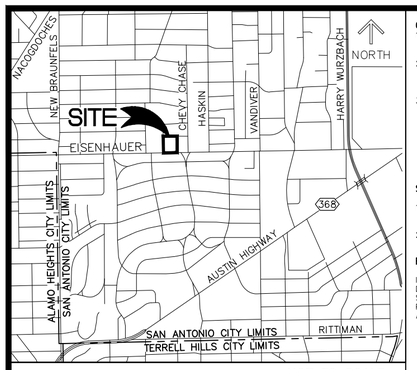

LOCATION MAP NOT TO SCALE

GENERAL NOTES:

1. RESIDENTIAL FINISHED FLOOR ELEVATIONS MUST BE A MINIMUM OF EIGHT INCHES ABOVE FINAL ADJACENT GRADE. 35–504 (e)(5)
2. 28' IRREVOCABLE INGRESS/EGRESS AND PUBLIC WATER EASEMENT AND PRIVATE ACCESS AND PRIVATE SEWER EASEMENT TO BE OWNED AND MAINTAINED BY THE HOME OWNERS ASSOCIATION (H.O.A.) FOR THE SOLE USE OF LOTS 3 – 12.
3. NO STRUCTURES, FENCES, WALLS OR OTHER OBSTRUCTIONS SHALL BE PLACED WITHIN THE LIMITS OF THE 28' IRREVOCABLE INGRESS/EGRESS AND PUBLIC WATER EASEMENT AND PRIVATE ACCESS AND PRIVATE SEWER EASEMENT.

SURVEYOR'S NOTE:

1. BEARING SHOWN HEREON ARE BASED ON THE TEXAS COORDINATE SYSTEM OF 1983, SOUTH CENTRAL ZONE, NAD 83.
2. 1/2 IRON RODS AT ALL CORNERS UNLESS OTHERWISE NOTED.

FIRE ACCESS NOTE:

INGRESS AND EGRESS SHALL BE PROVIDED BETWEEN ALL ADJACENT LOTS FOR ADEQUATE FIRE DEPARTMENT VEHICLE ACCESS PER THE CITY OF SAN ANTONIO FIRE CODE. THE CROSS ACCESS SHALL NOT BE BLOCKED NOR MAY THIS NOTE BE TAKEN OFF THE PLAT WITHOUT WRITTEN PERMISSION FROM THE CITY OF SAN ANTONIO DIRECTOR OF DEVELOPMENT SERVICES AND THE SAN ANTONIO FIRE DEPARTMENT FIRE MARSHAL.

SAWS NOTES:
IMPACT FEE NOTE:

WATER AND/OR WASTEWATER IMPACT FEES WERE NOT PAID AT THE TIME OF PLATTING FOR THIS PLAT. ALL IMPACT FEES MUST BE PAID PRIOR TO WATER METER SET AND/OR WASTEWATER SERVICE CONNECTION.

FIRE FLOW NOTE:

IN AN EFFORT TO MEET THE CITY OF SAN ANTONIO'S FIRE FLOW REQUIREMENTS FOR THE PROPOSED RESIDENTIAL DEVELOPMENT, THE PUBLIC WATER MAIN SYSTEM HAS BEEN DESIGNED FOR A MINIMUM FIRE FLOW DEMAND OF 1,000 GPM AT 25 PSI RESIDUAL PRESSURE. THE FIRE FLOW REQUIREMENTS FOR INDIVIDUAL STRUCTURES WILL BE REVIEWED DURING THE BUILDING PERMIT PROCESS IN ACCORDANCE WITH THE PROCEDURES SET FORTH BY THE CITY OF SAN ANTONIO DIRECTOR OF DEVELOPMENT SERVICES AND THE SAN ANTONIO FIRE DEPARTMENT FIRE MARSHALL.

WASTEWATER EDU NOTE:

THE NUMBER OF WASTEWATER EQUIVALENT DWELLING UNITS (EDU'S) PAID FOR THIS SUBDIVISION PLAT ARE KEPT ON FILE AT THE SAN ANTONIO WATER SYSTEM UNDER THE PLAT NUMBER ISSUED BY DEVELOPMENT SERVICES DEPARTMENT.

DEDICATION OF THE SANITARY SEWER AND WATER MAINS NOTE:

THE DEVELOPER DEDICATES THE SANITARY SEWER MAINS AND WATER MAINS TO THE SAN ANTONIO WATER SYSTEM UPON COMPLETION BY THE DEVELOPER AND ACCEPTANCE BY THE SAN ANTONIO WATERS SYSTEM.

INGREESS/EGRESS NOTE:

NO STRUCTURE, FENCES, WALLS, OR OTHER OBSTRUCTIONS SHALL BE PLACED WITHIN THE LIMITS OF THE INGRESS/EGRESS EASEMENT SHOWN ON THIS PLAT.

CPS NOTES:

1. THE CITY OF SAN ANTONIO AS PART OF IT'S ELECTRIC, GAS, SYSTEMS – CITY PUBLIC SERVICE ENERGY IS HEREBY DEDICATED EASEMENTS AND RIGHT–OF–WAY FOR ELECTRIC DISTRIBUTION AND SERVICE FACILITIES IN THE AREAS DESIGNATED ON THIS PLAT AS "ELECTRIC EASEMENT", "ANCHOR EASEMENT", "SERVICE EASEMENT", "OVERHANG EASEMENT", "UTILITY EASEMENT", "GAS EASEMENT", "TRANSFORMER EASEMENT" FOR THE PURPOSE OF INSTALLING, CONSTRUCTING, RECONSTRUCTING, MAINTAINING, REMOVING, INSPECTING, PATROLLING AND ERECTING POLES, HANGING OR BURYING WIRES, CABLES, CONDUITS, PIPELINES OR TRANSFORMERS, EACH WITH IT'S NECESSARY APPURTENANCES TOGETHER WITH THE RIGHT OF INGRESS AND EGRESS OVER GRANTOR'S ADJACENT LAND, THE RIGHT TO RELOCATE SAID FACILITIES WITHIN SAID EASEMENT AND RIGHT–OF–WAY AREAS, AND THE RIGHT TO REMOVE FROM SAID LAND ALL TREES OR PARTS THEREOF, OR OTHER OBSTRUCTIONS WHICH ENDANGER OR MAY INTERFERE WITH THE EFFICIENCY OF SAID LINES OR APPURTENANCES THERETO. IT IS AGREED AND UNDERSTOOD THAT NO BUILDINGS, CONCRETE SLABS, OR WALLS WILL BE PLACED WITHIN SAID EASEMENT AREAS.
2. ANY CPS ENERGY MONETARY LOSS RESULTING FROM MODIFICATIONS REQUIRED OF CPS ENERGY EQUIPMENT, LOCATED WITHIN SAID EASEMENT, DUE TO GRADE CHANGES OR GROUND ELEVATION ALTERATIONS SHALL BE CHARGED TO THE PERSON OR PERSONS DEEMED RESPONSIBLE FOR SAID GRADE CHANGES OR GROUND ELEVATION ALTERATIONS.
3. THIS PLAT DOES NOT AMEND, ALTER, RELEASE OR OTHERWISE AFFECT ANY EXISTING ELECTRIC, GAS, WATER, SEWER, DRAINAGE, TELEPHONE, CABLE EASEMENTS OR ANY OTHER EASEMENTS FOR UTILITIES UNLESS THE CHANGES TO SUCH EASEMENTS ARE DESCRIBED HEREON.
4. CONCRETE DRIVEWAY APPROACHES ARE ALLOWED WITHIN THE FIVE (5) FOOT WIDE ELECTRIC AND GAS EASEMENTS WHEN LOTS ARE SERVED ONLY BY REAR LOT UNDERGROUND ELECTRIC AND GAS FACILITIES.
5. ROOF OVERHANGS ARE ALLOWED WITHIN THE FIVE (5) FOOT WIDE ELECTRIC AND GAS EASEMENTS WHEN ONLY UNDERGROUND ELECTRIC AND GAS FACILITIES ARE PROPOSED OR EXISTING WITHIN THOSE FIVE (5) FOOT WIDE EASEMENTS.

CURVE TABLE

CURVE	LENGTH	RADIUS	DELTA	CHORD BEARING	CHORD LENGTH	TANGENT
C1	23.86'	24.50'	55°48'10"	N28°03'31"W	22.93'	12.97'
C2	223.94'	44.00'	291°36'20"	S89°50'34"W	49.46'	29.90'
C3	23.86'	24.50'	55°48'10"	S27°44'39"W	22.93'	12.97'

LEGEND:

—800—	EXISTING CONTOUR	RPR	OFFICIAL PUBLIC RECORDS OF REAL PROPERTY
820	PROPOSED CONTOUR	ROW	RIGHT OF WAY
EGTTVE	ELECTRIC, GAS, TELEPHONE, & CABLE TELEVISION EASEMENT	VOL	VOLUME
SAN SEW	SANITARY SEWER	PG	PAGE
R	RADIUS		FND PIN UNLESS OTHERWISE NOTED
℄	CENTERLINE		SET 1/2" IRON ROD WITH RED PLASTIC CAP MARKED "RPLS 4540"
ESM'T.	EASEMENT	9,100	LOT SQUARE FOOT
DPR	DEED AND PLAT RECORDS	×	RADIUS POINT

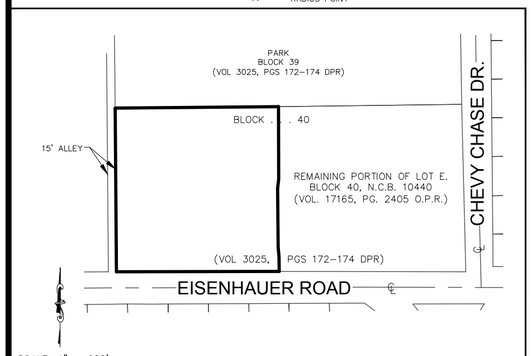

SCALE: 1" = 200'

AREA BEING REPLATTED THROUGH A PUBLIC HEARING

THE AREA BEING REPLATTED WAS PREVIOUSLY PLATTED AS A PORTION OF BLOCK 40, NEW CITY BLOCK 10440, NORTHRIDGE PARK SUBDIVISION, CITY OF SAN ANTONIO, BEXAR COUNTY, TEXAS ACCORDING TO PLAT RECORDED IN VOLUME 3025, PAGES 172–174, DEED AND PLAT RECORDS OF BEXAR COUNTY, TEXAS.

STATE OF TEXAS §
COUNTY OF BEXAR §

THE AREA BEING REPLATTED WAS PREVIOUSLY PLATTED ON PLAT NORTHRIDGE PARK WHICH IS RECORDED IN VOLUME 3025, PAGES 172–174, BEXAR COUNTY PLAT AND DEED RECORDS.

I (WE), THE OWNER(S) OF THE PROPERTY SHOWN ON THIS REPLAT HEREBY CERTIFY THAT THIS REPLAT DOES NOT AMEND OR REMOVE ANY COVENANTS OR RESTRICTIONS.

OWNER

OWNER'S DULY AUTHORIZED AGENT

SWORN AND SUBSCRIBED BEFORE ME THIS THE _____ DAY OF _____, _____.

NOTARY PUBLIC IN AND FOR THE STATE OF TEXAS

MY COMMISSION EXPIRES: _____

STATE OF TEXAS §
COUNTY OF BEXAR §

I HEREBY CERTIFY THAT THE ABOVE PLAT CONFORMS TO THE MINIMUM STANDARDS SET FORTH BY THE TEXAS BOARD OF PROFESSIONAL LAND SURVEYING ACCORDING TO AN ACTUAL SURVEY MADE ON THE GROUND BY:

REGISTERED PROFESSIONAL LAND SURVEYOR

STATE OF TEXAS §
COUNTY OF BEXAR §

I HEREBY CERTIFY THAT PROPER ENGINEERING CONSIDERATION HAS BEEN GIVEN THIS PLAT TO THE MATTERS OF STREETS, LOTS, AND DRAINAGE LAYOUT. TO THE BEST OF MY KNOWLEDGE. THIS PLAT CONFORMS TO ALL REQUIREMENTS OF THE UNIFIED DEVELOPMENT CODE, EXCEPT FOR THOSE VARIANCES GRANTED BY THE SAN ANTONIO PLANNING COMMISSION

LICENSED PROFESSIONAL ENGINEER

STATE OF TEXAS
REGISTERED
JERRY D. WILKIE JR.
4724
PROFESSIONAL LAND SURVEYOR

STATE OF TEXAS
KENNETH ROTHE
61459
REGISTERED PROFESSIONAL ENGINEER

CDS Muery F-1733

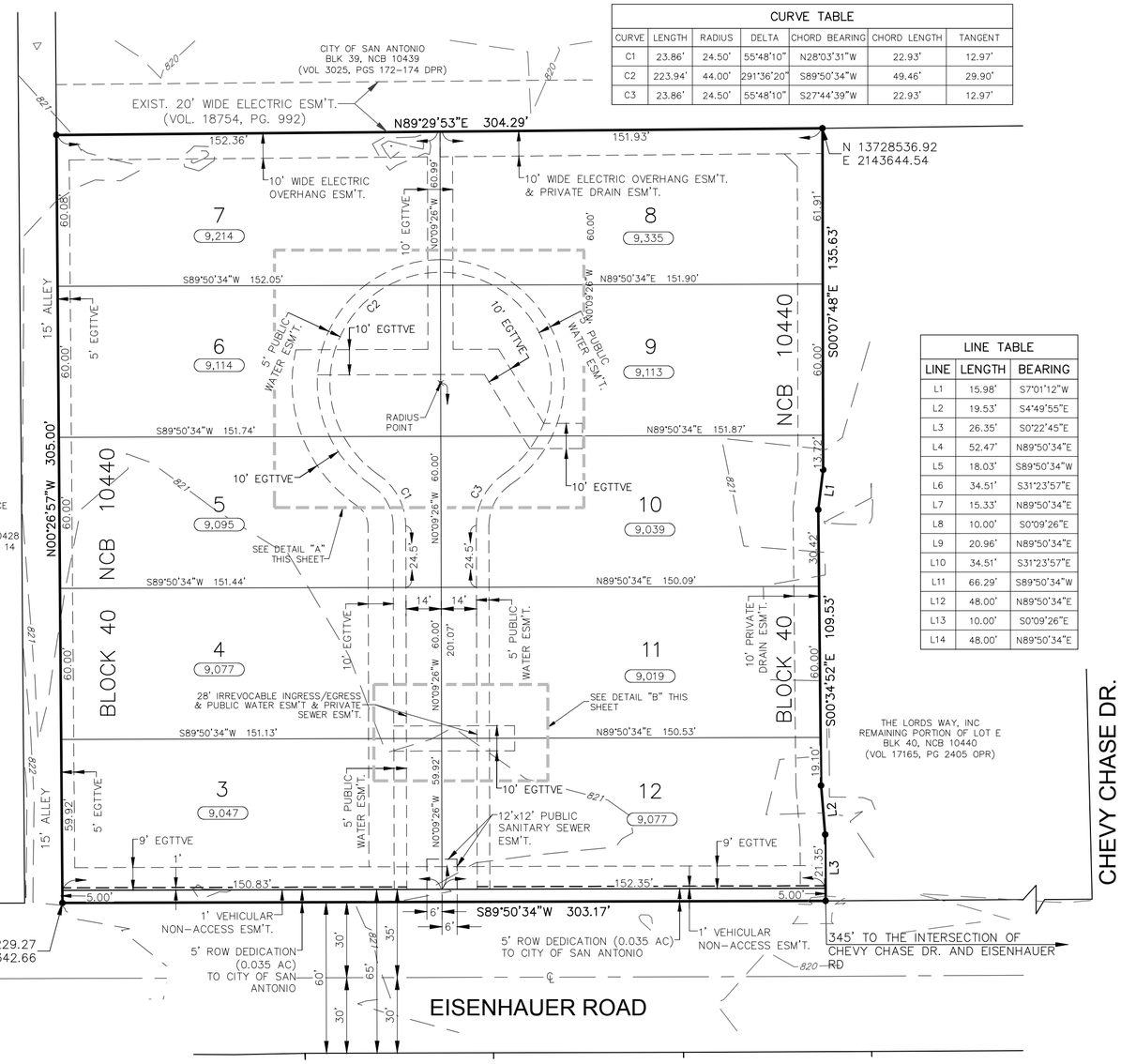

LINE TABLE

LINE	LENGTH	BEARING
L1	15.98'	S7°01'12"W
L2	19.53'	S4°49'55"E
L3	26.35'	S0°22'45"E
L4	52.47'	N89°50'34"E
L5	18.03'	S89°50'34"W
L6	34.51'	S31°23'57"E
L7	15.33'	N89°50'34"E
L8	10.00'	S0°09'26"E
L9	20.96'	N89°50'34"E
L10	34.51'	S31°23'57"E
L11	66.29'	S89°50'34"W
L12	48.00'	N89°50'34"E
L13	10.00'	S0°09'26"E
L14	48.00'	N89°50'34"E

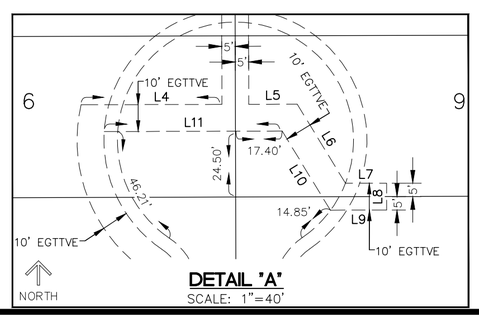

DETAIL "A"
SCALE: 1"=40'

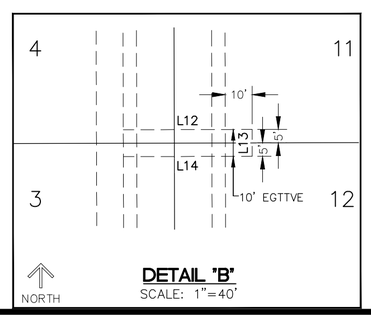

DETAIL "B"
SCALE: 1"=40'

0 40 80
SCALE: 1"=40'

CDS muery
ENGINEERS • SURVEYORS
3411 MAGIC DRIVE SAN ANTONIO TEXAS•(210)581-1111•TBPE NO F-1733•TBPLS NO 100495-00

JOB NO. 117162.00

ATWELL
866.850.4200 www.atwell-group.com
10100 REUNION PLACE, SUITE 700
SAN ANTONIO, TX 78216
210.536.6750

DRAINAGE EASEMENT NOTES:
NO STRUCTURE, FENCES, WALLS OR OTHER OBSTRUCTIONS THAT IMPEDE DRAINAGE SHALL BE PLACED WITHIN THE LIMITS OF THE DRAINAGE EASEMENTS SHOWN ON THIS PLAT. NO LANDSCAPING OR OTHER TYPE OF MODIFICATIONS WHICH ALTER THE CROSS–SECTIONS OF THE DRAINAGE EASEMENT, AS APPROVED, SHALL BE ALLOWED WITHOUT THE APPROVAL OF THE DIRECTOR OF TCI/DIRECTOR OF PUBLIC WORKS. THE CITY OF SAN ANTONIO AND BEXAR COUNTY SHALL HAVE THE RIGHT TO INGRESS AND EGRESS OVER THE GRANTOR'S ADJACENT PROPERTY TO REMOVE ANY IMPEDING OBSTRUCTIONS PLACED WITHIN THE LIMITS OF SAID DRAINAGE EASEMENTS AND TO MAKE ANY MODIFICATIONS OR IMPROVEMENTS WITHIN SAID DRAINAGE EASEMENTS.

MAINTENANCE NOTE:
THE MAINTENANCE OF DRAINAGE EASEMENTS, GREENBELTS, AND OPEN PERMEABLE SPACES SHOWN HEREON SHALL BE THE RESPONSIBILITY OF THE PROPERTY OWNER OR HOMEOWNERS ASSOCIATION AND THEIR SUCCESSORS OR ASSIGNEES AND NOT THE RESPONSIBILITY OF THE CITY OF SAN ANTONIO OR BEXAR COUNTY.

RESIDENTIAL FINISHED FLOOR ELEVATIONS MUST BE A MINIMUM OF EIGHT INCHES ABOVE FINISHED ADJACENT GRADE.

STATE OF TEXAS §
COUNTY OF BEXAR §

THE OWNER OF LAND SHOWN ON THIS PLAT, IN PERSON OR THROUGH A DULY AUTHORIZED AGENT, DEDICATES TO THE USE OF THE PUBLIC EXCEPT AREAS IDENTIFIED AS PRIVATE OR PART OF AN ENCLAVE OR PLANNED UNIT DEVELOPMENT, FOREVER ALL STREETS, ALLEYS, PARKS, WATER COURSES, DRAINS, EASEMENTS AND PUBLIC PLACES THEREON SHOWN FOR THE PURPOSE AND CONSIDERATION THEREIN EXPRESSED.

OWNER/DEVELOPER:K/T TX HOLDINGS, LLC
3425 HIGHWAY 6, SUITE 110
SUGARLAND, TEXAS 77478

CHARLIE TURNER, OWNER

STATE OF TEXAS §
COUNTY OF BEXAR §

BEFORE ME, THE UNDERSIGNED AUTHORITY ON THIS DAY PERSONALLY APPEARED CHARLIE TURNER KNOWN TO ME TO BE THE PERSON WHOSE NAME IS SUBSCRIBED TO THE FOREGOING INSTRUMENT, AND ACKNOWLEDGED TO ME THAT HE EXECUTED THE SAME FOR THE PURPOSES AND CONSIDERATIONS THEREIN EXPRESSED AND IN THE CAPACITY THEREIN STATED.

GIVEN UNDER MY HAND & SEAL OF OFFICE THIS _____ DAY OF_____, 2016

NOTARY PUBLIC
BEXAR COUNTY, TEXAS

THIS PLAT OF NORTHWOOD PARK (IDZ) HAS BEEN SUBMITTED TO AND CONSIDERED BY THE PLANNING COMMISSION OF THE CITY OF SAN ANTONIO, TEXAS , IS HEREBY APPROVED BY SUCH COMMISSION IN ACCORDANCE WITH STATE OR LOCAL LAWS AND REGULATIONS; AND/OR WHERE ADMINISTRATIVE EXCEPTION(S) AND/OR VARIANCE(S) HAVE BEEN GRANTED.

DATED THIS _____ DAY OF _____ ,A.D. 2016.

BY:_____
CHAIRMAN

BY:_____
SECRETARY

STATE OF TEXAS §
COUNTY OF BEXAR §

I,_____, COUNTY CLERK OF SAID COUNTY, DO HEREBY CERTIFY THAT THIS PLAT WAS FILED FOR RECORD IN MY OFFICE, ON THE _____ DAY OF_____ A.D._____AT ___M AND DULY RECORDED THE _____ DAY OF_____ A.D._____AT ___M IN THE RECORDS OF _____OF SAID COUNTY, IN THE BOOK VOLUME _____ ON PAGE_____ ,

IN TESTIMONY WHEREOF, WITNESS MY HAND AND OFFICIAL SEAL OF OFFICE, THIS _____ DAY OF_____ A.D. 2016.

COUNTY CLERK, BEXAR COUNTY, TEXAS

BY: _____, DEPUTY

SHEET 1 OF 1

Date: Oct. 30, 2017, 10:38am User ID: leo.gutierrez
File: F:\2017\117162 NORTHWOOD PARK (IDZ)\Civil 3D\Dwg\Engineer\117162_00_PLAT.dwg