HISTORIC AND DESIGN REVIEW COMMISSION
April 18, 2018

HDRC CASE NO:	**2018-176**
COMMON NAME:	201 BURNET
LEGAL DESCRIPTION:	NCB 534 BLK 24 LOT S IRR 140.28 FT OF 11, S 60 FT OF 12 & S 21.32 FT OF 13
ZONING:	IDZ, D
CITY COUNCIL DIST.:	2
APPLICANT:	Carter Thurmond/Comet Signs
OWNER:	StrEast Parks, LLC
TYPE OF WORK:	Signage
APPLICATION RECEIVED:	February 16, 2018
60-DAY REVIEW:	April 17, 2018

REQUEST:

The applicant is requesting a Certificate of Appropriateness for approval to install one, internally-illuminates, face-lit, channel letter sign on a curved raceway to read "Brooklyn Streat (sic)" to features an overall size of 100 square feet. The sign will feature channel letters that are 2' – 6" tall and an overall length of 40'.

APPLICABLE CITATIONS:

Downtown Design Guide, Chapter 10, Signage

The provisions in this section supplement City Code, Chapter 28: Signs.
Projects involving new building construction must submit a conceptual signage plan with the building elevation plans for design review and approval before individual signs will be reviewed. The sign plan shall address:

- Proposed location of signage;
- General dimensions of signage area; and
- Design & materials guidelines, including colors, letter size, illumination method, etc.

Storefront Commercial
12. Electrical transformer boxes and raceways are required to be concealed from public view.
13. Windows signs should not exceed 15% of the window area. Signs should not obstruct visibility.
14. For projects that have multiple storefront tenants of similar size, all signage should be of the same type (i.e., cut out letters, blade or the like) and relative size and source of illumination.
15. Signs should respect architectural features such as vertical piers and trim work. Signage should be placed in accordance with façade rhythm, scale and proportion, including windows, storefronts and entries.
16. When a large building contains several storefronts, signs for the individual business should relate to each other in terms of location, height, proportion, color and illumination while allowing the observer to readily distinguish between individual stores.
17. External projected lighting fixtures are the preferred method of lighting signs. External lighting emphasizes the continuity of the building‟s surface and signs should appear to be more of an integral part of the building‟s façade.
18. Signs should generally not exceed 14 to 20 feet above the ground or be higher than the building cornice line or street wall height.
19. Tenant directory signs are allowed as wall mounted or freestanding signs for businesses located in alleys, courtyards, arcades or paseos.

C. SIGNAGE GUIDELINES FOR ALL SIGN TYPES

Signs in Context
1. All fascia signage shall be integrated into the architecture. Signs may be mounted to architectural canopies or painted or mounted directly onto building surfaces without a back plate. The signage material will be weather proof and fade resistant.
2. Signs should be conceived as an integral part of the project design so as not to appear as an afterthought.
3. The location, size, and appearance of signs should complement the building and character of the Downtown districts in

which they are located.
4. Signs should respect residential uses within and adjacent to a project. The intent is to promote a more peaceful living environment without undue impacts upon residential uses. Small signs, no animation, limited lighting and shorter operating hours are appropriate where signs are visible from residences.
5. Wall mounted signs on fascias above storefront window should be sized to fit within existing friezes, lintels, spandrels, and other such features and not extend above, below, or beyond them.
6. Graphics and signage may be illuminated by indirect, internal, or bare-bulb sources, providing that glare is not produced; by indirect light sources concealed by a hood or diffuser; by internal illumination with standard opal glass or other translucent material or with an equal or smaller light transmission factor.

FINDINGS:

a. The applicant is requesting a Certificate of Appropriateness for approval to install one, internally-illuminates, face-lit, channel letter sign on a curved raceway to read “Brooklyn Streat (sic)” to features an overall size of 100 square feet. The sign will feature channel letters that are 2’ – 6” tall and an overall length of 40’. The proposed new construction is requested under a separate HDRC case, case number 2018-153.
b. The proposed signage will be constructed of aluminum returns, aluminum backs, white acrylic faces and will feature lighting from white LED’s. The signage will feature painted colors of black, light rust brown and white. The font will be Helvetica. The proposed signage, its size, location and lighting means are consistent with the Downtown Design Guide.

RECOMMENDATION:

Staff recommends approval as submitted based on findings a and b.

CASE MANAGER:

Edward Hall

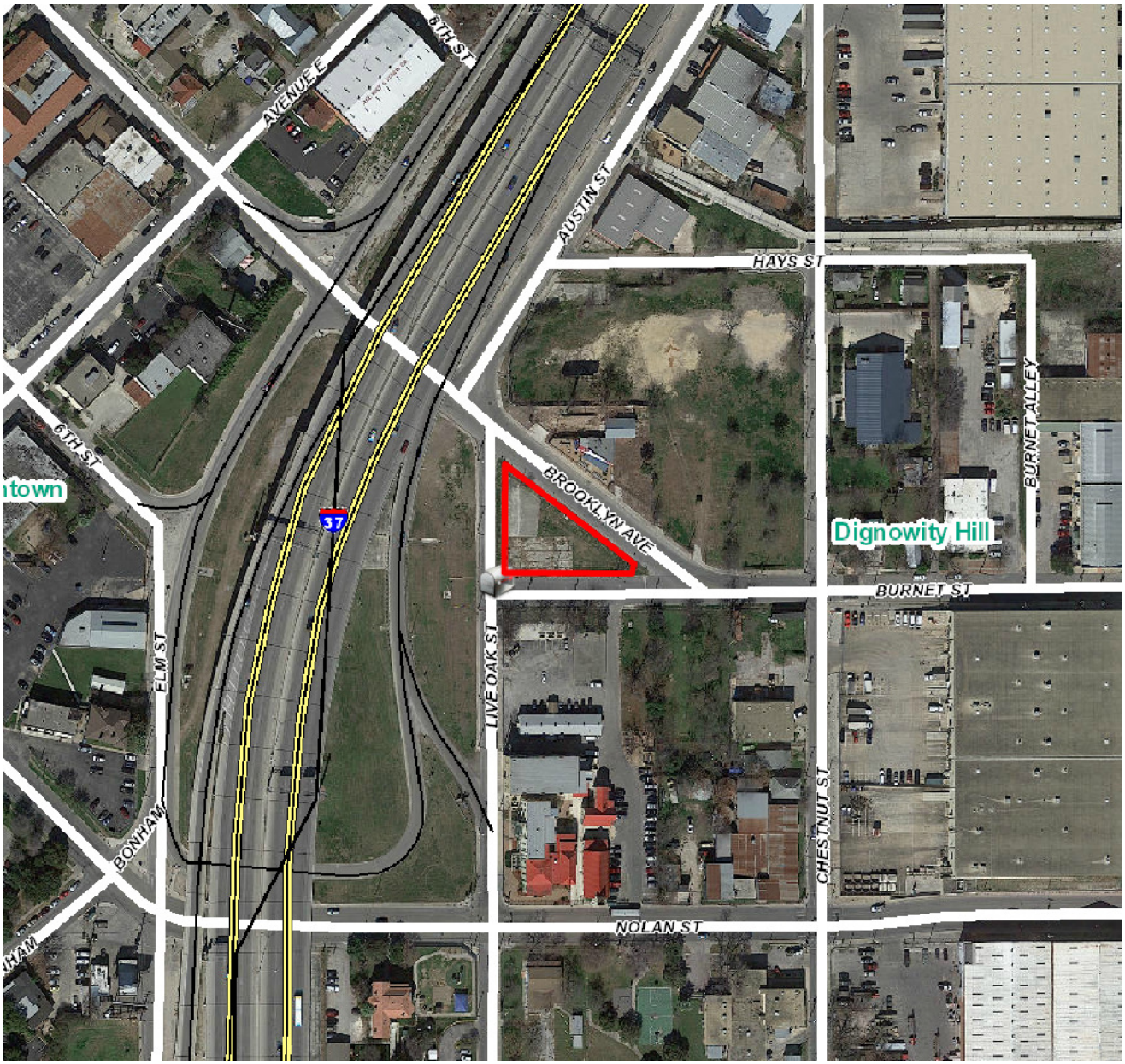

N

Flex Viewer

Powered by ArcGIS Server

Printed:Apr 13, 2018

The City of San Antonio does not guarantee the accuracy, adequacy, completeness or usefulness of any information. The City does not warrant the completeness, timeliness, or positional, thematic, and attribute accuracy of the GIS data. The GIS data, cartographic products, and associated applications are not legal representations of the depicted data. Information shown on these maps is derived from public records that are constantly undergoing revision. Under no circumstances should GIS-derived products be used for final design purposes. The City provides this information on an "as is" basis without warranty of any kind, express or implied, including but not limited to warranties of merchantability or fitness for a particular purpose, and assumes no responsibility for anyone's use of the information.

Photo of all sides of lot- 201 Burnet St.

Site Plan

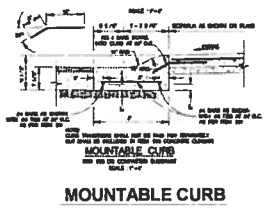

MOUNTABLE CURB

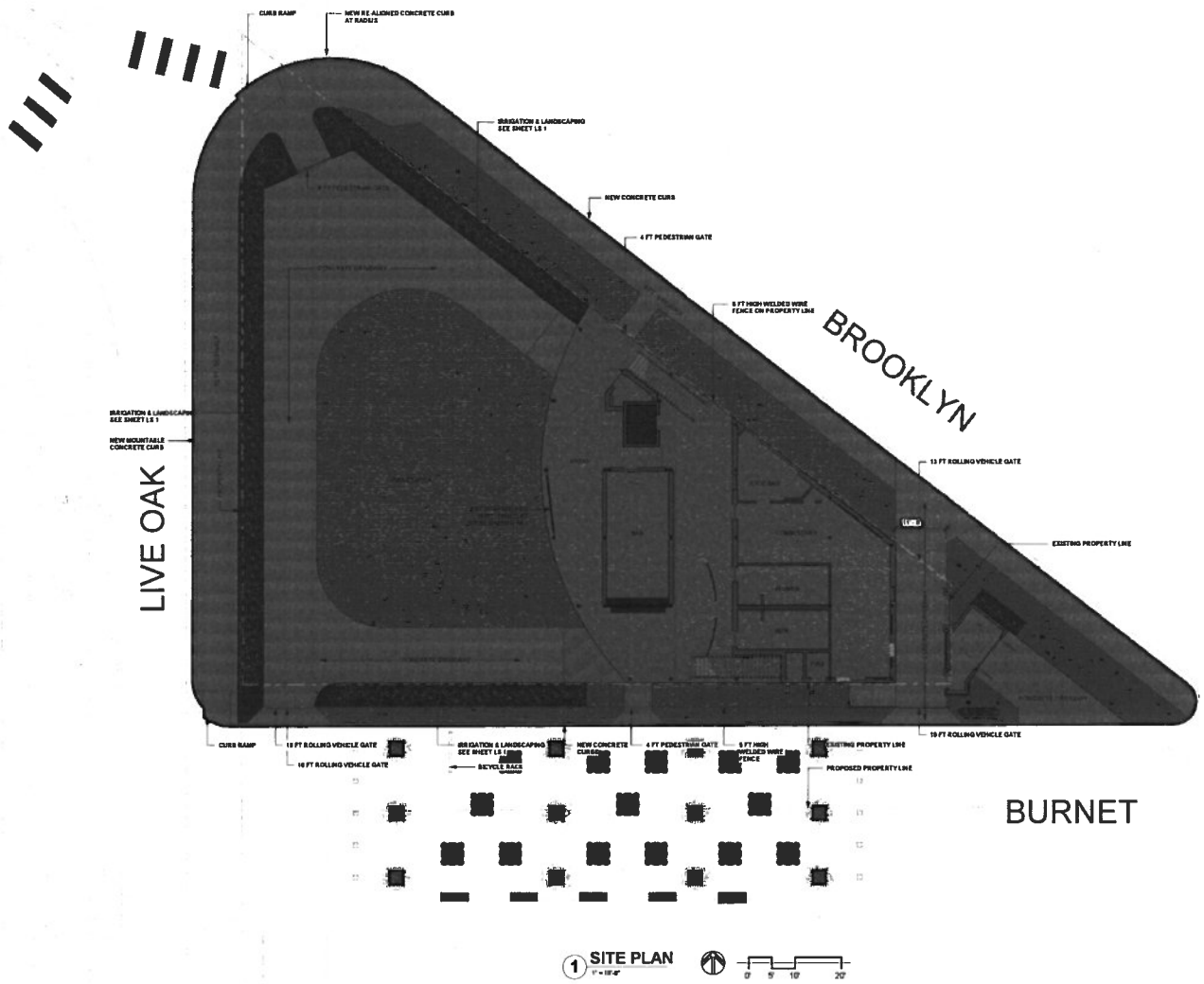

1 SITE PLAN

BROOKLYN STREAT FOOD PARK

201 BURNET, SAN ANTONIO, TEXAS

EXHIBIT A-3
SITE PLAN

SKA Project No. 1709080

SHAWN KAARLSEN & ASSOCIATES
5400 BANDERA RD., SUITE 202
SAN ANTONIO, TX. 78238

INTERIM REVIEW DOCUMENTS - THE DESIGN DOCUMENTS DEPICTED THEREIN ARE INCOMPLETE AND MAY NOT BE USED FOR REGULATORY APPROVAL, PERMIT OR CONSTRUCTION
SHAWN KAARLSEN TX. REGISTRATION NO. 10782

20140218 5:28:27 PM

© 2017 Comet Signs

A S/F, INTERNALLY-ILLUMINATED, FACE-LIT, CL ON RACEWAY — Sq. Ft. 100

QTY: ONE (1) — Scale: 1/4"=1'-0"

SCOPE OF WORK:
Manufacture & Install one (1) S/F, Internally-Illuminated, Face-Lit, Channel Letters on Curved Raceway.

- Raceway to be curved and will go below channel letters.
- Channel Letters to have angle aluminum support structure to hold up backs.
- Font Used: "Helvetica"
- Curved Radius of roof not know at this time.

COLORS:
- Black
- PMS 7594C
- 3M 3630-19 "Light Rust Brown"

01 .040" ALUMINUM RETURNS - PREFINISHED BLACK EXTERIOR, PREFINISHED WHITE INTERIOR.
02 .063" ALUMINUM BACKS -PREFINISHED BLACK EXTERIOR, PREFINISHED WHITE INTERIOR.
03 1" BLACK TRIM CAPS.
04 1/8" SG05 WHITE ACRYLIC FACES # 7328, W/3M 3630-19 "LIGHT RUST BROWN" ON 1ST SURFACE.
05 WHITE LED.
06 LED WIRING.
07 WEEP HOLES.
08 SEALTITE CONDUIT.
09 FASTENERS AS REQUIRED.
10 POWER SUPPLY.
11 DISCONNECT SWITCH.
12 ANGLE ALUMINUM SUPPORT STRUCTURE.
13 EXTR. ALUMINUM RACEWAY; - PT.M. (CALL-OUT NEEDED.)
14 EXISTING BEAM

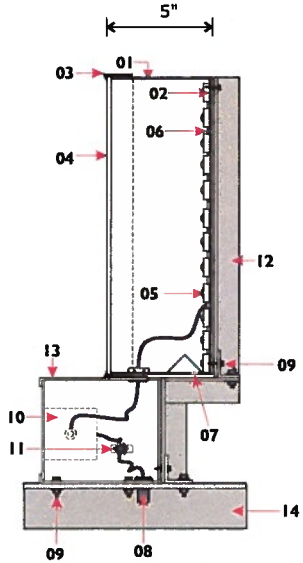

SECTION - SCALE: N.T.S.

Job Name:

Brooklyn Streat

■ Proposal Drawing
☐ Final Drawing

Client: Brooklyn Streat
Location: Brooklyn Ave, San Antonio, TX

Salesperson: Carter T.
Prj. Mngr.: Dabbie Mosley
Date: 2/16/18
Designer: Morgan P.

File Name: 38830 Brooklyn Streat.cdr
Proposal #: 38830
Job #: n/a

Revisions
Note:

License #: 18010

Corporate Office
San Antonio
335 West Turbo
San Antonio, TX 78216
Ph.: (210) 341-7944

Dallas / Ft. Worth Branch
8703 W. Mockingbird Ln. #100
Dallas, TX 75235
Ph.: (972) 870-1504

Houston Branch
2005 Greenhouse Rd.
Houston, TX 77084
Ph.: (281) 492-5501

Austin Branch
2457 S. Loop 4, Bldg. 18
Buda, TX 78610
Ph.: (512) 872-2500

THIS DRAWING IS THE EXCLUSIVE PROPERTY OF COMET SIGNS, LLC. ANY USE OR REPRODUCTION OF THIS DRAWING WITHOUT WRITTEN AUTHORIZATION FROM COMET SIGNS, LLC IS STRICTLY PROHIBITED. OWNERSHIP AND COPYRIGHT IS RETAINED IN ACCORDANCE WITH U.S. AND INTERNATIONAL TRADEMARK / COPYRIGHT LAWS.

© 2017 Comet Signs

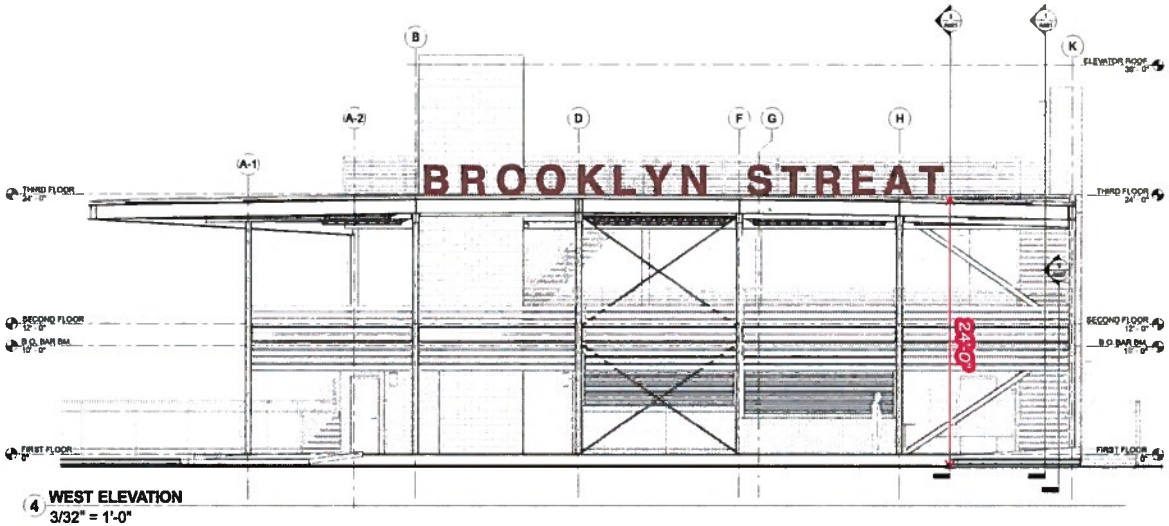

4 **WEST ELEVATION**
3/32" = 1'-0"

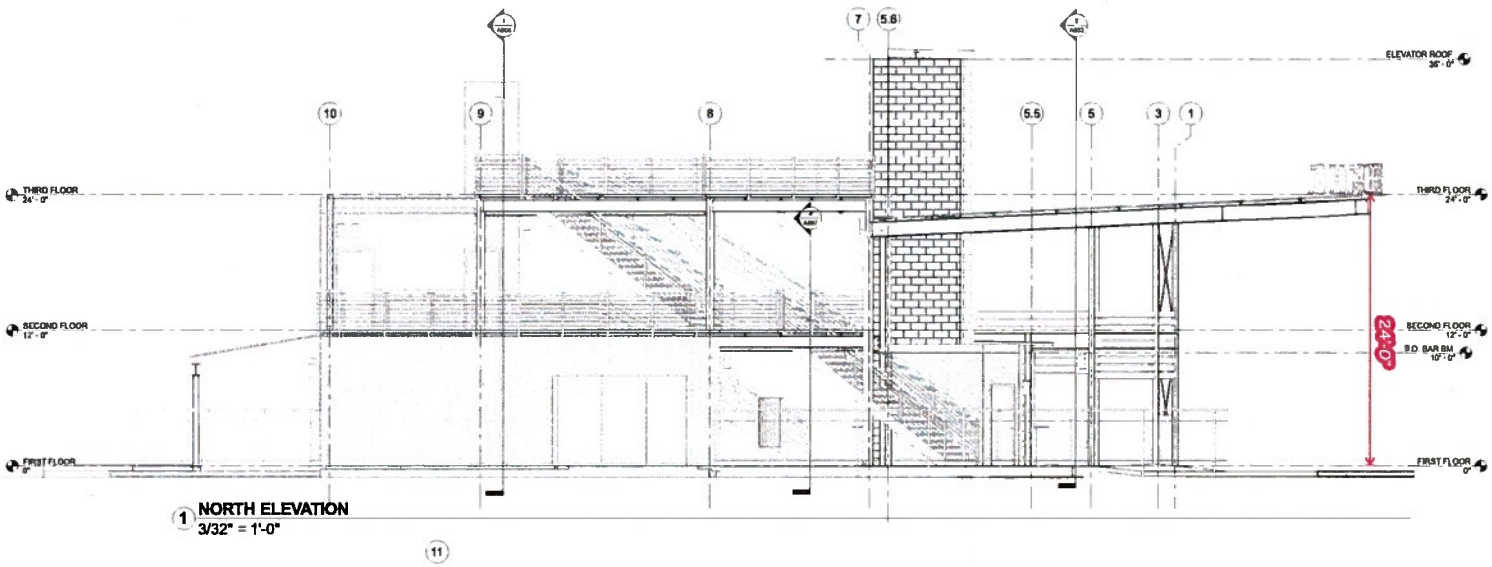

1 **NORTH ELEVATION**
3/32" = 1'-0"

Job Name:

Brooklyn Streat

■ **Proposal Drawing**
☐ Final Drawing

Client: Brooklyn Streat
Location: Brooklyn Ave, San Antonio, TX

Salesperson: Carter T.
Prj. Mngr.: Dabbie Mosley
Date: 2/16/18
Designer: Morgan P.

File Name: 38830 Brooklyn Streat.cdr
Proposal #: 38830
Job #: n/a

Revisions
Note:

License #: 18010

Corporate Office
San Antonio
938 West Turbo
San Antonio, TX 78216
Ph.: (210) 341-7244

Dallas / Ft. Worth Branch
2703 W. Mockingbird Ln. #100
Dallas, TX 75235
Ph.: (972) 870-1594

Houston Branch
2906 Greenhouse Rd.
Houston, TX 77084
Ph.: (281) 488-6501

Austin Branch
2457 S. Loop 4, Bldg. 18
Buda, TX 78610
Ph.: (512) 878-2800

THIS DRAWING IS THE EXCLUSIVE PROPERTY OF COMET SIGNS, LLC. ANY USE OR REPRODUCTION OF THIS DRAWING WITHOUT WRITTEN AUTHORIZATION FROM COMET SIGNS, LLC IS STRICTLY PROHIBITED. OWNERSHIP AND COPYRIGHT IS RETAINED IN ACCORDANCE WITH U.S. AND INTERNATIONAL TRADEMARK / COPYRIGHT LAWS.