HISTORIC AND DESIGN REVIEW COMMISSION
April 18, 2018

HDRC CASE NO:	**2018-171**
ADDRESS:	3323 ROOSEVELT AVE
LEGAL DESCRIPTION:	NCB 11919 BLK 15 LOT 14 /C/
ZONING:	C-2
CITY COUNCIL DIST.:	3
DISTRICT:	Mission Historic District
APPLICANT:	Mike Oxley/Dimension Group
OWNER:	Roosevelt Avenue Joint Venture
TYPE OF WORK:	Signage
APPLICATION RECEIVED:	January 23, 2018
60-DAY REVIEW:	

REQUEST:

The applicant is requesting a Certificate of Appropriateness for approval to:

1. Install two, internally illuminated channel letter signs on a raceway with backer panel to feature approximately 51 square feet in size each.
2. Install two, logo signs to feature a height of 4 feet and a width of approximately 4 feet for a total square footage of approximately 16 square feet each.

APPLICABLE CITATIONS:

Historic Design Guidelines, Chapter 6, Guidelines for Signage

1. General

A. GENERAL
i. Number and size—Each building will be allowed one major and two minor signs. Total requested signage should not exceed 50 square feet.
ii. New signs—Select the type of sign to be used based on evidence of historic signs or sign attachment parts along the building storefront where possible. Design signs to respect and respond to the character and/or period of the area in which they are being placed. Signs should identify the tenant without creating visual clutter or distracting from building features and historic districts.
iii. Scale—Design signage to be in proportion to the facade, respecting the building's size, scale and mass, height, and rhythms and sizes of window and door openings. Scale signage (in terms of its height and width) to be subordinate to the overall building composition.

B. HISTORIC SIGNS
i. Preservation—Preserve historic signs, such as ghost signs or other signs characteristic of the building's or district's period of significance, whenever possible.
ii. Maintenance—Repair historic signs and replace historic parts in-kind when deteriorated beyond repair.

C. PLACEMENT AND INSTALLATION
i. Location—Place signs where historically located and reuse sign attachment parts where they exist. Do not erect signs above the cornice line or uppermost portion of a facade wall, or where they will disfigure or conceal architectural details, window openings, doors, or other significant details.
ii. Obstruction of historic features—Avoid obscuring historic building features such as cornices, gables, porches, balconies, or other decorative elements with new signs.
iii. Damage—Avoid irreversible damage caused by installing a sign. For example, mount a sign to the mortar rather than the historic masonry.
iv. Pedestrian orientation—Orient signs toward the sidewalk to maintain the pedestrian oriented nature of the historic

districts.

D. DESIGN
i. Inappropriate materials—Do not use plastic, fiberglass, highly reflective materials that will be difficult to read, or other synthetic materials not historically used in the district.
ii. Appropriate materials—Construct signs of durable materials used for signs during the period of the building's construction, such as wood, wrought iron, steel, aluminum, and metal grill work.
iii. Color—Limit the number of colors used on a sign to three. Select a dark background with light lettering to make signs more legible.
iv. Typefaces—Select letter styles and sizes that complement the overall character of the building façade. Avoid hard-to-read or overly intricate styles.

E. LIGHTING
i. Lighting sources—Use only indirect or bare-bulb sources that do not produce glare to illuminate signs. All illumination shall be steady and stationary. Internal illumination should not be used.
ii. Neon lighting—Incorporate neon lighting as an integral architectural element or artwork appropriate to the site, if used.

3. Projecting and Wall-Mounted Signs
A. GENERAL
i. Mounting devices—Construct sign frames and panels that will be used to be attach signs to the wall of a building of wood, metal, or other durable materials appropriate to the building's period of construction.
ii. Structural supports—Utilize sign hooks, expansion bolts, or through bolts with washers on the inside of the wall depending upon the weight and area of the sign, and the condition of the wall to which it is to be attached.
iii. Appropriate usage—Limit the use of projecting and wall-mounted signs to building forms that historically used these types of signs, most typically commercial storefronts. To a lesser degree, these signage types may also be appropriate in areas where residential building forms have been adapted for office or retail uses, if sized accordingly.

B. PROJECTING SIGNS
i. Placement—Mount projecting signs perpendicularly to a building or column while allowing eight feet of overhead clearance above public walkways. ii. Public right-of-way—Limit the extension of projecting signs from the building facade into the public right-of-way for a maximum distance of eight feet or a distance equal to two-thirds the width of the abutting sidewalk, whichever distance is greater. iii. Area-Projecting signs should be scaled appropriately in response to the building façade and number of tenants.

C. WALL-MOUNTED SIGNS
i. Area—Limit the aggregate area of all wall-mounted signs to twenty-five percent of a building facade.
ii. Projection—Limit the projection of wall-mounted signs to less than twelve inches from the building wall.
iii. Placement—Locate wall signs on existing signboards—the area above the storefront windows and below the second story windows—when available. Mount wall signs to align with others on the block if an existing signboard is not available.
iv. Channel letters—Avoid using internally-illuminated, wall-mounted channel letters for new signs unless historic precedent exists. Reverse channel letters may be permitted.

4. Freestanding Signs
A. GENERAL
i. Appropriate usage—Freestanding signs are most appropriate in locations where building forms are set back from the street, such as in areas where historic residences have been adapted for office or retail uses, or in commercial districts where they may be used to identify parking areas or other accessory uses.
ii. Placement—Place freestanding signs near the public right-of-way where they are clearly visible to passing pedestrians and motorists, a minimum of five feet from the street right-of-way and ten feet from all interior side lot lines. No freestanding sign should be placed in a manner that obstructs the pedestrian walkway.
iii. Number—Limit the number of freestanding signs per platted lot to one, unless the lot fronts more than one street, in which case, one sign is allowed on each street on which the lot has frontage.
iv. Monument signs—Do not use ―suburban-style‖ monument signs or electronic messaging signs not historically found

in San Antonio's historic districts.

B. DESIGN
i. Height—Limit the height of freestanding signs to no more than six feet.
ii. Area— The size of new signs should be appropriate within the historic context, and should not exceed 25 square feet on either side, for a total of 50 square feet. Appropriate size shall be determined by considering historic precedent, sign patterns within historic districts, and conditions specific to individual properties.
iii. Structural supports—Use subtle structural elements (in terms of their scale and mass) with historically compatible materials to support a freestanding sign.

FINDINGS:

a. The applicant has proposed signage at 3323 Roosevelt Avenue, a Pizza Hut store located within the Mission Historic District and the Mission Protection Overlay District.
b. WALL SIGNS (Text)– The applicant has proposed to install two, internally illuminated channel letter signs on a raceway with backer panel to feature approximately 51 square feet in size each. The Guidelines for Signage 1.A.i note that each building is allowed one major and two minor signs. Total requested square footage should not exceed fifty square feet. The Guidelines for Signage 6.E.i. notes that internal illumination should not be used. The proposed size and design are not consistent with the Guidelines.
c. WALL SIGNS (Logo) – The applicant has proposed to install two, logo signs to feature a height of 4 feet and a width of approximately 4 feet for a total square footage of approximately 16 square feet each. The Guidelines for Signage 6.E.i. notes that internal illumination should not be used. The total requested signage for the property totals at 134 sf. The proposed sizes and designs are not consistent with the Guidelines.
d. POLE SIGN – The existing non-conforming pole sign on site contributes approximately 245 square feet of signage and is currently visible from within the walls of Mission San Jose. Removal of this inappropriate sign would support the request for new building signage.

RECOMMENDATION:

Staff recommends approval of items #1 and #2 with the stipulation that the existing pole sign be removed based on finding d.

CASE MANAGER:

Edward Hall

N

Flex Viewer

Powered by ArcGIS Server

Printed:Apr 13, 2018

The City of San Antonio does not guarantee the accuracy, adequacy, completeness or usefulness of any information. The City does not warrant the completeness, timeliness, or positional, thematic, and attribute accuracy of the GIS data. The GIS data, cartographic products, and associated applications are not legal representations of the depicted data. Information shown on these maps is derived from public records that are constantly undergoing revision. Under no circumstances should GIS-derived products be used for final design purposes. The City provides this information on an "as is" basis without warranty of any kind, express or implied, including but not limited to warranties of merchantability or fitness for a particular purpose, and assumes no responsibility for anyone's use of the information.

EVERYDAY
LUNCH BUFFET
$4.99
Pizza Hut
3323
Pizza Hut

SIGN A	36" Pizza Hut QTY 2
Type:	Channel Letters on a Raceway w/ Backer Panel
Illumination:	Internally Illuminated LED
Square Footage:	52.13
To Grade:	Top of Sign To Grade = Bottom of Sign To Grade =

***Note: Sign specifications meet 100 MPH with 3 second gust windloads**

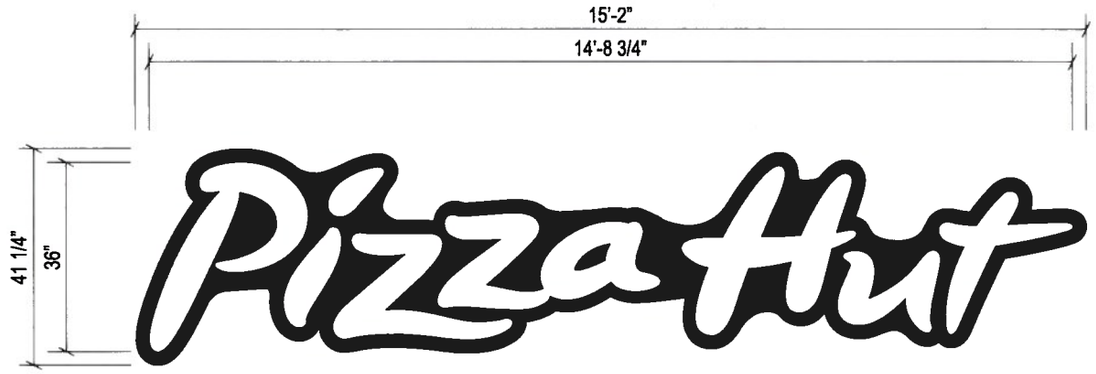

Sign Layout Detail

SCLB-36 Scale: 3/8" = 1'-0"

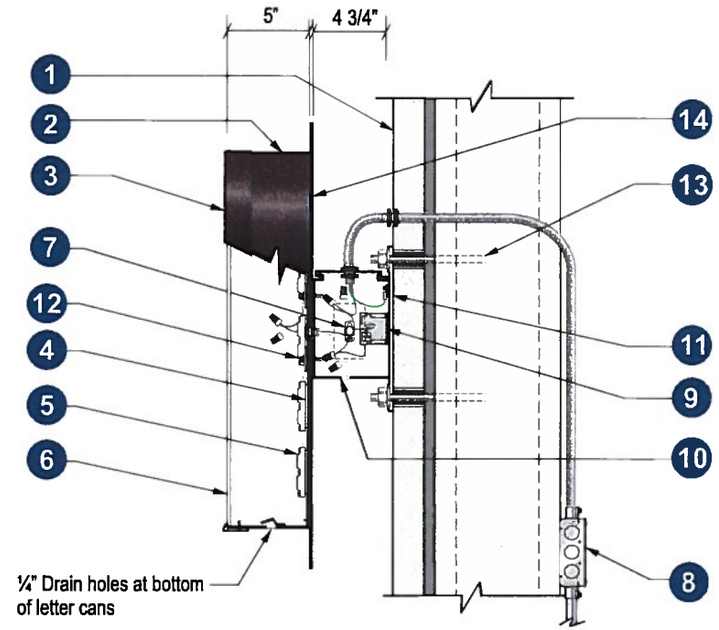

Section @ LED Channel Letter Raceway

Scale: N.T.S.

Electrical Detail:

White LEDs
(2) 60w Transformers @ 1.1 amps
Total Amps: 2.2
(1) 20 amp 120V Circuit Req.

UL LISTED

General Notes:

This sign is to be installed in accordance with the requirements of Article 600 of the National Electrical Code.

1) Grounded and bonded per NEC 600.7/NEC 250
2) Existing branch circuit in compliance with NEC 600.5, not to exceed 20 amps
3) Sign is to be UL listed per NEC 600.3
4) UL disconnect switch per NEC 600.6- required per sign component before leaving manufacturer*
*For multiple signs, a disconnect is permitted but not required for each section

Specifications: Channel Letters / Backer Panel / Raceway

1. Existing Facade: To be determined
2. .040" Aluminum letter returns painted to match Black
3. 1" Jewelite trimcap (painted to match Black) bonded to face, #8 pan head screws to returns
4. .063" Aluminum Backs (interior of sign can painted white for maximum illumination)
5. White LEDs
6. .177-7328 White modified acrylic faces
7. Disconnect switch UL Outdoor rated toggle type w/ neoprene boot per NEC 600-6
8. Primary electrical feed
9. Transformers
10. 0.080" Aluminum raceway (5 1/2" tall x 4 3/4" deep) painted to match the facade
11. 15" x 2" x 0.1875" Aluminum mounting tabs welded to raceway - Maximum 6" from each end and every 48" o.c.
12. #12 x 1" TEC screws with 1 1/4" fender washers
13. Mounting Hardware to suit
14. 0.063" Aluminum backer panel painted Black

Pizza Hut

Client: Pizza Hut
Site #: PZ-27065
Address: 3323 Roosevelt Avenue
San Antonio, TX 78214

REVISION INFO			
01/17/2018	Original Rendering	KD
01/18/2018	Added Wind Specifications & Updated Flush Mounting Section	EW

This rendering is the property of Anchor Sign, Inc. It is for the exclusive use of Anchor Sign, Inc. and the party which requested the rendering. It is an unpublished original drawing not to be distributed, reproduced or exhibited without the consent of Anchor Sign, Inc. Please contact your account manager with questions regarding this statement.

AnchorSign
1.800.213.3331

SIGN A	48" Swirl Logo
Type:	Channel Letters on a Raceway w/ Backer Panel
Illumination:	Internally Illuminated LED
Square Footage:	17.63
To Grade:	Top of Sign To Grade = Bottom of Sign To Grade =

***Note: Sign specifications meet 100 MPH with 3 second gust windloads**

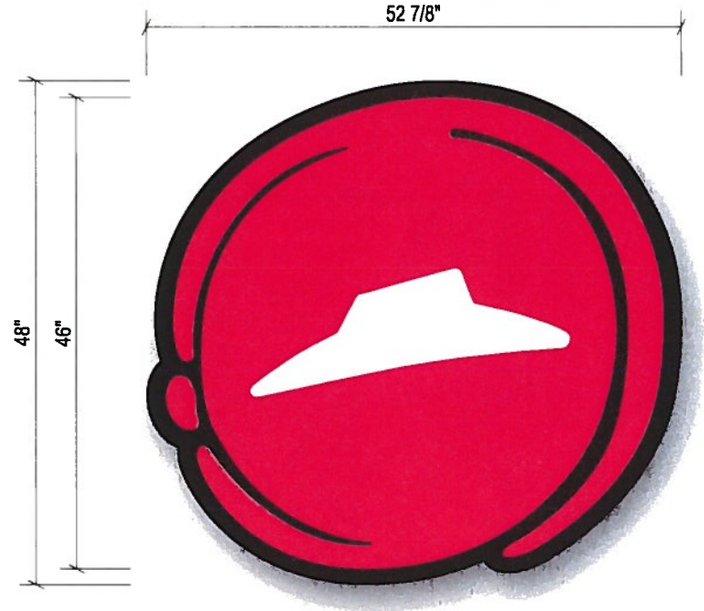

Sign Layout Detail

CSB-48 Scale: 3/4" = 1'-0"

Electrical Detail:

White LEDs
(1) 60w Transformers @ 1.1 amps
Total Amps: 1.1
(1) 20 amp 120V Circuit Req.

UL LISTED

General Notes:

This sign is to be installed in accordance with the requirements of Article 600 of the National Electrical Code.

1) Grounded and bonded per NEC 600.7/NEC 250
2) Existing branch circuit in compliance with NEC 600.5, not to exceed 20 amps
3) Sign is to be UL listed per NEC 600.3
4) UL disconnect switch per NEC 600.6- required per sign component before leaving manufacturer*
*For multiple signs, a disconnect is permitted but not required for each section

Specifications: Channel Letters / Backer Panel / Raceway

1. Existing Facade: To be determined
2. .040" Aluminum letter returns painted to match Black
3. 1"Jewelite trimcap (painted to match Black) bonded to face, #8 pan head screws to returns
4. .063" Aluminum Backs (interior of sign can painted white for maximum illumination)
5. White LEDs
6. .177-7328 White modified acrylic faces
7. Disconnect switch UL Outdoor rated toggle type w/ neoprene boot per NEC 600-6
8. Primary electrical feed
9. Transformers
10. 0.080" Aluminum raceway (5 1/2" tall x 4 3/4" deep) painted to match the facade
11. 15" x 2" x 0.1875" Aluminum mounting tabs welded to raceway - Maximum 6" from each end and every 48" o.c.
12. #12 x 1" TEC screws with 1 1/4" fender washers
13. Mounting Hardware to suit
14. 0.063" Aluminum backer panel painted Black

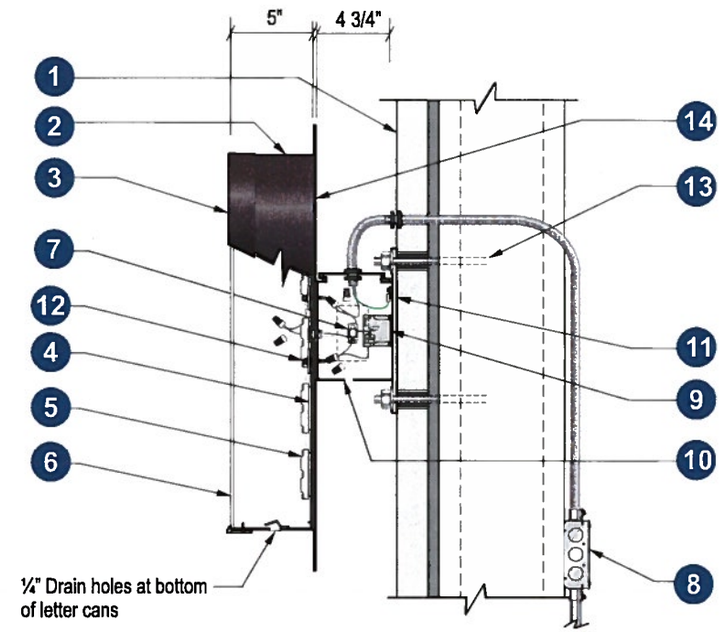

Section @ LED Channel Letter Raceway

Scale: N.T.S.

Pizza Hut

Client: Pizza Hut
Site #: PZ-27065
Address: 3323 Roosevelt Avenue
San Antonio, TX 78214

REVISION INFO			
01/17/2018	Original Rendering	KD
01/18/2018	Added Wind Specifications & Updated Flush Mounting Section	EW

This rendering is the property of Anchor Sign, Inc. It is for the exclusive use of Anchor Sign, Inc. and the party which requested the rendering. It is an unpublished original drawing not to be distributed, reproduced or exhibited without the consent of Anchor Sign, Inc. Please contact your account manager with questions regarding this statement.

AnchorSign
1.800.213.3331

SIGN A	48" Swirl Logo
Type:	Channel Logo on a Backer Panel
Illumination:	Internally Illuminated LED
Square Footage:	17.63
To Grade:	Top of sign to grade = Bottom of sign to grade =

***Note: Sign specifications meet 100 MPH with 3 second gust windloads**

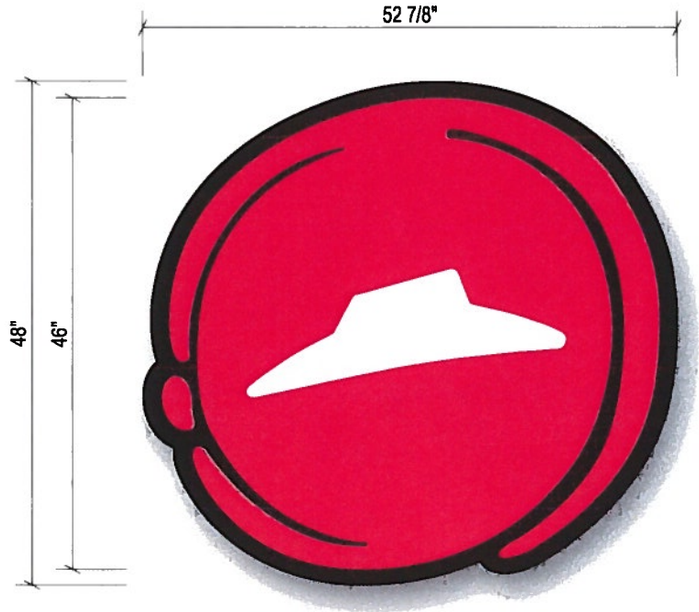

Sign Layout Detail

CSB-48 Scale: 3/4" = 1'-0"

Electrical Detail:

White LEDs
(1) 60w Transformers @ 1.1 amps
Total Amps: 1.1
(1) 20 amp 120V Circuit Req.

UL LISTED

General Notes:

This sign is to be installed in accordance with the requirements of Article 600 of the National Electrical Code.

1) Grounded and bonded per NEC 600.7/NEC 250
2) Existing branch circuit in compliance with NEC 600.5, not to exceed 20 amps
3) Sign is to be UL listed per NEC 600.3
4) UL disconnect switch per NEC 600.6- required per sign component before leaving manufacturer*
*For multiple signs, a disconnect is permitted but not required for each section

Specifications: Channel Letters / Backer Panel

1. Existing Facade: To be determined
2. .040" Aluminum letter returns painted to match Black
3. 1"Jewelite trimcap (painted to match Black) bonded to face, #8 pan head screws to returns
4. .063" Aluminum Backs (interior of sign can painted white for maximum illumination)
5. White LEDs
6. .177-7328 White modified acrylic face w/ applied vinyl to match Black & 3M 3630-33 Red
7. Disconnect switch UL Outdoor rated toggle type w/ neoprene boot per NEC 600-6
8. Primary electrical feed in UL conduit / customer supplied UL junction box
9. Transformers
10. Mounting Hardware to suit
11. 0.063" Aluminum backer panel painted Black

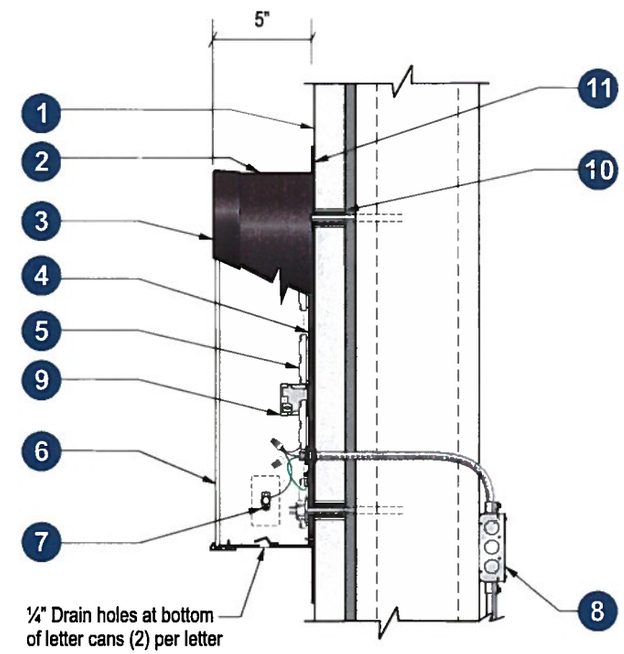

Section @ LED Channel Letter

Front-Lit (Remote) Scale: N.T.S.

Pizza Hut

Client: Pizza Hut
Site #: PZ-27065
Address: 3323 Roosevelt Avenue
San Antonio, TX 78214

REVISION INFO			
01/17/2018	Original Rendering	KD
01/18/2018	Added Wind Specifications & Updated Flush Mounting Section	EW

This rendering is the property of Anchor Sign, Inc. It is for the exclusive use of Anchor Sign, Inc. and the party which requested the rendering. It is an unpublished original drawing not to be distributed, reproduced or exhibited without the consent of Anchor Sign, Inc. Please contact your account manager with questions regarding this statement.

AnchorSign
1.800.213.3331

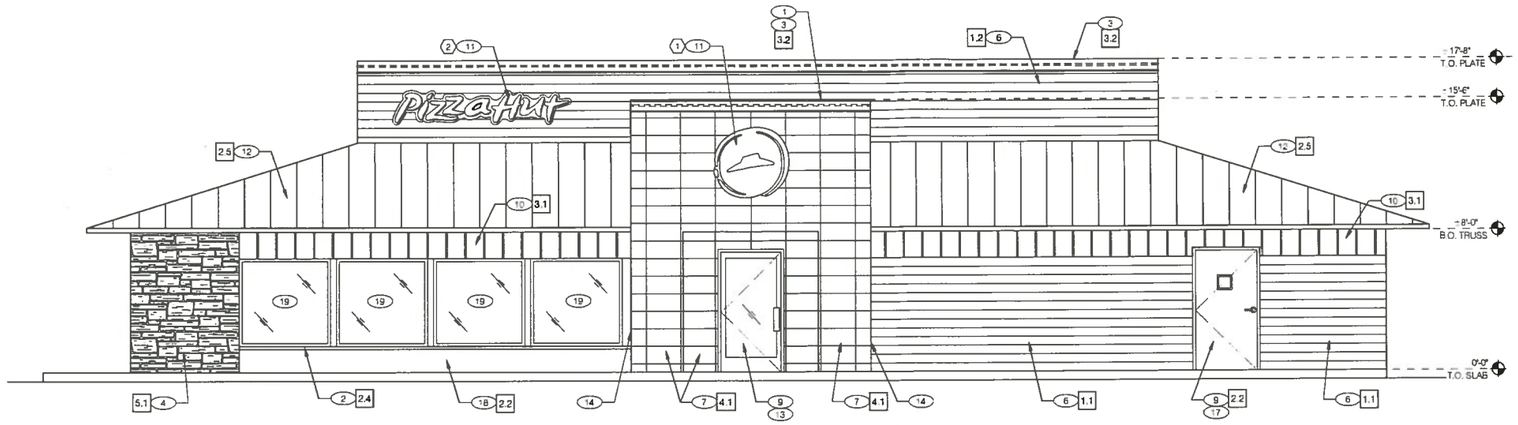

ENTRY SIDE ELEVATION 1/4" = 1'-0" | A

NOTE

SIGNAGE VENDOR TO PROVIDE TRANSFORMERS TO GC PRIOR TO INTERIOR DRYWALLING. GC TO STUB OUT ELECTRICAL PER LOCATIONS SHOWN. ROUTE ALL CONDUIT IN THE EXTERIOR WALL.

NO CONDUIT IS TO PENETRATE THE ROOF.

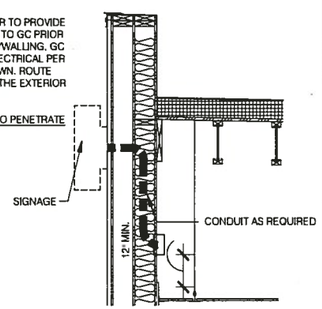

TYP. SIGNAGE DETAIL NTS | J

NOT USED | H

NOT USED | F

X	QTY.	ITEM	REMARKS
1	2	4' LARGE SWIRL W/ LED SEE DTL. J/4.0	
2	2	36" PIZZA HUT SIGN W/ LED SEE DTL. J/4.0	
3	0	MEDIUM SWIRL CABINET	
4	175'-3" SF	STANDING SEAM METAL BAND W/ LED SEE DTL. E/A5.0	NEW INSTALLATION

SIGNAGE SCHEDULE | D

1. NEW "SQUARED" UP TOWER. EXTEND FRAMING ON ENDS AS REQUIRED.
2. PAINT WINDOW SILL TRIM 2.4 MACADAMIA.
3. INSTALL NEW PRE-FINISHED (CLEAR ANODIZED) DURO-GUARD METAL COMPRESSION SYSTEM. SEE DETAIL G/A5.0
4. COVER EXISTING BRICK WITH NEW STONE VENEER.
5. NOT USED
6. G.C. TO INSTALL NEW SIDING. RE: C/A5.0
7. PORCELAIN TILE STACK BOND PATTERN.
8. NOT USED
9. EXISTING DOOR TO REMAIN. G.C. TO VERIFY WEATHER TIGHT SEAL & IN GOOD WORKING CONDITION. NOTIFY OWNER IF REPLACEMENT OR REPAIR IS REQUIRED.
10. INSTALL NEW STANDING SEAM METAL "RED THREAD" FRIEZE BAND 3.1.
11. NEW SIGNAGE. REF. DETAIL J/A4.0 AND SCOPE OF WORK (UNDER SEPARATE PERMIT)
12. PAINT ALL EXISTING STANDING SEAM ROOF TRIM, GUTTERS & ANY EXPOSED EQUIPMENT.
13. STREET NUMBERS, STORE HOURS, SECURITY DECALS-PROVIDED BY BIG IMAGE GRAPHICS AND INSTALLED BY G.C.
14. ALL OUTSIDE CORNERS AT PORCELAIN TILE TO RECEIVE SCHLUTER QUADEC ANTIQUE BRONZE.
15. NOT USED
16. NOT USED
17. PAINT EXISTING DOOR & FRAME.
18. G.C. TO INSTALL NEW SMOOTH FACE CEMENT BOARD SIDING AND TRIM.
19. NEW STOREFRONT WINDOWS, ANODIZED BRONZE FINISH. RE: A1.1.

KEY NOTES | C

SYMBOL	MANUFACTURER	COLOR	REMARKS
1.1	IDENTITY WOOD PRODUCTS	FRESH CRUST	1/2" REVEAL
1.2	IDENTITY WOOD PRODUCTS	EXTRA MUSHROOM (DARK)	1/2" REVEAL
2.1	BENJAMIN MOORE	HERITAGE RED PM-18	SATIN FINISH
2.2	SHERWIN WILLIAMS	FOOTHILLS #SW7514	SATIN FINISH
2.3	SHERWIN WILLIAMS	TRICORN BLACK #SW6528	SATIN FINISH
2.4	SHERWIN WILLIAMS	MACADAMIA #SW6142	SATIN FINISH
2.5	SHERWIN WILLIAMS	BLACK FOX #SW7020	SATIN FINISH
3.1	DMI STANDING SEAM	BRITE RED	TONI HALE @ 821-456-3997 STANDING SEAM SIDING, 2" LOCK & 18" WIDTH
3.2	DURO-GUARD - TRIM CAP	CLEAR ANODIZED	PARAPET CAP & GUTTERS
4.1	CROSSVILLE	BASALT #AV 225	PATTERN: HORIZONTAL STACKED BOND W/ 1/4" SPACING GROUT: CUSTOM BUILDING PRODUCTS #69 CHARCOAL
5.1	ELDORADO STONE - CLIFFSTONE	BARLEY	MIN. GROUT LINE TO HAVE STACKED STONE APPERANCE SILL STONE

EXTERIOR FINISH SCHEDULE | I

NOT USED | G

MISCELLANEOUS
A. SEE SHT A1.1 "WINDOW TYPES" FOR WINDOW ELEVATIONS.
B. SEE SCOPE OF WORK FOR RESPONSIBILITIES.

SEALERS (REFER TO SPECS)
A. SEALANT AT ALL WALL AND ROOF PENETRATIONS.
B. SEALANT AT ALL WINDOW AND DOOR FRAMES AT HEAD AND JAMB. DO NOT SEAL SILL @ WINDOWS.

LEGEND

SLATE TILE 4.1 - SEE I/A4.0

IDENTITY WOOD - SEE I/A4.0

NATURAL STONE 5.1 - SEE I/A4.0

(#) SEE SIGNAGE SCHEDULE.

X-# SEE SHEET I/A4.0 FOR FINISH SCHEDULE.

GENERAL NOTES | E

THE DIMENSION GROUP
ARCHITECTURE · CIVIL ENGINEERING · MEP ENGINEERING
10755 SANDHILL ROAD, DALLAS, TEXAS 75238
TEL: 214-343-9400 www.dimensiongrp.com

TDG #: 17-764

EXPIRES 07.31.18
REGISTERED ARCHITECT CHARLES A. HOFFMANN STATE OF TEXAS
SEAL DATE 1.15.2016

1/15/2018

DATE	DESCRIPTION

CONTRACT DATE	12.06.17
BUILDING TYPE	38 SERIES
PLAN VERSION	VISION 2020
SITE NUMBER	280897
STORE NUMBER	

PIZZA HUT
3323 Roosevelt Avenue
San Antonio, TX 78214

LEVEL 3
SUNSET
VISION 2020
EXTERIOR ELEVATIONS

A4.0

PLOT DATE 1/16/2018

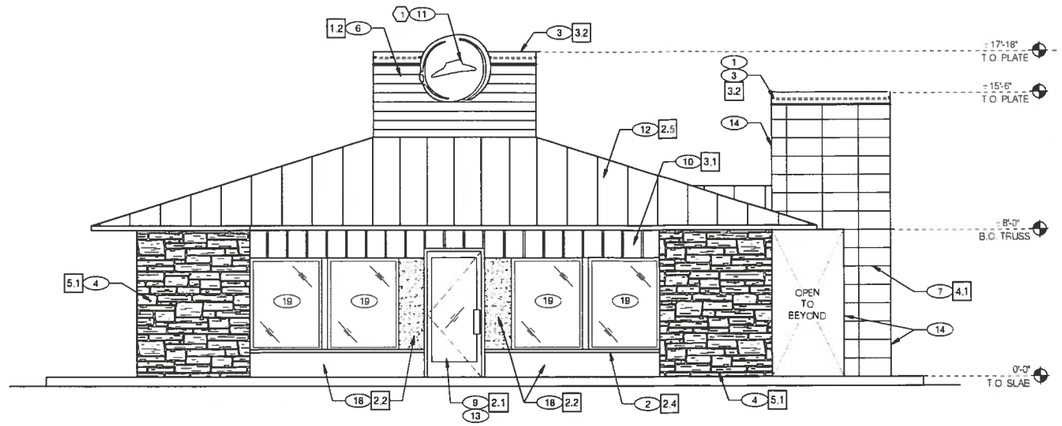

REAR SIDE ELEVATION 1/4" = 1'-0" | **A**

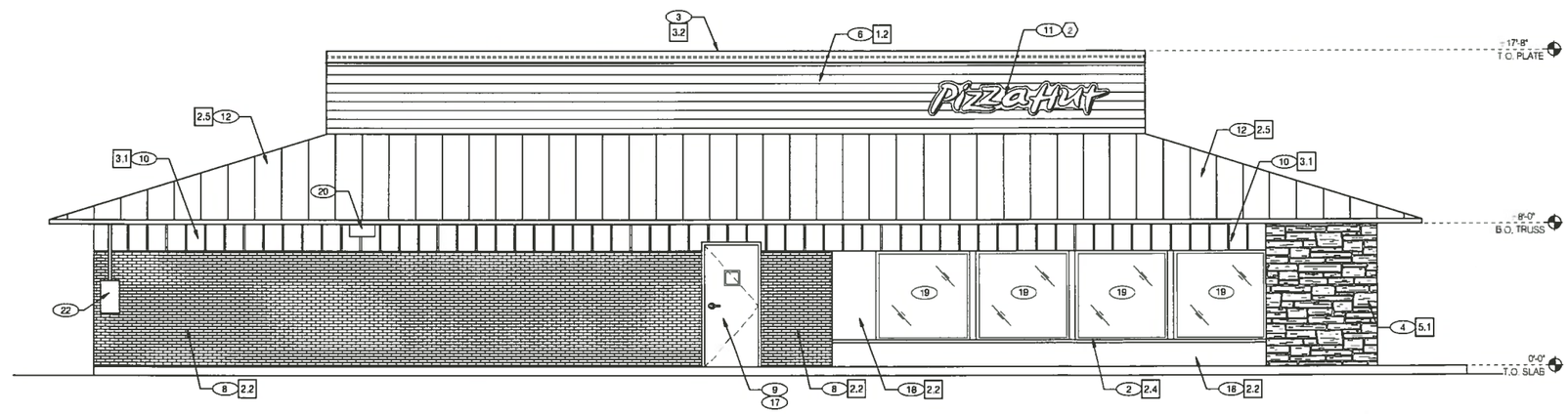

FRONT ELEVATION 1/4" = 1'-0" | **B**

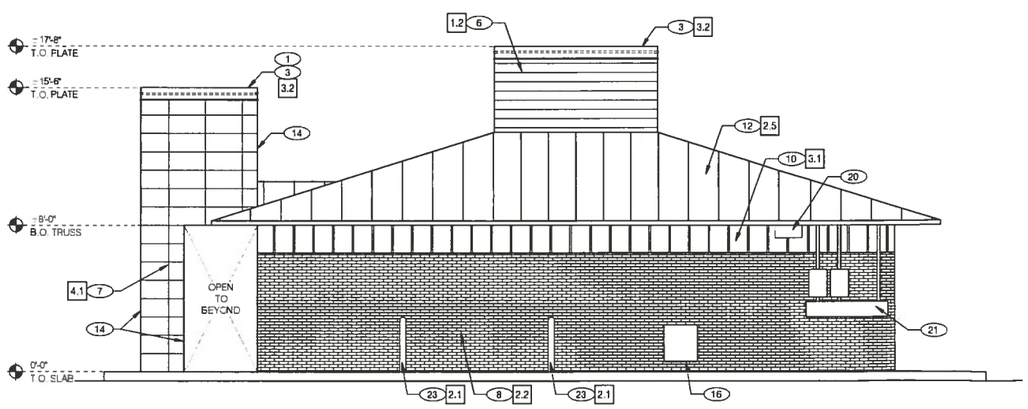

REAR ELEVATION 1/4" = 1'-0" | **C**

1. NEW "SQUARED" UP TOWER. EXTEND FRAMING ON ENDS AS REQUIRED.
2. PAINT WINDOW SILL TRIM 2.4, MACADAMIA.
3. INSTALL NEW PRE-FINISHED (CLEAR ANODIZED) DURO-GUARD METAL COMPRESSION SYSTEM. SEE DETAIL G/A5.0
4. COVER EXISTING BRICK WITH NEW STONE VENEER.
5. NOT USED
6. G.C. TO INSTALL NEW SIDING. RE: C/A5.0
7. PORCELAIN TILE. STACK BOND PATTERN.
8. EXISTING FINISH TO REMAIN. PAINT AS SCHEDULED.
9. EXISTING DOOR TO REMAIN. G.C. TO VERIFY WEATHER TIGHT SEAL & IN GOOD WORKING CONDITION. NOTIFY OWNER IF REPLACEMENT OR REPAIR IS REQUIRED.
10. INSTALL NEW STANDING SEAM METAL "RED THREAD" FRIEZE BAND. 3.1.
11. NEW SIGNAGE, REF. DETAIL J/A4.0 AND SCOPE OF WORK (UNDER SEPARATE PERMIT)
12. PAINT ALL EXISTING STANDING SEAM ROOF, TRIM, GUTTERS & ANY EXPOSED EQUIPMENT.
13. STREET NUMBERS, STORE HOURS, SECURITY DECALS-PROVIDED BY BIG IMAGE GRAPHICS AND INSTALLED BY G.C.
14. ALL OUTSIDE CORNERS AT PORCELAIN TILE TO RECEIVE SCHLUTER QUADEC ANTICUE BRONZE.
15. NOT USED
16. EXISTING GAS METER. DO NOT PAINT.
17. PAINT EXISTING DOOR & FRAME.
18. G.C. TO INSTALL NEW SMOOTH FACE CEMENT BOARD SIDING AND TRIM.
19. NEW STOREFRONT WINDOWS. ANODIZED BRONZE FINISH. RE: A1.1.
20. EXISTING EMERGENCY LIGHTING TO REMAIN. G.C. TO VERIFY FIXTURE & LAMP IN WORKING ORDER.
21. PAINT EXISTING WIRE GUTTER, ELECTRICAL BOXES AND CONDUIT POSTS.
22. EXISTING ELECTRICAL METER DO NOT PAINT.
23. PAINT EXISTING BOLLARDS.

KEY NOTES | **D**

MISCELLANEOUS
A. SEE SHT A1.1 "WINDOW TYPES" FOR WINDOW ELEVATIONS.
B. SEE SCOPE OF WORK FOR RESPONSIBILITIES.

SEALERS (REFER TO SPECS)
A. SEALANT AT ALL WALL AND ROOF PENETRATIONS.
B. SEALANT AT ALL WINDOW AND DOOR FRAMES AT HEAD AND JAMB. DO NOT SEAL SILL @ WINDOWS.

LEGEND

SLATE TILE 4.1 - SEE I/A4.0

IDENTITY WOOD - SEE I/A4.0

EXISTING BRICK

NATURAL STONE 5.1 - SEE I/A4.0

(#) SEE SIGNAGE SCHEDULE.

X-# SEE SHEET I/A4.0 FOR FINISH SCHEDULE.

GENERAL NOTES | **E**

THE DIMENSION GROUP
ARCHITECTURE · CIVIL ENGINEERING · MEP ENGINEERING
10755 SANDHILL ROAD, DALLAS, TEXAS 75238
TEL: 214-343-9400 www.dimensiongrp.com

TDG #: 17-764

EXPIRES 07.31.18
REGISTERED ARCHITECT CHARLES A. HOFFMANN STATE OF TEXAS
SEAL DATE 1.15.2018

1/15/2018

△	DATE	DESCRIPTION
△		
△		
△		
△		
△		
△		
△		
△		

CONTRACT DATE	12.06.17
BUILDING TYPE	39 SERIES
PLAN VERSION	VISION 2020
SITE NUMBER	280697
STORE NUMBER	

PIZZA HUT
3323 Roosevelt Avenue
San Antonio, TX 78214

LEVEL 3
SUNSET
VISION 2020
EXTERIOR ELEVATIONS

A4.1

PLOT DATE 1/16/2018

Pizza Hut