HISTORIC AND DESIGN REVIEW COMMISSION

September 19, 2018

HDRC CASE NO:	**2018-223**
ADDRESS:	206 W LULLWOOD AVE
LEGAL DESCRIPTION:	NCB 6533 BLK 13 LOT 25, AND 26
ZONING:	R-5 H
CITY COUNCIL DIST.:	1
DISTRICT:	Monte Vista Historic District
APPLICANT:	Paul Casseb, Jr., AIA
OWNER:	The Dennis P & Jane A Lindsey Living Trust
TYPE OF WORK:	Construction of a 2-story single family structure and 2-story rear accessory structure, site wall modifications
APPLICATION RECEIVED:	August 31, 2018
60-DAY REVIEW:	October 30, 2018

REQUEST:

The applicant is requesting conceptual approval to construct a two-story residential structure and a two-story rear accessory structure on the vacant lot at 206 W Lullwood. The proposal also includes hardscaping, landscaping, and modifications to an existing stone wall.

APPLICABLE CITATIONS:

Historic Design Guidelines, Chapter 4,Guidelines for New Construction

1. Building and Entrance Orientation
A. FAÇADE ORIENTATION
i. *Setbacks*—Align front facades of new buildings with front facades of adjacent buildings where a consistent setback has been established along the street frontage. Use the median setback of buildings along the street frontage where a variety of setbacks exist. Refer to UDC Article 3, Division 2. Base Zoning Districts for applicable setback requirements.
ii. *Orientation*—Orient the front façade of new buildings to be consistent with the predominant orientation of historic buildings along the street frontage.
B. ENTRANCES
i. *Orientation*—Orient primary building entrances, porches, and landings to be consistent with those historically found along the street frontage. Typically, historic building entrances are oriented towards the primary street.

2. Building Massing and Form
A. SCALE AND MASS
i. *Similar height and scale*—Design new construction so that its height and overall scale are consistent with nearby historic buildings. In residential districts, the height and scale of new construction should not exceed that of the majority of historic buildings by more than one-story. In commercial districts, building height shall conform to the established pattern. If there is no more than a 50% variation in the scale of buildings on the adjacent block faces, then the height of the new building shall not exceed the tallest building on the adjacent block face by more than 10%.
ii. *Transitions*—Utilize step-downs in building height , wall-plane offsets, and other variations in building massing to provide a visual transition when the height of new construction exceeds that of adjacent historic buildings by more than one-half story.
iii. *Foundation and floor heights*—Align foundation and floor-to-floor heights (including porches and balconies) within one foot of floor-to-floor heights on adjacent historic structures.
B. ROOF FORM
i. *Similar roof forms*—Incorporate roof forms—pitch, overhangs, and orientation—that are consistent with those predominantly found on the block. Roof forms on residential building types are typically sloped, while roof forms on non-residential building types are more typically flat and screened by an ornamental parapet wall.
C. RELATIONSHIP OF SOLIDS TO VOIDS
i. *Window and door openings*—Incorporate window and door openings with a similar proportion of wall to window space as typical with nearby historic facades. Windows, doors, porches, entryways, dormers, bays, and pediments shall be

considered similar if they are no larger than 25% in size and vary no more than 10% in height to width ratio from adjacent historic facades.
ii. *Façade configuration*— The primary façade of new commercial buildings should be in keeping with established patterns. Maintaining horizontal elements within adjacent cap, middle, and base precedents will establish a consistent street wall through the alignment of horizontal parts. Avoid blank walls, particularly on elevations visible from the street. No new façade should exceed 40 linear feet without being penetrated by windows, entryways, or other defined bays.
D. LOT COVERAGE
i. *Building to lot ratio*— New construction should be consistent with adjacent historic buildings in terms of the building to lot ratio. Limit the building footprint for new construction to no more than 50 percent of the total lot area, unless adjacent historic buildings establish a precedent with a greater building to lot ratio.

3. Materials and Textures
A. NEW MATERIALS
i. *Complementary materials*—Use materials that complement the type, color, and texture of materials traditionally found in the district. Materials should not be so dissimilar as to distract from the historic interpretation of the district. For example, corrugated metal siding would not be appropriate for a new structure in a district comprised of homes with wood siding.
ii. *Alternative use of traditional materials*—Consider using traditional materials, such as wood siding, in a new way to provide visual interest in new construction while still ensuring compatibility.
iii. *Roof material*s—Select roof materials that are similar in terms of form, color, and texture to traditionally used in the district.
iv. *Metal roofs*—Construct new metal roofs in a similar fashion as historic metal roofs. Refer to the Guidelines for Alterations and Maintenance section for additional specifications regarding metal roofs.
v. *Imitation or synthetic materials*—Do not use vinyl siding, plastic, or corrugated metal sheeting. Contemporary materials not traditionally used in the district, such as brick or simulated stone veneer and Hardie Board or other fiberboard siding, may be appropriate for new construction in some locations as long as new materials are visually similar to the traditional material in dimension, finish, and texture. EIFS is not recommended as a substitute for actual stucco.
B. REUSE OF HISTORIC MATERIALS
Salvaged materials—Incorporate salvaged historic materials where possible within the context of the overall design of the new structure.

4. Architectural Details
A. GENERAL
i. *Historic context*—Design new buildings to reflect their time while respecting the historic context. While new construction should not attempt to mirror or replicate historic features, new structures should not be so dissimilar as to distract from or diminish the historic interpretation of the district.
ii. *Architectural details*—Incorporate architectural details that are in keeping with the predominant architectural style along the block face or within the district when one exists. Details should be simple in design and should complement, but not visually compete with, the character of the adjacent historic structures or other historic structures within the district. Architectural details that are more ornate or elaborate than those found within the district are inappropriate.
iii. *Contemporary interpretations*—Consider integrating contemporary interpretations of traditional designs and details for new construction. Use of contemporary window moldings and door surroundings, for example, can provide visual interest while helping to convey the fact that the structure is new. Modern materials should be implemented in a way that does not distract from the historic structure.

5. Garages and Outbuildings
A. DESIGN AND CHARACTER
i. *Massing and form*—Design new garages and outbuildings to be visually subordinate to the principal historic structure in terms of their height, massing, and form.
ii. *Building size* – New outbuildings should be no larger in plan than 40 percent of the principal historic structure footprint.
iii. *Character*—Relate new garages and outbuildings to the period of construction of the principal building on the lot through the use of complementary materials and simplified architectural details.
iv. *Windows and doors*—Design window and door openings to be similar to those found on historic garages or outbuildings in the district or on the principle historic structure in terms of their spacing and proportions.

v. *Garage doors*—Incorporate garage doors with similar proportions and materials as those traditionally found in the district.
B. SETBACKS AND ORIENTATION
i. *Orientation*—Match the predominant garage orientation found along the block. Do not introduce front-loaded garages or garages attached to the primary structure on blocks where rear or alley-loaded garages were historically used.
ii. *Setbacks*—Follow historic setback pattern of similar structures along the streetscape or district for new garages and outbuildings. Historic garages and outbuildings are most typically located at the rear of the lot, behind the principal building. In some instances, historic setbacks are not consistent with UDC requirements and a variance may be required.

6. Mechanical Equipment and Roof Appurtenances
A. LOCATION AND SITING
i. *Visibility*—Do not locate utility boxes, air conditioners, rooftop mechanical equipment, skylights, satellite dishes, and other roof appurtenances on primary facades, front-facing roof slopes, in front yards, or in other locations that are clearly visible from the public right-of-way.
ii. *Service Areas*—Locate service areas towards the rear of the site to minimize visibility from the public right-of-way.
B. SCREENING
i. *Building-mounted equipment*—Paint devices mounted on secondary facades and other exposed hardware, frames, and piping to match the color scheme of the primary structure or screen them with landscaping.
ii. *Freestanding equipment*—Screen service areas, air conditioning units, and other mechanical equipment from public view using a fence, hedge, or other enclosure.
iii. *Roof-mounted equipment*—Screen and set back devices mounted on the roof to avoid view from public right-of-way.

7. Designing for Energy Efficiency
A. BUILDING DESIGN
i. *Energy efficiency*—Design additions and new construction to maximize energy efficiency.
ii. *Materials*—Utilize green building materials, such as recycled, locally-sourced, and low maintenance materials whenever possible.
iii. *Building elements*—Incorporate building features that allow for natural environmental control – such as operable windows for cross ventilation.
iv. *Roof slopes*—Orient roof slopes to maximize solar access for the installation of future solar collectors where compatible with typical roof slopes and orientations found in the surrounding historic district.
B. SITE DESIGN
i. *Building orientation*—Orient new buildings and additions with consideration for solar and wind exposure in all seasons to the extent possible within the context of the surrounding district.
ii. *Solar access*—Avoid or minimize the impact of new construction on solar access for adjoining properties.
C. SOLAR COLLECTORS
i. *Location*—Locate solar collectors on side or rear roof pitch of the primary historic structure to the maximum extent feasible to minimize visibility from the public right-of-way while maximizing solar access. Alternatively, locate solar collectors on a garage or outbuilding or consider a ground-mount system where solar access to the primary structure is limited.
ii. *Mounting (sloped roof surfaces)*—Mount solar collectors flush with the surface of a sloped roof. Select collectors that are similar in color to the roof surface to reduce visibility.
iii. *Mounting (flat roof surfaces)*—Mount solar collectors flush with the surface of a flat roof to the maximum extent feasible. Where solar access limitations preclude a flush mount, locate panels towards the rear of the roof where visibility from the public right-of-way will be minimized.

OHP Window Policy Document

Windows used in new construction should:
- Maintain traditional dimensions and profiles;
- Be recessed within the window frame. Windows with a nailing strip are not recommended;
- Feature traditional materials or appearance. Wood windows are most appropriate. Double-hung, block frame windows that feature alternative materials may be considered on a case-by-case basis;
- Feature traditional trim and sill details. Paired windows should be separated by a wood mullion. The use of low-e glass is appropriate in new construction provided that hue and reflectivity are not drastically different from regular glass.

FINDINGS:

a. The applicant has proposed to construct a 2-story single family home and a 2-story rear accessory structure on the vacant lot at 206 W Lullwood Ave, located within the Monte Vista Historic District. The primary structure will feature a footprint of approximately 1,587 square feet and the rear accessory structure will feature a footprint of approximately 884 square feet. The proposal also includes a covered walkway between the two structures, hardscaping, landscaping, and modifications to an existing stone wall on the property. The property is an interior lot on the south side of W Lullwood Ave between Howard St to the east and Belknap St to the west. This portion of W Lullwood Ave is predominantly defined by 1-story historic homes in the Tudor and Spanish Eclectic styles, with a 2-story historic stone Tudor home located directly to the east. A 2-story historic home with Colonial Revival influences is located at the corner of W Lullwood Ave and Belknap St. The south side of the block, where the vacant lot is located, is primarily defined by the Tudor Revival style.

b. The applicant received conceptual approval from the Historic and Design Review Commission (HDRC) on May 16, 2018. The approval carried the following stipulations:
    1. That the applicant modifies the front setback to be at least 45'-0" as noted in finding e; **this stipulation has been met.**
    2. That the applicant increases the pitch of the front gables and the pitch and proportions of the second story dormer to be more representative of the Tudor Revival style as noted in finding k; **this stipulation has been met.**
    3. That the applicant modifies the proposed chimney be a true exterior chimney versus an interior chimney that is flush with the exterior façade as noted in finding o; **the applicant has eliminated the chimney from their proposal.**
    4. That the proposed square windows be modified to be more consistent with the Historic Design Guidelines and historic proportions as noted in findings l and u; **this stipulation has been met.**
    5. That the stucco features a trowel finish. A final specification and finish information should be provided in the submission for final approval; **this stipulation has been met.**
    6. That the front walkway be made of concrete in lieu of pavers and that a comprehensive landscaping plan be submitted for final approval as noted in findings z and bb; **this stipulation has been met.**
    7. That the applicant submits a final window specification for the proposed aluminum-clad wood windows to staff for review and approval. Meeting rails must be no taller than 1.25" and stiles no wider than 2.25". White manufacturer's color is not allowed, and color selection must be presented to staff. There should be a minimum of two inches in depth between the front face of the window trim and the front face of the top window sash. This must be accomplished by recessing the window sufficiently within the opening or with the installation of additional window trim to add thickness. Window trim must feature traditional dimensions and architecturally appropriate sill detail. Window track components must be painted to match the window trim or concealed by a wood window screen set within the opening; **this stipulation has been partially met.**

c. CASE HISTORY – The applicant met with the Design Review Committee (DRC) on February 27, 2018, to review a previous iteration of the submitted design. The DRC provided feedback on several items, including reducing the complexity of the roof forms on the primary structure, relocating the front door to align with the entrance of the front porch, reducing the number of window sizes and configurations, and relocating several windows on the front façade to be more consistent with the Guidelines. The applicant met with the DRC on March 27, 2018, to review the current submittal. The DRC again recommended that the complexity of the roofline, particularly the rear roofline, be reduced. It was recommended that the two windows on the west side of the first floor on the front elevation be relocated away from the vertical trim pieces and placed more consistently on the façade. The DRC also recommended implementing window sizes and proportions on the front façade that are more similar to the rear façade, which are taller, rectangular, and more consistent with existing patterns and precedents. The DRC encouraged the applicant to carry the architectural language for columns consistently throughout the project.

<u>Findings for the primary structure:</u>

d. ARCHITECTURAL PRECEDENT – As noted in finding a, the south side of W Lullwood Ave is primarily defined by 1-story Tudor Revival homes or eclectic homes with Tudor Revival influences. Prominent features of the Tudor Revival style include a defined gabled front entrance, steeply pitched gable roofs, large exterior chimneys, and rectangular windows with multi-pane glazing or decorative window screens. The applicant's proposal for new construction is influenced by the Tudor Revival style and features a combination of hipped and

gable roofs, an asymmetrical front porch with battered columns, a prominent bay window, and decorative brackets. In general, the proposal is appropriate for the predominant style of the block and aligns with the consistent development pattern established in the early 1900s, primarily in terms of height, entrance design, and materiality.

e. SETBACKS – According to the Guidelines for New Construction, the front facades of new buildings are to align with front facades of adjacent buildings where a consistent setback has been established along the street frontage. Additionally, the orientation of new construction should be consistent with the historic example found on the block. Based on the submitted site plan, the applicant has proposed a front setback measuring 42'-0" from the street and side setbacks measuring 5'-1". The front setback pattern of W Lullwood Ave is fairly consistent, with most structures – both 1-story and 2-story – sharing a setback that is roughly between 42'-0" and 50'-0". Based on the setback assessment submitted by the applicant, the historic structure to the west features a setback of 43'-0" and the historic structure to the east features a setback of 45'-0". Staff finds that the applicant should increase the front setback of the new primary structure to a minimum of 45'-0" to be more consistent with the Historic Design Guidelines. Regarding the side setbacks, the historic development pattern of the block features deep and narrow lots with minimal side setbacks. Staff finds the proposed side setbacks appropriate based on the existing context of the surrounding streets.

f. LOT COVERAGE – According to the Historic Design Guidelines, new construction should be consistent with adjacent historic buildings in terms of the building to lot ratio. The building footprint for new construction should be limited to no more than 50 percent of the total lot area unless adjacent historic buildings establish a precedent with a greater building to lot ratio. According to the submitted site plan, the existing lot measures 6,432 square feet. The proposed building lot coverage totals approximately 3,025 square feet, or 47 percent of the total lot. Additionally, neighboring historic structures on the south side of W Lullwood Ave feature a lot coverage that nearly meets or exceeds 50 percent. There is a historic precedent for the proposed lot coverage. Staff finds the proposal generally consistent.

g. ENTRANCES: ORIENTATION – According to the Guidelines for New Construction 1.B.i., primary building entrances should be oriented towards the primary street. The applicant has proposed to orient the primary entrance towards W Lullwood Ave. This is consistent with the Guidelines and the development pattern of neighboring homes.

h. ENTRANCES: FRONT PORCH – The applicant has proposed a gabled front porch with a depth of approximately five feet. Historic structures throughout the Monte Vista Historic District feature distinct porches that engage the pedestrian streetscape and feature numerous widths, depths and roof styles. Staff finds that the depth, form, and width of the porch is appropriate.

i. SCALE & MASSING – Per the Guidelines for New Construction 2.A.i., a height and massing similar to historic structures in the vicinity of the proposed new construction should be used. The applicant has proposed a 2-story structure. The overall height of the primary structure is 22'-6", not including the foundation. According to the Historic Design Guidelines, new construction should feature a height that is consistent with nearby historic homes. As noted in finding a, W Lullwood Ave is characterized by primarily 1-story single family homes. Staff The applicant has not provided an assessment or study of the ridgeline heights of nearby structures. Staff finds that the roofline and overall design approach to the massing of the structure minimizes its visual impact from the street and surrounding structures. Staff finds the scale appropriate for the context of the block.

j. FOUNDATION – According to the Guidelines for New Construction 2.A.iii., foundation and floor heights should be aligned within one (1) foot of neighboring structure's foundations. Historic structures found throughout this portion of the Monte Vista Historic District feature foundation heights of two to three feet in height. The applicant has not indicated the foundation height on the submitted elevations, but based on the information provided, the foundation appears to be between one and one and a half feet in height. Staff finds the proposed foundation height generally consistent, but requires dimensional information to make a full determination on appropriateness.

k. ROOF FORM – The applicant has proposed a primary side gable roof form with three gables on the front façade to be reflective of the Tudor Revival roof forms on the block. Guideline 3.A.iv states that new roofs should be constructed in a similar fashion as historic roofs in the district in terms of pitch, orientation, and overhangs. Staff finds the two front gables on the first floor generally appropriate, but finds that the pitch and proportion of the second story gable is not consistent with Tudor Revival precedents. Staff finds that the pitch of this gable should be increased.

l. WINDOW & DOOR OPENINGS – Per the Guidelines for New Construction 2.C.i., window and door openings with similar proportions of wall to window space as typical with nearby historic facades should be incorporated into new construction. The applicant has proposed several window openings that are consistent with historic precedents. However, the front façade features a blank space on the western edge of the first story that is not

consistent with development patterns in the district. Staff finds that fenestration should be incorporated in this space that is consistent with window sizes and patterns in the district. The double windows found on the structure should feature a true ganged condition with appropriately scaled trim.

m. MATERIALS – The applicant has proposed materials that include a stucco siding finish, wooden porch posts, a composition shingle and standing seam metal roof, and aluminum-clad wood windows. Generally, staff finds these materials appropriate.
n. WINDOW AND TRIM MATERIALS – The applicant proposed to install aluminum-clad wood windows. Staff finds the proposal appropriate. The windows should comply with the OHP Window Policy Document for New Construction and the stipulations listed in the recommendation. The applicant has also proposed to incorporate stucco trim surrounding the windows and doors. Staff does not find this to be appropriate or consistent with the pattern in the district. Staff finds that the applicant should incorporate traditional wood window trim and sill detailing.
o. CHIMNEY – In their submission for conceptual approval, the applicant has proposed a chimney on the west façade of the structure. As was proposed, the chimney was internal and not an integral architectural feature of the design. As noted in finding d, Tudor Revival homes on the south side of the block include large chimneys as key architectural features. Staff found that the chimney should be a true external chimney to be more consistent with the block and the style of the structure. In the current submission, the applicant has eliminated the proposed chimney. Based on a windshield survey of the block, all homes feature a chimney, with several of the Tudor homes containing a chimney as a key architectural element of the front or side façade. Staff finds that a chimney should be reincorporated that meets the original stipulation listed in the conceptual approval language.
p. ARCHITECTURAL DETAILS – New buildings should be designed to reflect their time while representing the historic context of the district. Additionally, architectural details should be complementary in nature and should not detract from nearby historic structures. The architectural details of the proposal are an interpretation of the Tudor Revival style. Staff finds this to be appropriate.
q. MECHANICAL EQUIPMENT – Per the Guidelines for New Construction, all mechanical equipment should be screened from view at the public right of way. The applicant has indicated that the A/C unit will be located at the rear of the structure. The applicant is responsible for accommodating ground and rooftop mechanical elements and screening them from the public right-of-way.

<u>Findings for rear accessory structure:</u>

r. SETBACKS & ORIENTATION – According to the Historic Design Guidelines, new garages should follow the predominant garage orientation found along the block. Do not introduce front-loaded garages or garages attached to the primary structure on blocks where rear or alley-loaded garages were historically used. Additionally, historic setbacks should be followed. Staff finds the proposed orientation and setbacks consistent with those found historically on the block.
s. SCALE & MASSING – According to the Historic Design Guidelines, new garages and outbuildings to be visually subordinate to the principal historic structure in terms of their height, massing, and form. Based on the submitted elevations, the proposed rear accessory structure will be slightly shorter than the new primary structure. This primary-accessory structure relationship exists on this portion of W Lullwood. Staff finds that the proposed structure is generally appropriate.
t. ROOF FORM – The proposed structure features a side gable configuration with a front gable and additional 1-story side gable that projects slightly. Staff finds that the roof form is generally appropriate.
u. WINDOW & DOOR OPENINGS – The applicant has proposed to install several windows on the proposed structure that are consistent with the Guidelines. Staff finds the window sizes and locations to be appropriate, but as noted in finding n, the applicant has proposed to incorporate stucco trim surrounding the windows and doors. Staff does not find this to be appropriate or consistent with the pattern in the district. Staff finds that the applicant should incorporate traditional wood window trim and sill detailing.
v. GARAGE DOORS – The proposed accessory structure will feature a 3-story garage on the first floor fronting the rear alley. The applicant has proposed to install three individual overhead garage doors. Staff finds this to be appropriate.
w. MATERIALS – The applicant has proposed materials that include a stucco siding finish, a composition shingle roof, and aluminum-clad wood windows. Generally, staff finds these materials appropriate.
x. ARCHITECTURAL DETAILS – New rear accessory structures should relate to the principal structure with simplified architectural details and complementary materials. Staff finds that the overall approach to the rear accessory structure is a design that relates to the primary structure but is simplified in its detailing, which is

appropriate.

Findings for site elements:

y. WALL MODIFICATIONS – The applicant has proposed to modify an existing stone wall. The wall currently spans the front property line and part of the side lot lines. The applicant has proposed to cut a five foot opening on the front portion of the wall to incorporate a new concrete walkway. The proposal includes reusing the stone to create a 3'-0" long return on either side to accommodate a new wrought iron gate. The proposal retains a significant feature while accommodating accessibility to the property. Staff finds the proposal generally consistent with the Guidelines.

z. FRONT WALKWAY – The applicant has proposed to install a salt finish concrete walkway and stairs. The walkway will be 5 feet in width. Staff finds concrete walkways to be common in the district and finds the proposal appropriate.

aa. HARDSCAPING – The applicant has proposed to incorporate a covered walkway in the rear of the lot and a concrete porch. Based on the submitting lot coverage calculations, the total coverage of the lot, including buildings and hardscaping, will be less than 50 percent. As noted in finding e, there is also historic precedent on adjacent lots to exceed this percentage. Staff finds the proposed hardscaping, which is concentrated towards the rear of the lot, appropriate given these site and district specific considerations.

bb. LANDSCAPING – The applicant has proposed to retain several existing trees on the site per the indicated site plan and remove others. The applicant is required to coordinate with the City Arborist's office to ensure the proposed new construction will not impact any significant or heritage trees. The applicant has also provided a comprehensive landscaping plan that is consistent with the Guidelines.

RECOMMENDATION:

Staff recommends final approval based on findings a through bb with the following stipulations:

i. That the applicant reincorporates an exterior chimney that is flush with the exterior façade as noted in finding o. The applicant is required to submit updated drawings to staff for review and approval.

ii. That the applicant incorporates a one over one window on the western portion of the first floor front façade of the primary structure as noted in finding l.

iii. That the applicant adds traditional wood or hardi trim and sill detailing around the windows on both the primary and accessory structure in lieu of the proposed stucco treatment as noted in findings n and u. The trim should create a true ganged condition for paired windows. The applicant is required to submit updated drawings to staff for review and approval.

iv. That the selected windows feature a one over one configuration and do not contain divided lites. Meeting rails must be no taller than 1.25" and stiles no wider than 2.25". White manufacturer's color is not allowed, and color selection must be presented to staff. There should be a minimum of two inches in depth between the front face of the window trim and the front face of the top window sash. This must be accomplished by recessing the window sufficiently within the opening or with the installation of additional window trim to add thickness. Window trim must feature traditional dimensions and architecturally appropriate sill detail. Window track components must be painted to match the window trim or concealed by a wood window screen set within the opening.

CASE MANAGER:

Stephanie Phillips

CASE COMMENTS:

The applicant met with the Design Review Committee (DRC) on February 27 and March 27, 2018, prior to receiving conceptual approval from the HDRC. The discussions and overall case history are outlined in finding c.

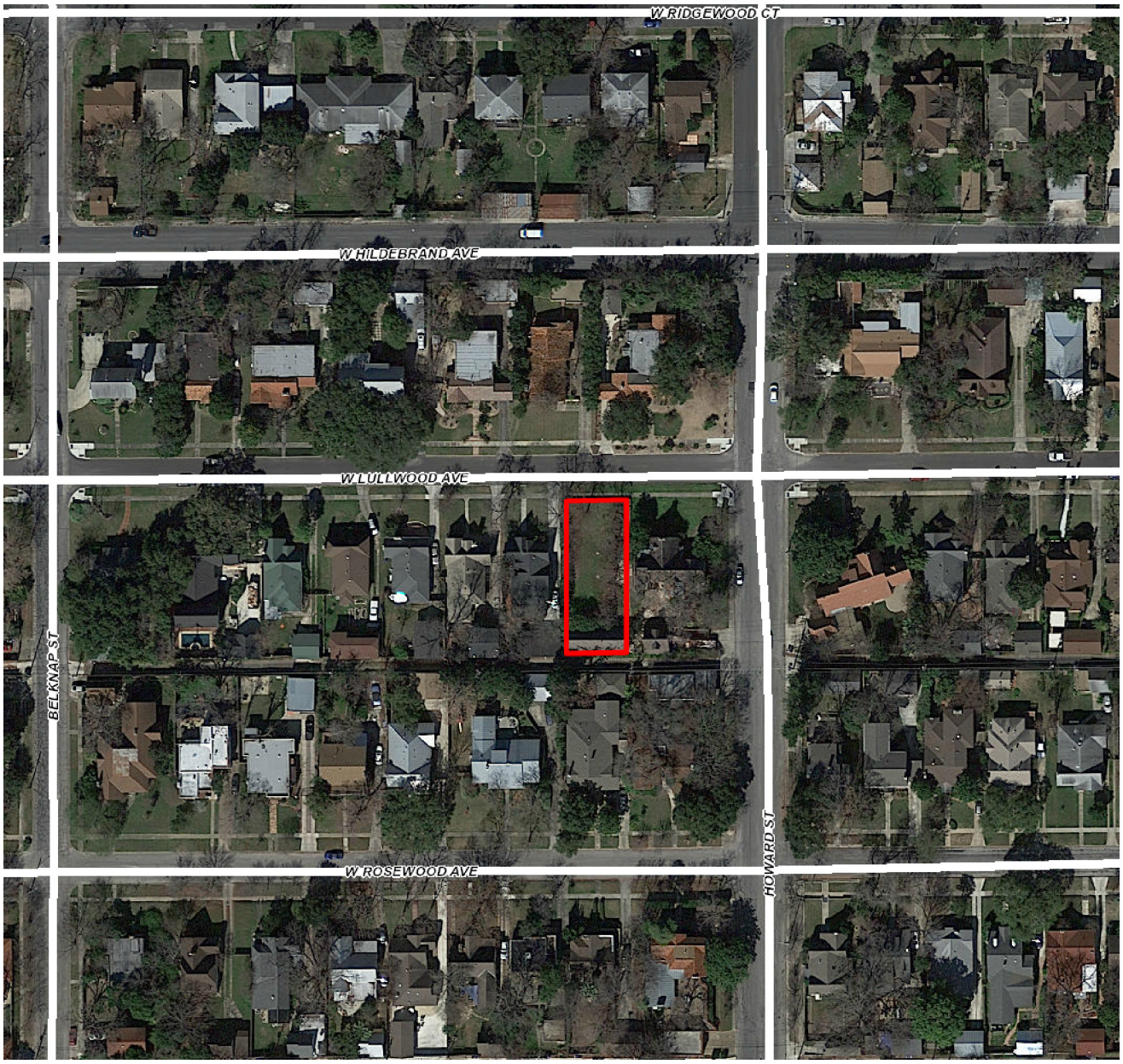

N

Flex Viewer

Powered by ArcGIS Server

Printed:Mar 19, 2018


See Volume Five
See Volume Two
SAN ANTONIO, TEX. VOL. I
107
NEW SHEET
MAR. '924
E. HILDEBRAND AV.
E. LULLWOOD AV. (BLVD.)
E. ROSEWOOD AV. (BLVD.)
E. HOLLYWOOD AV.
E. LYNWOOD AV. (BLVD.)
E. ELSMERE PL.
MC CULLOUGH AV.
HOWARD
W. HILDEBRAND
W. LULLWOOD
W. ROSEWOOD
W. HOLLYWOOD
W. LINWOOD
W. ELSMERE
BELKNAP PL.
SAN PEDRO AV.
VOLUME FIVE
6535
6534 (2A)
6536 (3A)
6533 (4A)
6532 (4A)
6537 (5A)
6388
6387
6386
6385
6384
3969
3970
3966
3967
6460
Scale 100 Ft to One Inch
Copyright 1924 by the Sanborn Map Co.
104
110

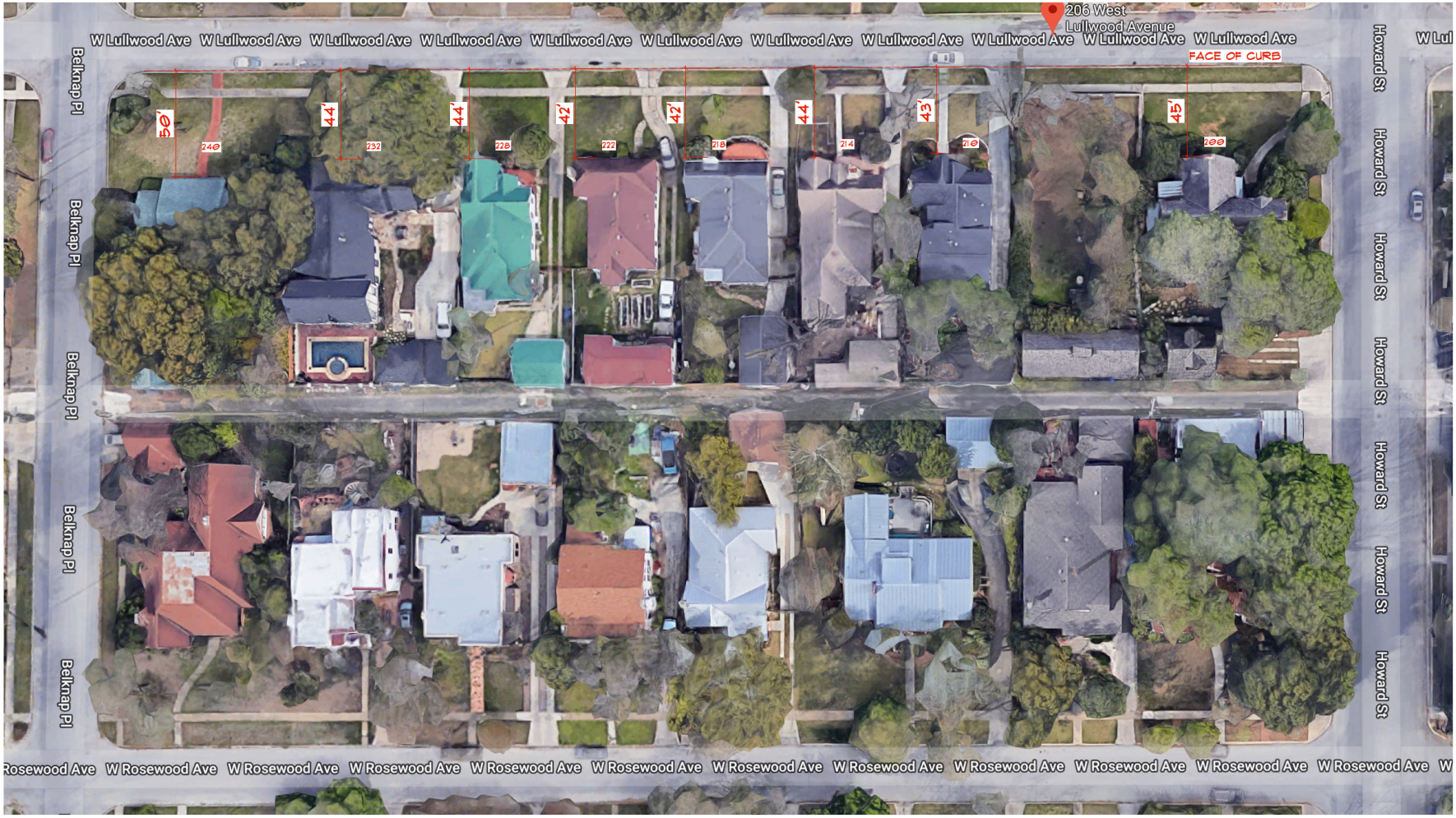

200 BLOCK WEST LULLWOOD - ENLARGED GOOGLE SCREEN SHOT SHOWING APPROXIMATE HOUSE SETBACKS TO FACE OF CURB

NOT TO SCALE

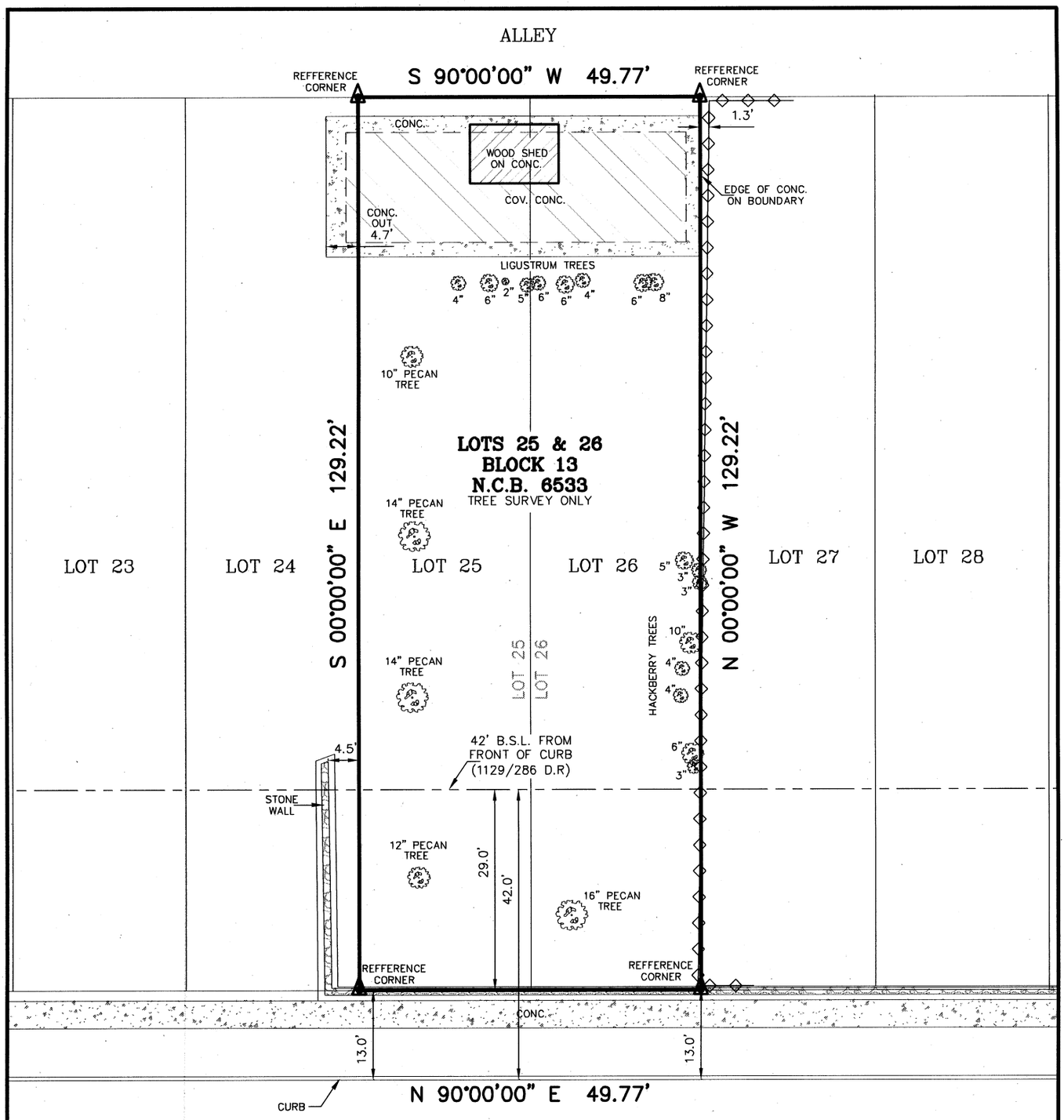

W. LULLWOOD

(50' R.O.W., ASPHALT PAVEMENT)
(PLATTED AS: LULLWOOD AVENUE)

TREE LIST

(1) 16" PECAN TREE
(2) 14" PECAN TREES
(1) 12" PECAN TREE
(1) 10" PECAN TREE
(1) 8" LIGUSTRUM TREE
(4) 6" LIGUSTRUM TREES
(1) 5" LIGUSTRUM TREE
(2) 4" LIGUSTRUM TREES
(1) 2" LIGUSTRUM TREE
(1) 10" HACKBERRY TREE
(1) 6" HACKBERRY TREE
(1) 5" HACKBERRY TREE
(2) 4" HACKBERRY TREES
(3) 3" HACKBERRY TREES

1" = 20'
GRAPHIC SCALE
0 10 20

NOTE: TREE SPECIES NEED BE VARIFIED BY A CERTIFIED ARBORIST.

NOTE: THIS SURVEY WAS DONE WITHOUT THE BENEFIT OF A CURRENT TITLE REPORT. CONFLICTS IN TITLE, EASEMENTS OR SETBACKS ARE NOT CERTIFIED HEREON. FIELD CONDITIONS ARE AS SHOWN.

OWNER: ~	ADDRESS: 206 W. LULLWOOD	
TITLE COMPANY: ~	G.F. NO.: ~	
LOT: 24 AND 25	BLOCK: 13	N.C.B: 6533
SUBDIVISION: GREENWOOD VILLAGE MONTE VISTA		
CITY: SAN ANTONIO	COUNTY: BEXAR	STATE: TEXAS
PLAT RECORDED IN: VOLUME 642 PAGE 284	DEED AND PLAT RECORDS OF BEXAR COUNTY, TEXAS	

LEGEND:

= WOOD FENCE	= POWER POLE
= CHAIN LINK FENCE	= FIRE HYDRANT
= BARBED WIRE FENCE	= FND ½" IRON ROD
= WROUGHT IRON FENCE	= SET ½" IR
= FND FENCE POST	= SET "X" ON CONC.

RESTRICTIVE COVENANTS AS SHOWN ON SCHEDULE (B), ITEM 1 OF THE REFERENCED TITLE COMMITMENT: REFER TO TITLE COMMITMENT FOR ADDITIONAL ITEMS.

VOLUME ~ PAGE ~ DEED RECORDS OF BEXAR COUNTY, TEXAS — VOLUME ~ PAGE ~ REAL PROPERTY RECORDS OF BEXAR COUNTY, TEXAS
VOLUME ~ PAGE ~ DEED RECORDS OF BEXAR COUNTY, TEXAS — VOLUME ~ PAGE ~ REAL PROPERTY RECORDS OF BEXAR COUNTY, TEXAS

33 YEARS OF EXPERIENCE
SOUTHCENTRAL SURVEYORS
IN SOUTH TEXAS
P.O. BOX 200044
SAN ANTONIO, TX 78220
PHONE: 210-534-6700
TEXAS FIRM NO. 10140300

GENERAL SURVEY NOTES

1. UTILITY INSTALLATIONS, UNDERGROUND IMPROVEMENTS, FOUNDATIONS AND\OR OTHER UNDERGROUND ITEMS OR EASEMENTS ARE NOT LOCATED BY THIS SURVEY.

2. THIS SURVEY IS PREPARED FOR THE EXCLUSIVE USE AND BENEFIT OF THE PARTIES LISTED HEREON. LIABILITY TO THIRD PARTIES MAY NOT BE TRANSFERRED OR ASSIGNED.

3. ADJACENT PROPERTY INFO FOR REFERENCE USE ONLY.

TREE SURVEY

DRAWN BY: G.F. | JOB NO: 17-0169-001 | FIELD WORK COMP.: NOVEMBER 10, 2017

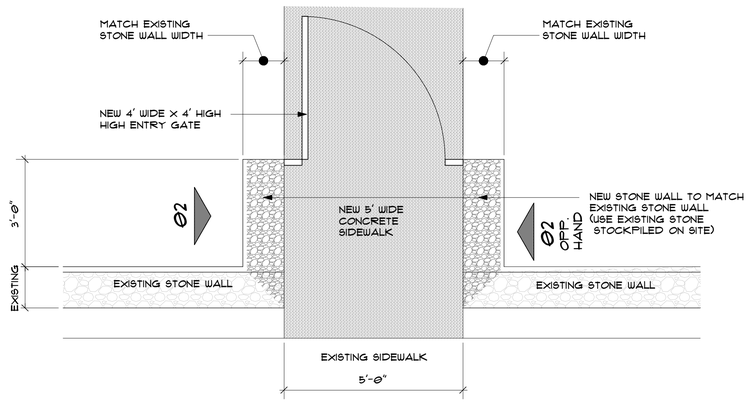

01 PARTIAL PLAN AT PROPOSED ENTRY GATE
SCALE: 1/2" = 1'-0"

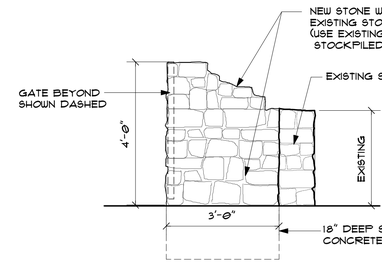

02 SIDE ELEVATION
SCALE: 1/2" = 1'-0"

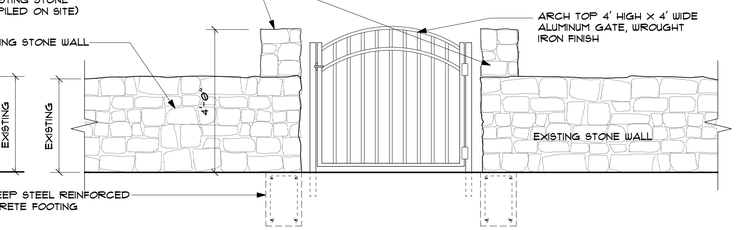

STREET ELEVATION AT PROPOSED ENTRY GATE
SCALE: 1/2" = 1'-0"

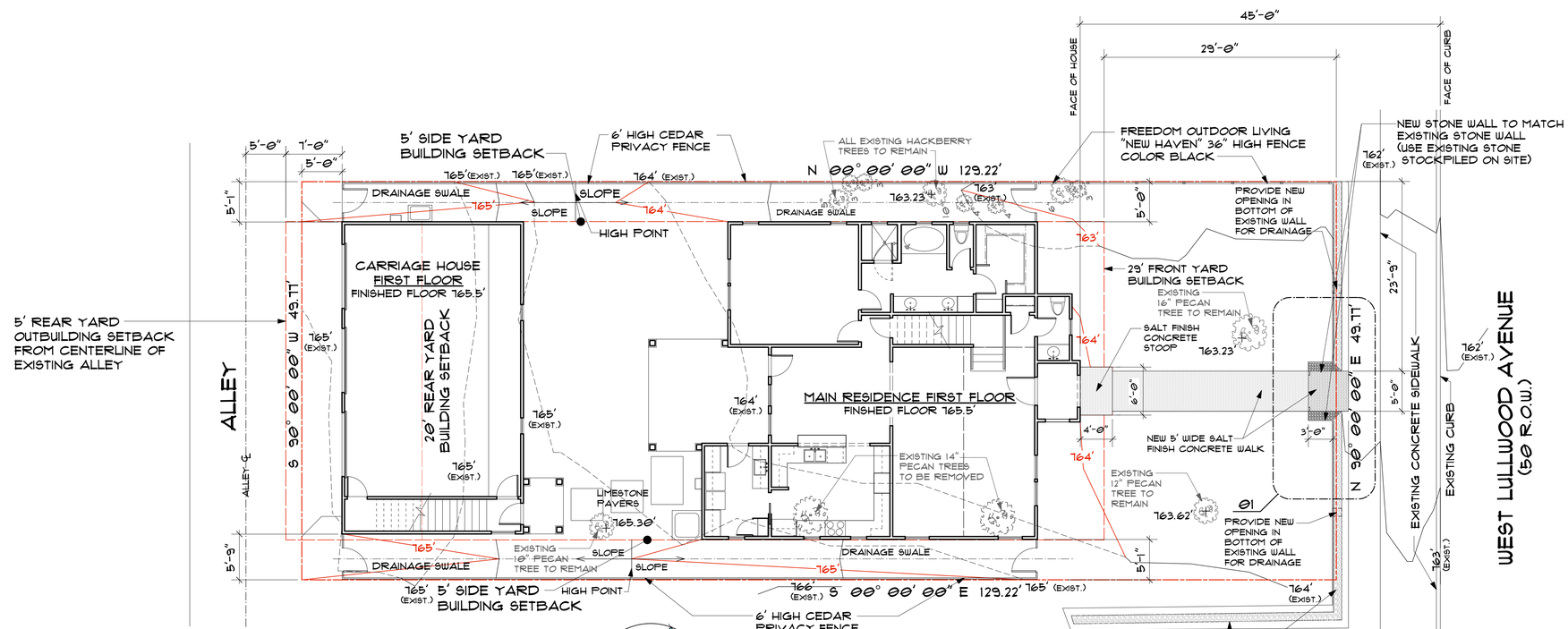

SITE PLAN
SCALE: 1/8" = 1'-0"

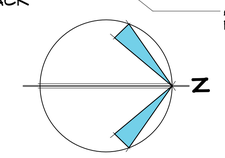

LEGAL DESCRIPTION
LOTS 25 & 26, BLOCK 13, NCB 6535
PLAT RECORDED IN VOLUME 642, PAGE 284
GREENWOOD VILLAGE SUBDIVION, MONTE VISTA,
BEXAR COUNTY, TEXAS

BUILDING TO LOT RATIO

EXISTING LOT SIZE	6,432 S.F
MAXIMUM BUILDING COVERGE	50%
BUILDING LOT COVERAGE	2,706 S.F. / 6,432 S.F. = 42%

P·E·C
A·I·A
PECAIA, Inc.
159 Cave Lane, San Antonio, Texas 78209
phone 210.783.9823
pac@pecaia.com

REGISTERED ARCHITECT PAUL E. CASSEE, JR. 13929 STATE OF TEXAS

EXPIRES: 10.31.2018

A NEW CUSTOM RESIDENCE FOR LINDSEY / SABATINO

206 West Lullwood Ave., San Antonio Texas 78212

Revisions

No.	ISSUE	DATE

SUBMITTAL DRAWINGS FOR HDRC FINAL APPROVAL

Drawing Information

Project No.	Date	Scale
2017.1501	08.24.18	

Drawing No.

A-1.01

lindsey / sabatino residence: Plant list / legend			206 west lullwood, san antonio, texas 78212	
trees/palms				
abv/legend	**quantity**	**plant variety**	**size**	**comments / notes**
mo	1	monterry oak	45 gal.	large semi-evegereen oak wilt resistant shade tree w/ large leaves
ao	1	anacacho orchid	30 gal.	small/medium 12' h x 10' w ornamental/understory native w/orchid like white blooms
rb	1	texas or mexican redbud	15 gal.	small/medium 20' h x 20' w deciduous understory tree w/pink spring blooms
ml	1	mountain laurel	30 gal./ 3' - 4' tall	native evergreen tree w/glossy green foliage w/fragrant purple spring blooms
shrubs / accents / vines /ornamental grasses				
ros	4	rosemary	3-5 gal.	medium evergreen herb / shrub w/ fragrant green foliage w/ little blue blooms
vib	3	viburnum	3-5 gal.	medium size accent or screen evergreen shrub
lmg	0	lindheimer muhley grass	3-5 gal.	medium size upright ornamental accent grass w/ tan plumes
bi	4	butterfly / bi-color iris	3-5 gal.	grass like foliage w/ yellow summer blooms
sg	6	salvia greggi; pink	3-5 gal.	perennial with fragrant foliage; blooms all summer
total 3 - 5 gal.	17			
perennials, ground cover, and borders				
mfg	0	mexican feather grass	1 gal.	dwarf ornamental accent grass
tc	2	turks cap	1 gal.	native perennial for shady areas; red blooms
sis	4	salvia indigo spire	1 gal.	native shrub like perennial; blooms purple spring thru summer
sf	3	salvia farnacea	1 gal.	native tall perennial; blooms purple spring thru summer
zex	3	zexmenia	1 gal.	native foreground perennial; blooms yellow spring thru summer
rr	9	pavonia (rockrose)	1 gal.	native perennial; blooms pink spring thru summer
total 1 gal.	21			
lawn	2600 sq. ft.	zeon zoysia / 450 sq. ft. pallet	6 pallets	fine bladed grass great for turf grass lawn with moving optional
notes	confirm all quantities on this list with plan/quantities on landscape plan. this list is what is estimated and list prevails. after plan, substitute and layout as needed in field			

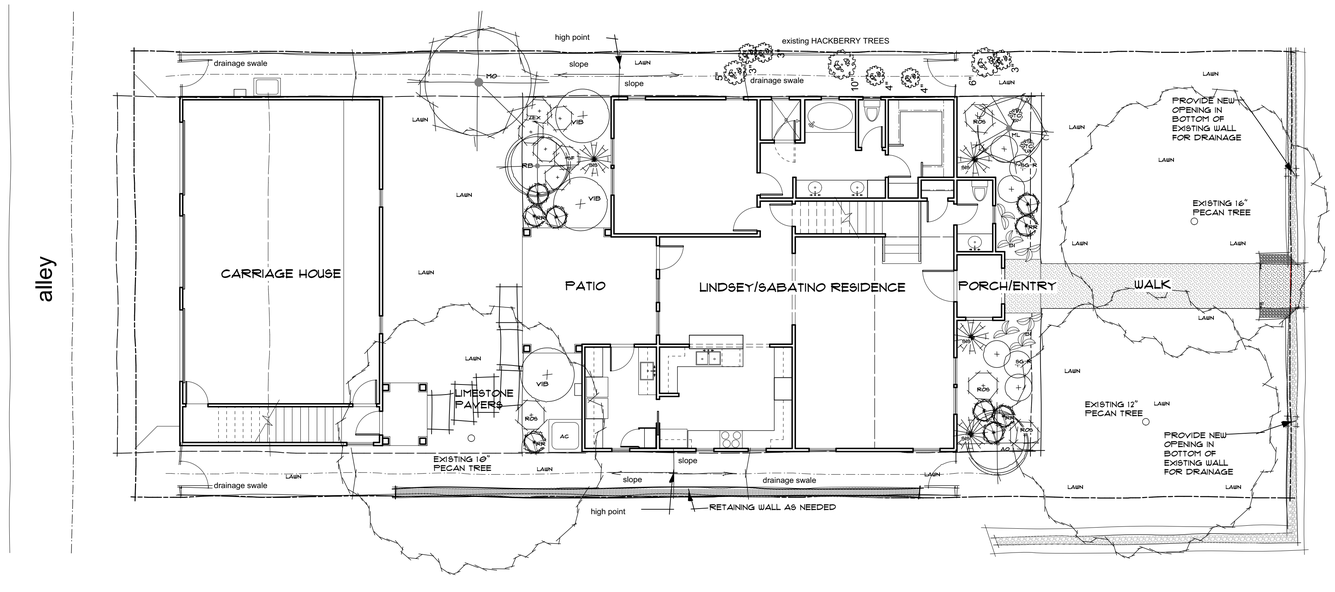

LANDSCAPE PLAN
SCALE: 1/8" = 1'-0"

N

NORTH NOTES:

POOL AND/OR LANDSCAPE DESIGN FOR:
THE LINDSEY/SABATINO RESIDENCE
206 WEST LULLWOOD, SAN ANTONO, TEXAS 78212

MASTER PLAN
SCALE: 1/8" = 1'-0"
DATE: 1/24/18
DRAWN BY: MJL
DESIGN BY: MJL
PLOT # 4
CHECK BY: MJL

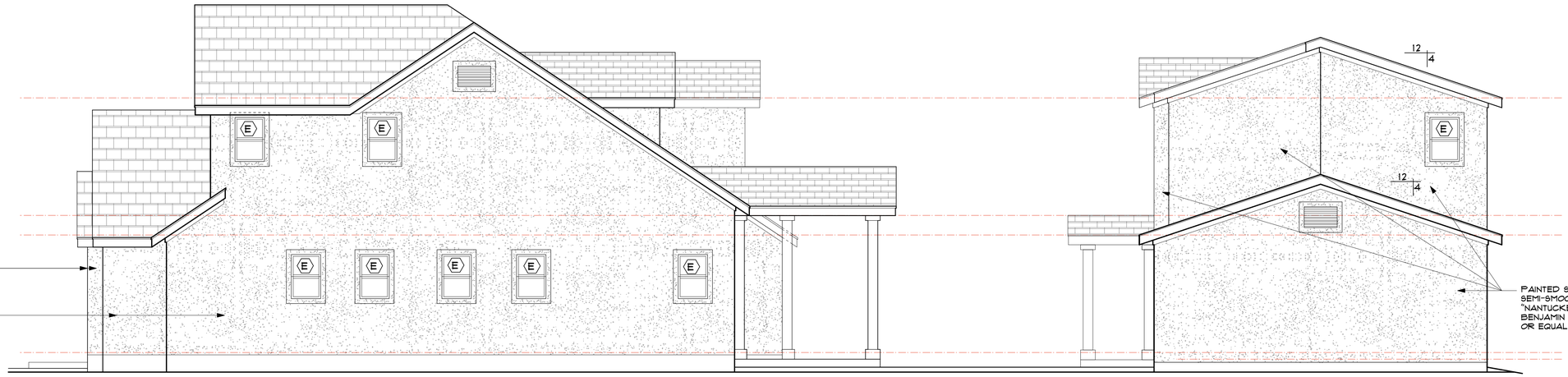

RIGHT SIDE ELEVATION
SCALE: 1/4" = 1'-0"

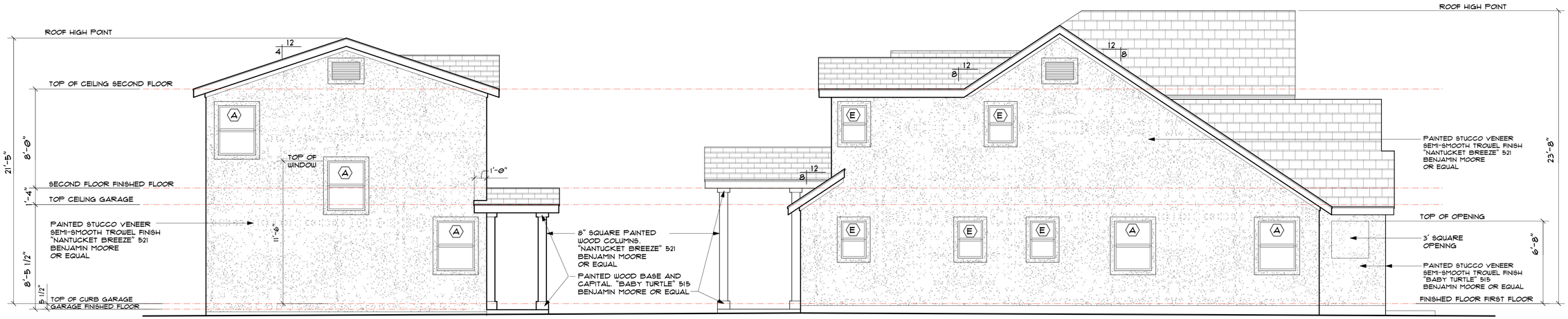

LEFT SIDE ELEVATION
SCALE: 1/4" = 1'-0"

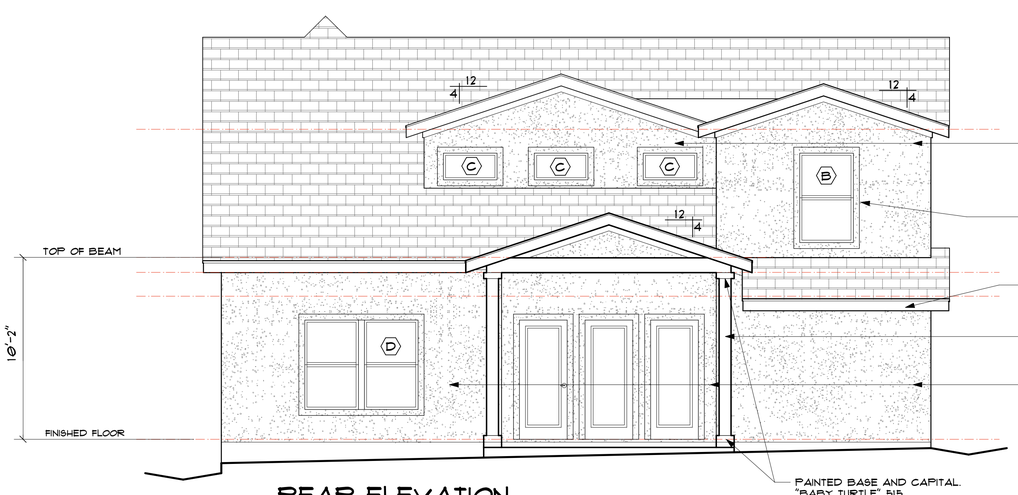

REAR ELEVATION
SCALE: 1/4" = 1'-0"

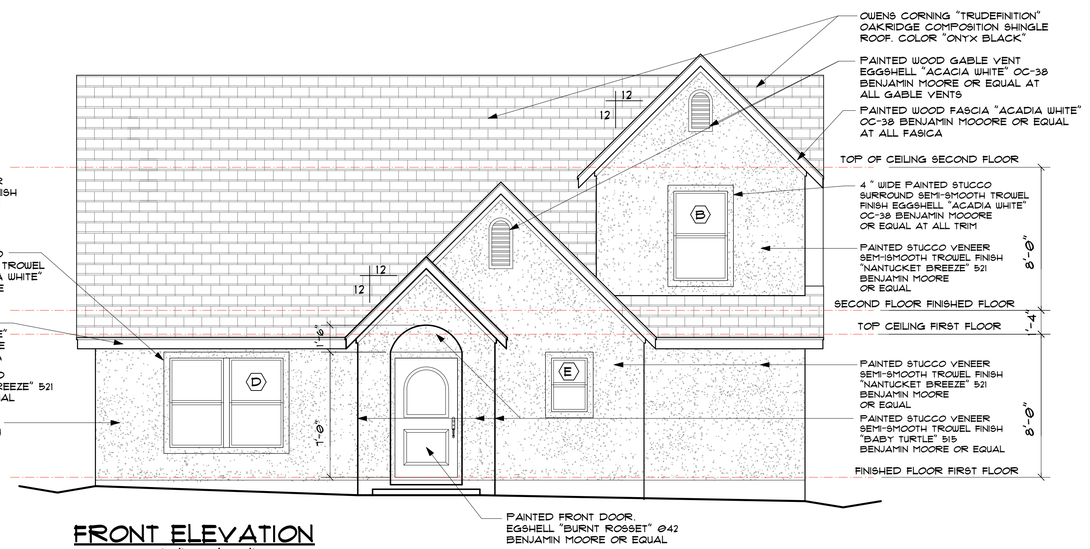

FRONT ELEVATION
SCALE: 1/4" = 1'-0"

P·E·C
A·I·A

PECAIA, Inc.
159 Case Lane, San Antonio, Texas 78209
phone 210.785.9823
paul@pecaia.com

REGISTERED ARCHITECT
PAUL E. CASSETO JR.
13939
STATE OF TEXAS

EXPIRES: 10.31.2018

A NEW CUSTOM RESIDENCE
FOR
LINDSEY / SABATINO
206 West Lullwood Ave., San Antonio Texas 78212

Revisions

No.	ISSUE	DATE

SUBMITTAL DRAWINGS
FOR HDRC
FINAL APPROVAL

Drawing Information

Project No.	Date	Scale
2017.1501	08.24.18	

Drawing No.

A-4.01

WINDOW DETAILS
SCALE: 1 1/2" = 1'-0"

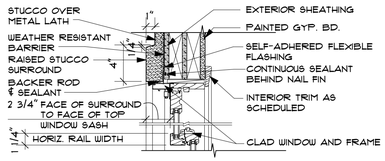

01 HEAD AT CLAD WINDOW

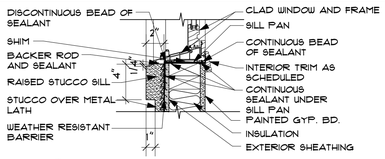

02 SILL AT CLAD WINDOW

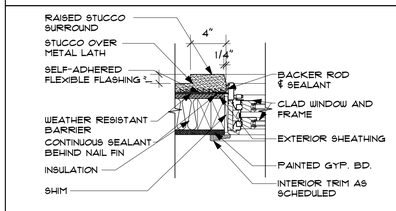

03 JAMB AT CLAD WINDOW

DOOR DETAILS
SCALE: 1 1/2" = 1'-0"

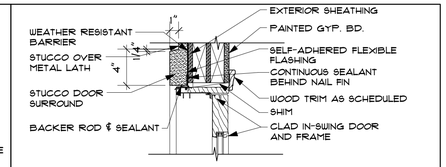

04 HEAD AT CLAD IN-SWING DOOR

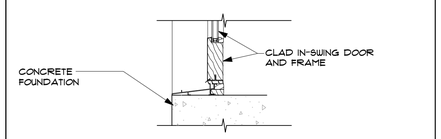

05 SILL AT CLAD IN-SWING DOOR

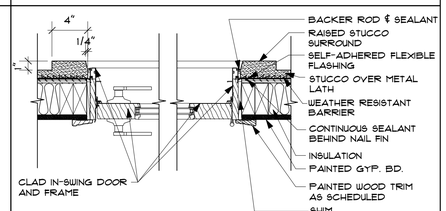

06 JAMB AT CLAD IN-SWING DOOR

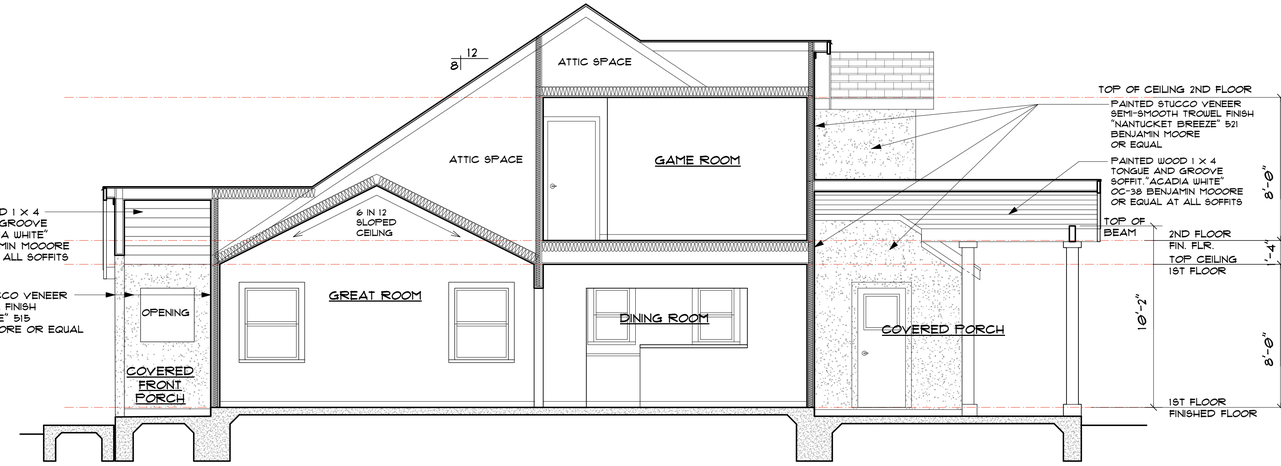

01 THRU-BUILDING SECTION
SCALE: 1/4" = 1'-0"

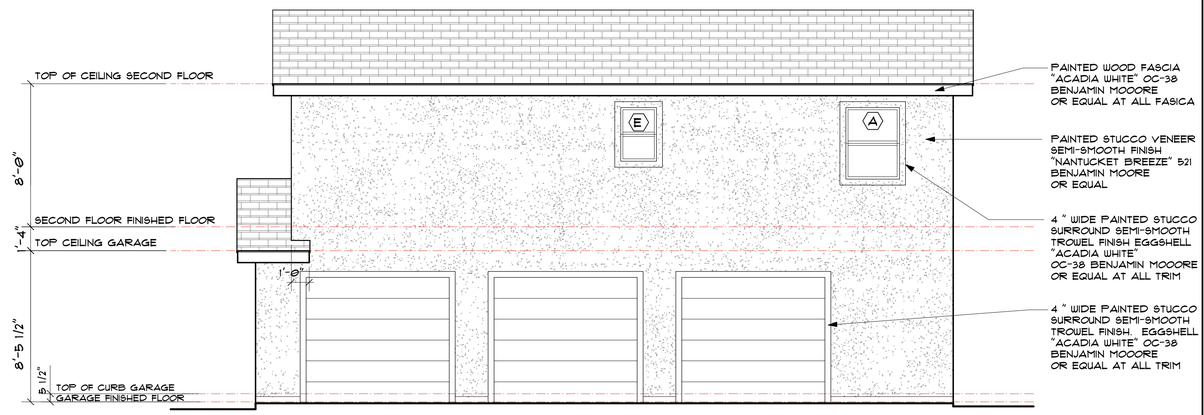

REAR ELEVATION AT CARRIAGE HOUSE
SCALE: 1/4" = 1'-0"

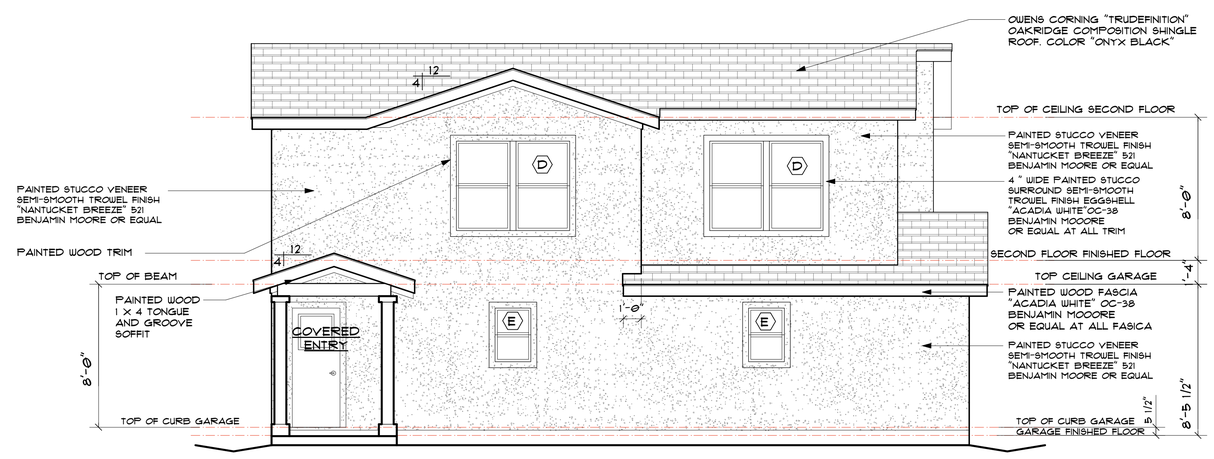

FRONT ELEVATION AT CARRIAGE HOUSE
SCALE: 1/4" = 1'-0"

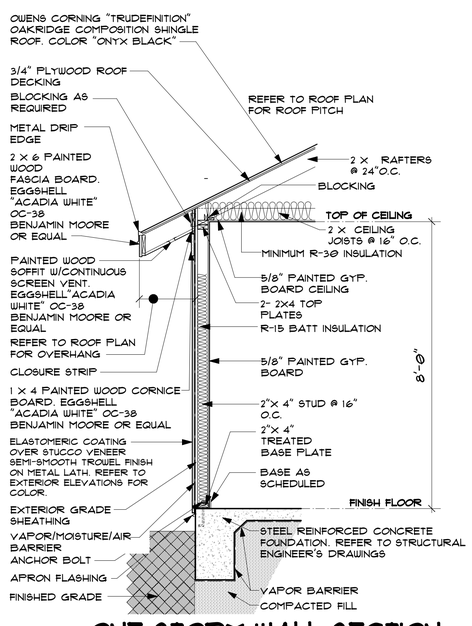

ONE STORY WALL SECTION
SCALE: 1/2" = 1'-0"

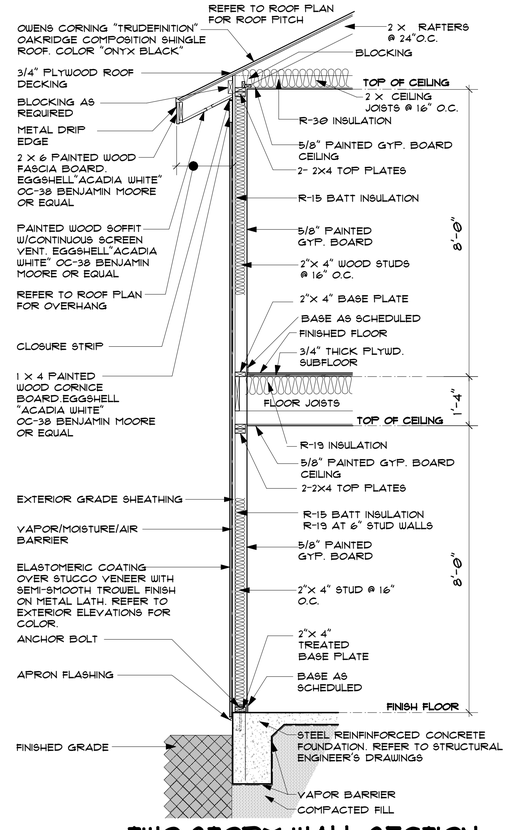

TWO STORY WALL SECTION
SCALE: 1/2" = 1'-0"

P · E · C
A · I · A
PECAIA, Inc.
159 Case Lane, San Antonio, Texas 78209
phone 210.785.9823
paul@pecaia.com

REGISTERED ARCHITECT PAUL E. CASSETO JR. 13929 STATE OF TEXAS

EXPIRES: 10.31.2018

A NEW CUSTOM RESIDENCE
FOR
LINDSEY / SABATINO
206 West Lullwood Ave., San Antonio Texas 78212

Revisions

No.	ISSUE	DATE

SUBMITTAL DRAWINGS FOR HDRC FINAL APPROVAL

Drawing Information

Project No.	Date	Scale
2017.1501	08.24.18	

Drawing No.

A-4.02

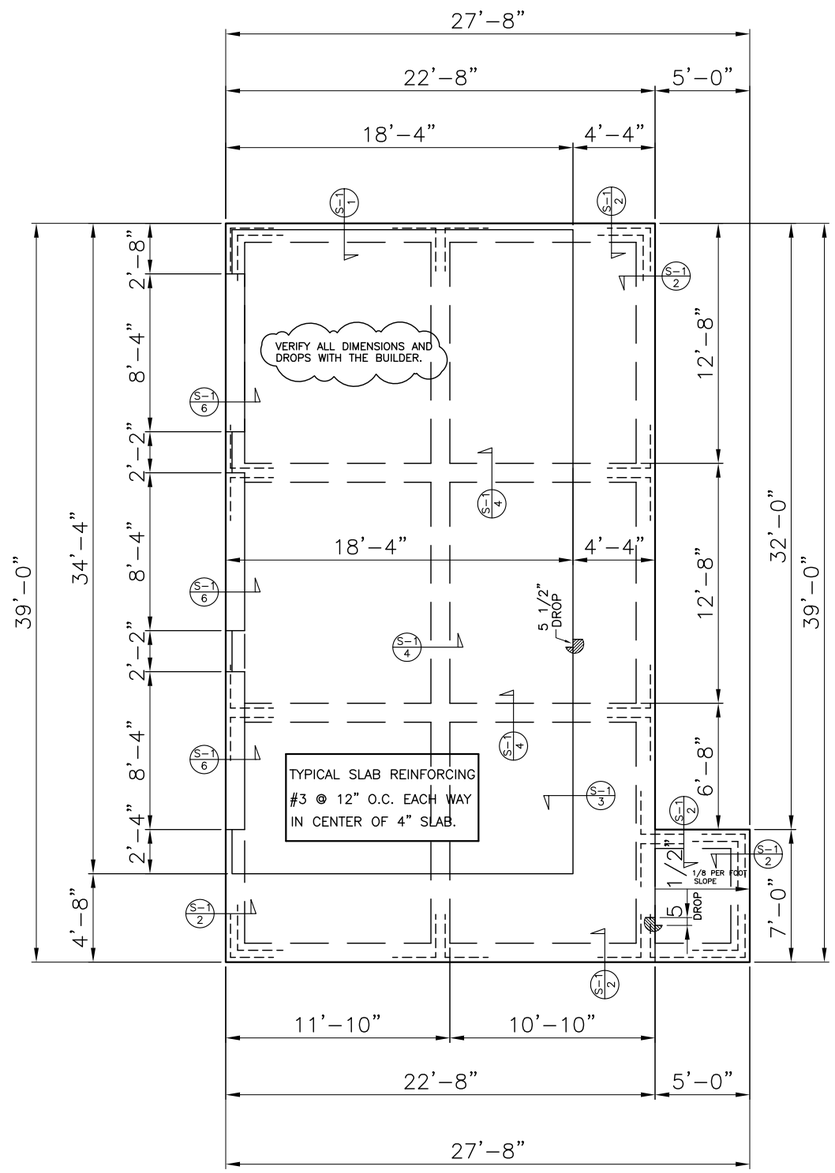

DETACHED GARAGE PLAN

SCALE: 1/8"=1'-0"

BEAM SCHEDULE				
BEAM WIDTH "W"	EXTERIOR BEAM DEPTH "D"	INTERIOR BEAM DEPTH "D"	EXT. BEAM INTO UNDISTURBED SOIL	INT. BEAM INTO UNDISTURBED SOIL
12"	36"	36"	24"	12"
2 – #6 TOP & BOTTOM BM. REINF. WITH #3 STIRRUP @ 16" O.C.				

REINF. BAR	
SIZE	SPLICE
#3	15
#4	20
#5	26
#6	31
#7	36
#8	42

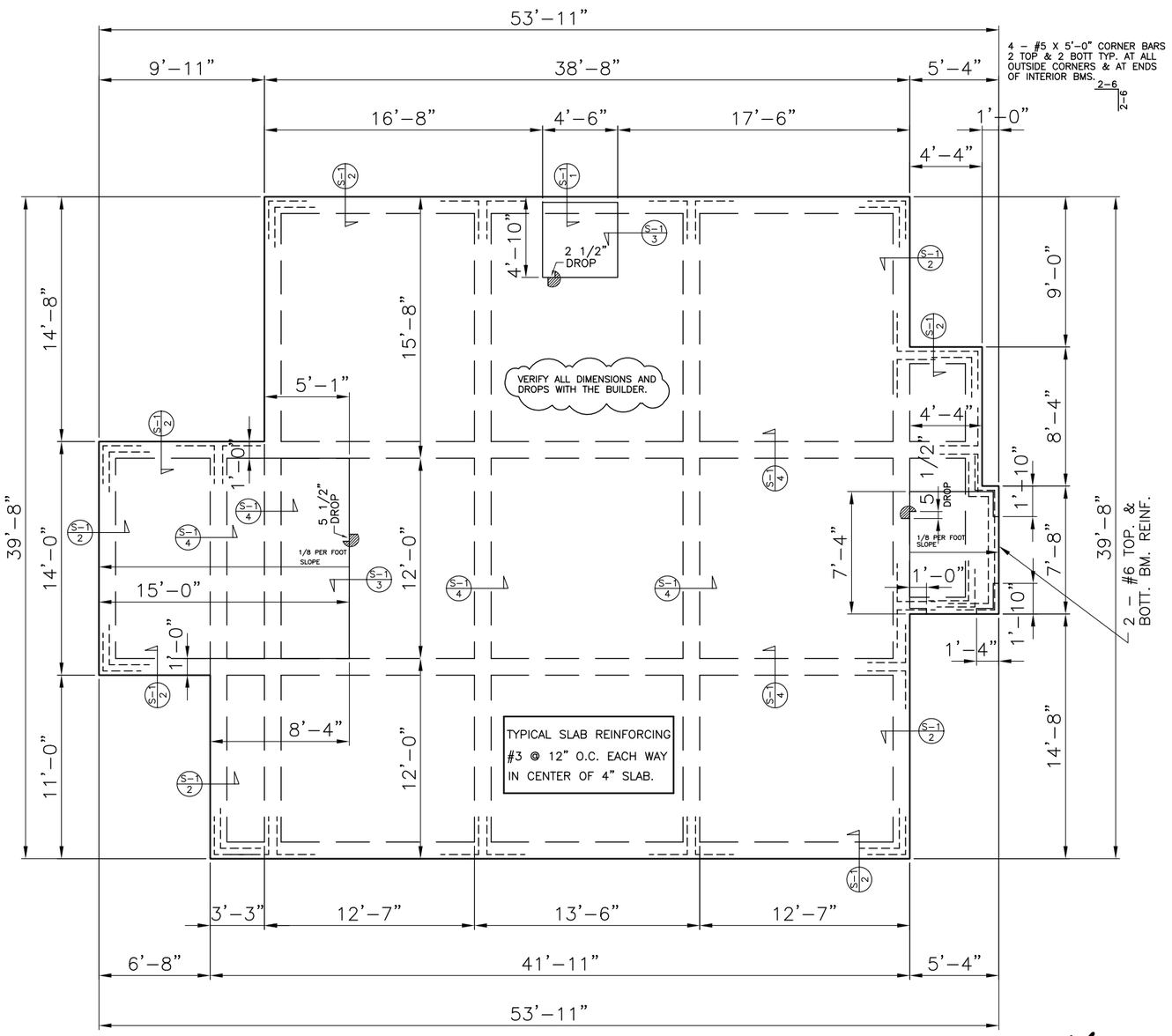

FOUNDATION PLAN

SCALE: 1/8"=1'-0"

STATE OF TEXAS
AMIR H. SHEKARCHI
61640
LICENSED
PROFESSIONAL ENGINEER

05-31-18

FIRM REGISTRATION NO. F-1586

SA Engineering Company
Consulting Engineers
(210) 561-0808 FAX: (210) 561-0844
12719 Spectrum Dr., San Antonio, Texas 78249

LINDSEY/SABATINO RESIDENCE

206 WEST LULLWOOD AVE., SAN ANTONIO, TEXAS

REVISIONS

JOB NO. 18PX-010

DATE 05-31-18

GARAGE 919 SQFT.
HOUSE 1785 SQFT.
TOTAL 2704 SQFT.

SHEET S-2 OF 2

LEGEND:

EXTERIOR AND INTERIOR

BWP1 / S-1 LET-IN BRACE (LIB)

1 / S-2 SIMPSON STRONG WALL

ABWP1 / S-2, ABWP2 / S-2 ALTERNATE BRACED WALL (7/16" OSB) OR ZIPPED SYSTEM

(TPR) THERMO-PLY RED STRUCTURAL

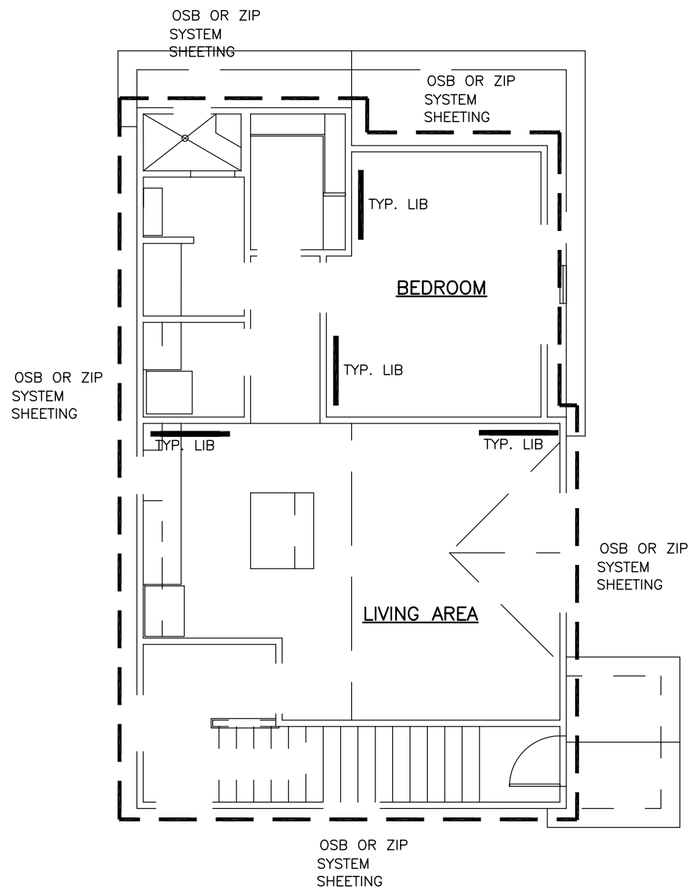

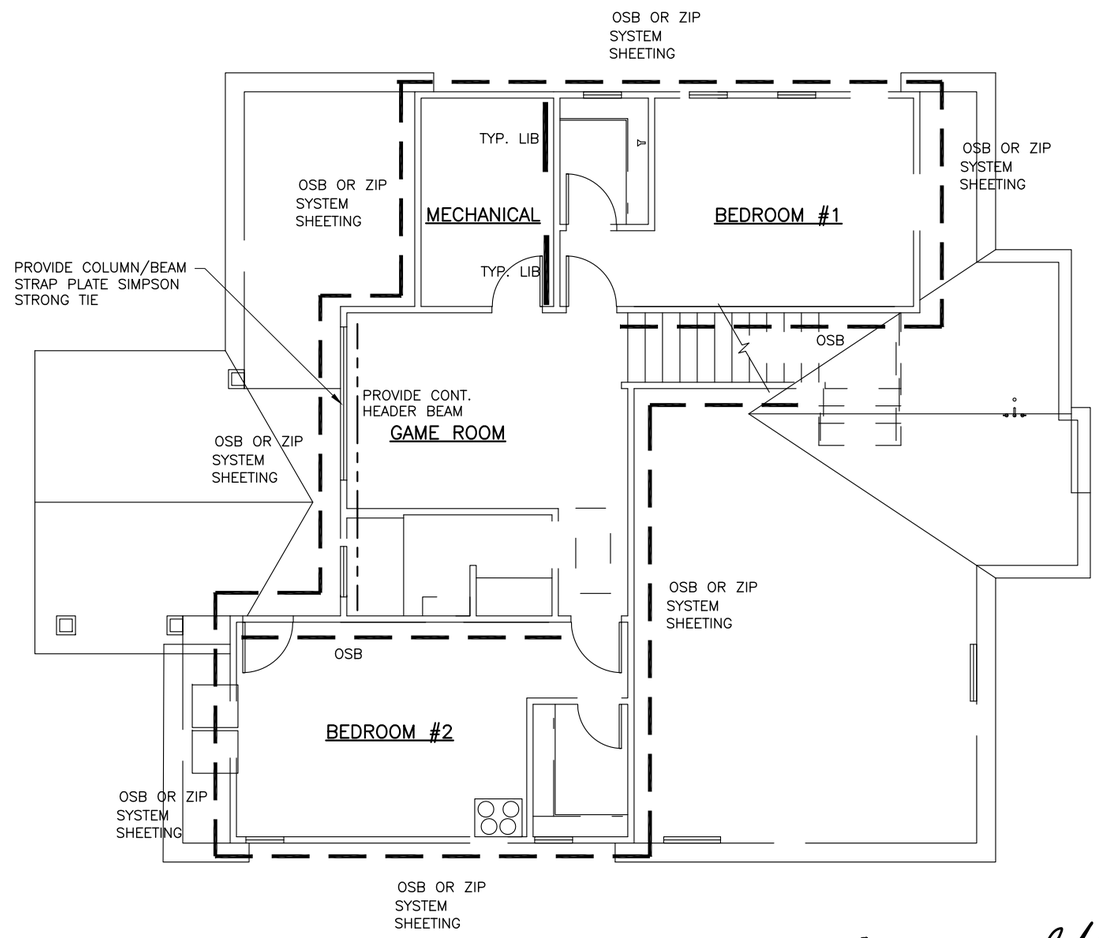

GENERAL NOTES:

1. THE DESIGN IS BASED ON WIND SPEED 90 MPH, AND EXPOSURE-B.
2. PROVIDE 2 - HTHD14 SIMPSON STRONG TIE AT EACH SIDE OF GARAGE DOOR OPENING, UNLESS OTHERWISE SHOWN ON PLAN.
3. THE BEAM OVER GARAGE DOOR OPENINGS SHALL BE CONTINUOUS FROM OUT - TO-OUT UNLESS OTHERWISE SHOWN ON PLAN.
4. PROVIDE MSTC STRAPS (40,52,66 OR 78) TO MAINTAIN MINIMUM OF 12" OVERLAP AT BEAM AND STUD WALLS, PROVIDE MINIMUM OF 3 STRAPS AT BRASED WALL PANELS.
5. LIB IS SHOWN ON PLAN IS APPROXIMATE LOCATION. THE LOCATION MAY VARY 3' ALONG THE SAME BRACE LINE(WBL).
6. THIS PLAN IS ONLY DESIGNED TO PROVIDE SHEAR WALLS. THE CONTRACTOR IS RESPONSIBLE TO PROVIDE ADEQUATE STRUCTURAL MEMBERS AS REQUIRED BY BUILDING CODES ENFORCEMENT.
7. PROVIDE SIMPSON STRONG TIE H2.5A AT EVERY OTHER ROOF JOIST OR TRUSS, AND THE FLOOR JOIST, BEARING AT EXTERIORS WALLS.

NOTE: FASTENER SPACING FOR ZIP SYSTEM SHALL BE THE SAME AS OSB SHEETING.

SECOND FLOOR PLAN

Scale: N.T.S.

WIND BRACING PLAN

Scale: N.T.S.

STATE OF TEXAS
AMIR H. SHEKARCHI
61640
LICENSED
PROFESSIONAL ENGINEER

06-06-18

FIRM REGISTRATION NO. F-1586

SA Engineering Company
Consulting Engineers
(210) 561-0808
12719 Spectrum Dr., San Antonio, Texas 78249
FAX: (210) 561-0844

LINDSEY/SABATINO RESIDENCE

206 WEST LULLWOOD AVE., SAN ANTONIO, TEXAS

REVISIONS

JOB NO. 18PX-010

DATE 05-31-18

SHEET S-4 OF 4

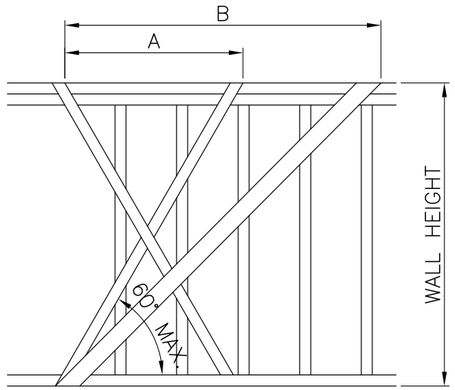

1. BRACING MAY ALSO BE PLACED AT ANY ANGLE BETWEEN 45° AND 60°.
2. BRACING MUST BE CONTINUOUS FROM BOTTOM OF TOP PLATE.
3. 1X4 LET–IN, METAL LET–IN, OR METAL STRAPS MAY BE USED INTERCHANGEABLY FOR WALL HEIGHTS UP TO 10" W/STUDS SPACED @ 16" O.C.

WALL HEIGHT	METAL LET – IN	METAL "X" STRAPS
8'	TWB10 @ 55'	TWB106C @ 60'
9'	TWB12 @ 53'	TWB126C @ 53'
10'	TWB14 @ 45'	TWB143C @ 45'
11'	USE 1X4 LET – IN ONLY	
12'	USE 1X4 LET – IN ONLY	

WALL HEIGHT	A HORIZ. DISTANCE REQ'D @ 60'	B HORIZ. DISTANCE REQ'D @ 60'
8'	4' – 8"	8' – 0"
9'	5' – 3"	9' – 0"
10'	5' – 10"	10' – 0"
11'	6' – 5"	11' – 0"
12'	7' – 0"	12' – 0"

BWP1

DIAGONAL LET-IN WALL ASSEMBLIES

BRACED WALL PANEL

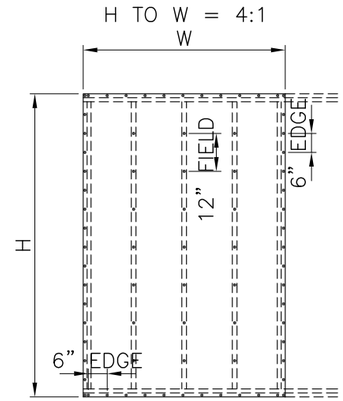

1. WHERE PANELS ARE APPLIED ON BOTH FACES OF WALL, AND NAIL SPACING IS LESS THAN 6" ON EITHER SIDE. PANEL JOINTS SHALL BE OFFSET TO FALL ON DIFFERENT FRAMING MEMBERS.
2. FASTENER SPACING TO BE AS SHOWN ON DETAIL U.N.O.
3. ALL EDGES OF PANELS SHALL BE SUPPORTED BY AND FASTENED TO FRAMING MEMBERS OF BLOCKING.
4. THE ALLOWABLE SHEAR CAPACITY OF SHEAR WALL SEGMENTS SHEATHED WITH A COMBINATION OF WOOD STRUCTURAL PANELS AND GYPSUM WALL BOARD ON OPPOSITE FACES SHALL EQUAL THE SUM OF THE SHEATHING CAPACITIES OF EACH FACE SEPARATELY.
5. ADHESIVE ATTACHMENT OF SHEAR WALL SHEATHING IS NOT PERMITTED AS A SUBSTITUTE FOR MECHANICAL FASTENERS.
6. BWP3 TO BE GYPSUM ONE SIDE AND OSB OPPOSITE U.N.O.
7. STUD SPACING TO BE 16" O.C. FOR ALL SHEAR WALLS (SOLID ON PLAN).

STRUCTURAL PANEL WALL ASSEMBLIES				
PANEL THICKNESS	WALL CONSTRUCTION	FASTNER SPACING	SHEAR CAPACITY	MINIMUM FASTNER
7/16"	BLOCKED OSB	6/12"	364 PLF	8d COMMON 2 – 1/2X0.113 GALVANIZED BOX
		4/12"	532 PLF	
		3/12"	686 PLF	

BWP3

WOOD STRUCTURAL PANEL

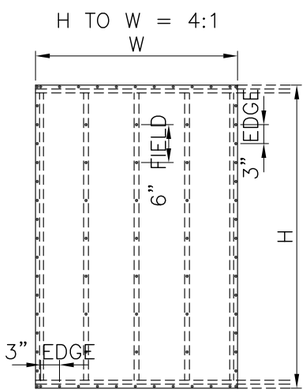

1. FASTENER SPACING TO BE AS SHOWN ON DETAIL U.N.O.
2. ALL EDGES OF PANELS SHALL BE SUPPORTED BY AND FASTENED TO FRAMING MEMBERS OR BLOCKING.
3. THE ALLOWABLE SHEAR CAPACITY OF SHEAR WALL SEGMENTS SHEATHED WITH A COMBINATION OF STRUCTURAL PANELS AND GYPSUM WALL BOARD ON OPPOSITE FACES SHALL EQUAL THE SUM OF THE SHEATHING CAPACITIES OF EACH FACE SEPARATELY.
4. ADHESIVE ATTACHMENT OF SHEAR WALL SHEATHING IS NOT PERMITTED AS A SUBSTITUTE FOR MECHANICAL FASTENERS.
5. BWP4 TO BE GYPSUM ONE SIDE AND STRUCTURAL PANEL OPPOSITE U.N.O.
6. STUD SPACING TO BE 16" O.C. FOR ALL SHEAR WALLS (SOLID ON PLAN).

BWP4

STRUCTURAL FIBERBOARD SHEATHING

FIBERBOARD WALL PANEL ASSEMBLIES				
PANEL THICKNESS	WALL CONSTRUCTION	FASTNER SPACING	SHEAR CAPACITY	MINIMUM FASTNER
THERMO–PLY RED	THERMO–PLY RED	3/6"	125 PLF	7/16" X 1 – 1/4" X 16 GO. STAPLES
1/2"	BLOCKED QUIETBRACE	3/6"	200 PLF	7/16" X 1 – 1/2" X 16 GO. STAPLES
7/16"	BLOCKED OSB	6/12"	196 PLF	(2) 7/16" X 1 – 1/2" X 16 GO. STAPLES

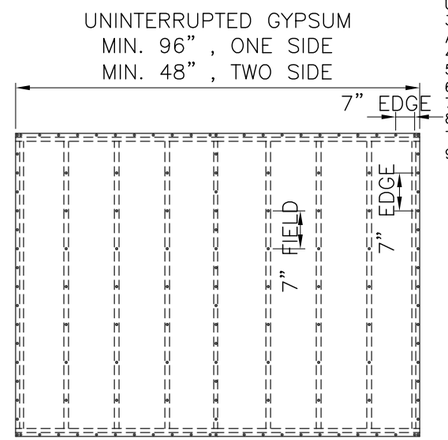

1. GYPSUM SHEATHING FOUR FOOT WIDE PIECES OF GYPSUM SHEATHING SHALL BE APPLIED PARALLEL TO STUDS.
2. WALL LINE TO BE EITHER MIN. 96" ONE SIDE, OR MIN. 48" TWO SIDES OF UNINTERRUPTED GYPSUM WALL BOARD.
3. GYPSUM WALL BOARD TO BE FASTENED TO TOP PLATE, BOTTOM PLATE AND ALL INTERSECTED STUDS AT 7" O.C. AT EDGE AND 7" O.C. IN THE FIELD.
4. BLOCKING IS NOT REQUIRED UNLESS NOTED ON PLAN.
5. OSB REQUIRED ONLY IF NOTED ON PLAN.
6. THERMO–PLY/QUIETBRACE REQUIRED ONLY IF NOTED ON PLAN.
7. FASTENER SPACING AS SHOWN ON DETAIL U.N.O.
8. ALL INTERIOR BWP5 TO BE GYPSUM BOTH SIDES U.N.O ALL EXTERIOR BWP5 TO BE GYPSUM INTERIOR W/UNSHEATHEAD EXTERIOR U.N.O.
9. STUD SPACING TO BE 16" O.C. FOR ALL SHEAR WALLS (SOLID ON PLAN).

BWP5

GYPSUM BOARD WALL

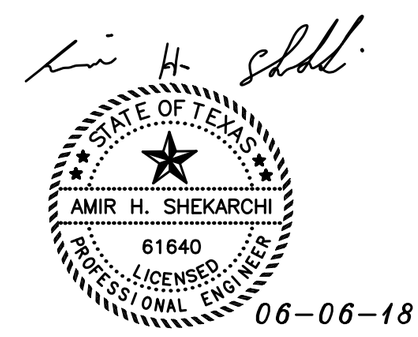

06–06–18

FIRM REGISTRATION NO. F–1586

GYPSUM BOARD WALL ASSEMBLIES FRAMING SPACING 16" O.C.				
PANEL THICKNESS	WALL CONSTRUCTION	FASTNER SPACING	SHEAR CAPACITY	MINIMUM FASTNER
1/2"	UNBLOCKED	7/7"	100 PLF	1 – 5/8" DRYWALL SCREW WALLBOARD 0.120 NAIL. 3/8" HEAD. 1 – 1/2" LONG
		4/4"	125 PLF	
	BLOCKED	7/7"	125 PLF	
		4/4"	150 PLF	
5/8"	BLOCKED TWO PLY	BASE PLY: 9/9 FACE PLY: 7/7	250 PLF	BASE PLY: 1 – 7/8" DRYWALL SCREW OR #6X1–1/4" TYPE S OR W FACE PLY: 8d COOLER (2 – 3/8X0.113") 1 – 3/8 LONG

WIND BRACING DETAILS

Scale: N.T.S.

SA Engineering Company
Consulting Engineers
(210) 561–0808 FAX: (210) 561–0844
12719 Spectrum Dr., San Antonio, Texas 78249

LINDSEY/SABATINO RESIDENCE

206 WEST LULLWOOD AVE., SAN ANTONIO, TEXAS

REVISIONS

JOB NO. 18PX–010

DATE 05–31–18

SHEET S–1 OF 4

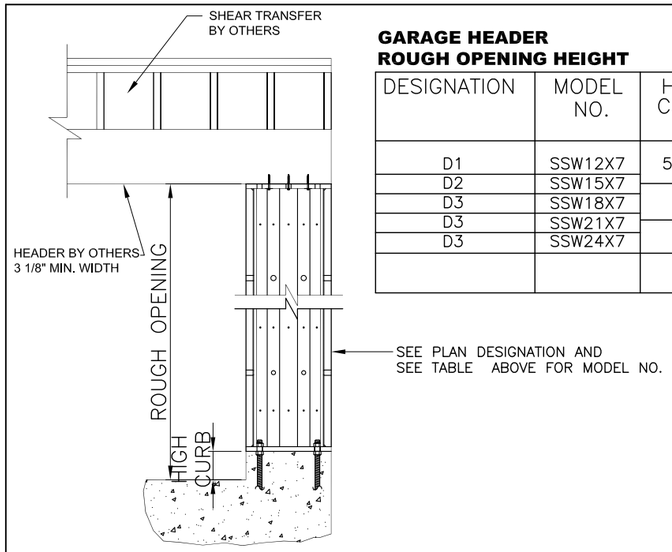

GARAGE HEADER ROUGH OPENING HEIGHT

DESIGNATION	MODEL NO.	HIGH CURB	ROUGH OPENING HEIGHT
D1	SSW12X7	5 1/2"	7'-1 1/2"
D2	SSW15X7		
D3	SSW18X7	6"	7'-2"
D3	SSW21X7		
D3	SSW24X7		

1 / S-2 SIMPSON STRONG WALL OR APPROVED EQUAL

ALTERNATE BRACED WALL PANEL 1 AND 2 MINIMUM WIDTHS AND HOLDOWNS					
WALL HEIGHTS	8'	9'	10'	11'	12'
MINIMUM WIDTH	2' – 4"	2' – 8"	2' – 8"	3' – 2"	3' – 6"
ABWP1 HOLDOWN	SIMPSONS HD2A / USP TDX2				
ABWP1 HOLDOWN	SIMPSONS HD5A / USP TDX5				

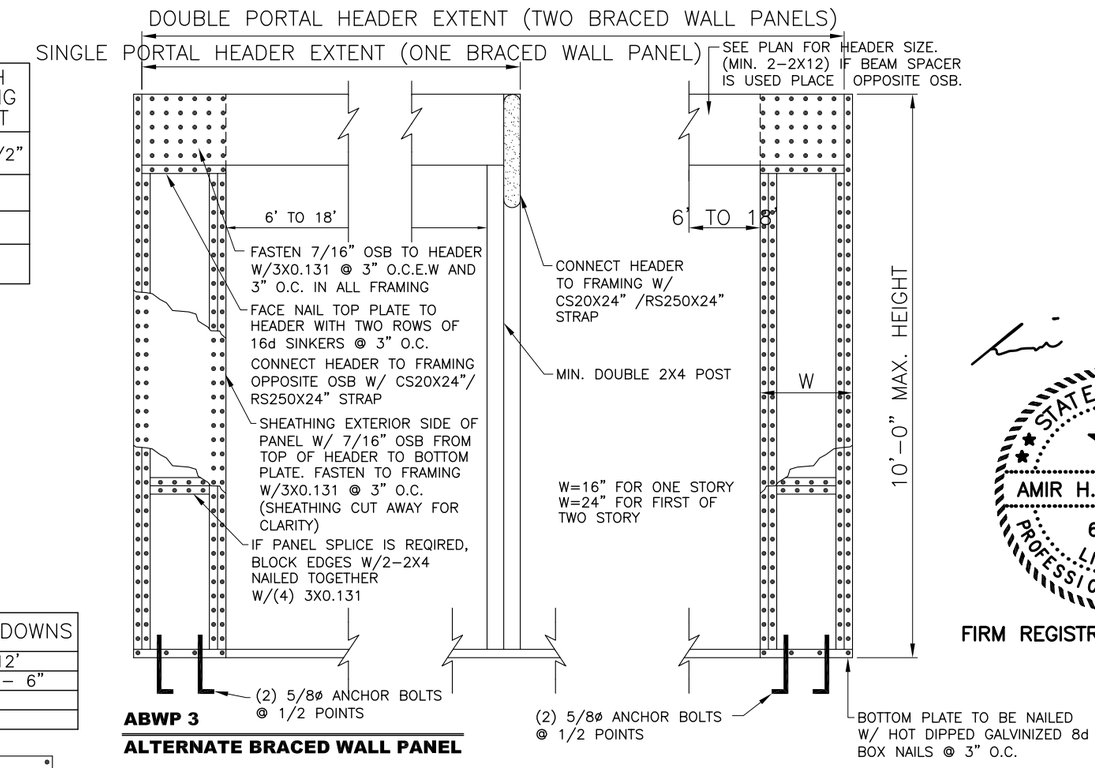

ABWP 3

ALTERNATE BRACED WALL PANEL

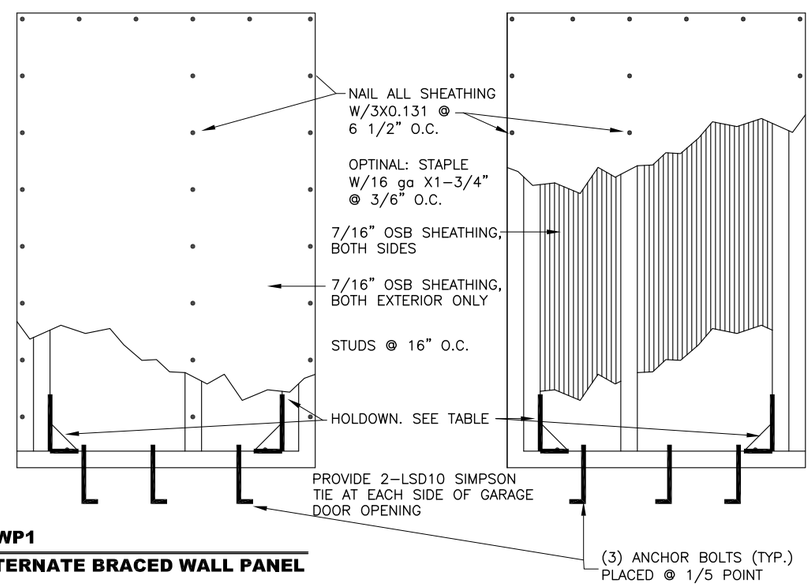

ABWP1

ALTERNATE BRACED WALL PANEL

ABWP2

ALTERNATE BRACED WALL PANEL

REQUIRED PANEL WIDTH FOR LET - IN BRACING BETWEEN TWO WINDOWS

ANGLE OF BRACING	PLATE HT (A)	DIM. (C) PANEL WIDTH	WINDOW OR DOOR SIZE	DIM B FLOOR TO TOP OF WINDOW
60	8' – 1"	3' – 2"	3050	6' – 10"
60	9' – 1"	3' – 10"	3060	7' – 10"
60	9' – 1"	2' – 11"	3050	7' – 10"
60	10' – 1"	3' – 7"	3060	7' – 10"

REQUIRED PANEL WIDTH FOR LET - IN BRACING AT END WALL NEXT TO A WINDOW

ANGLE OF BRACING	PLATE HT (A)	DIM. (C) PANEL WIDTH	WINDOW SIZE	DIM B FLOOR TO TOP OF WINDOW
60	8' – 1"	2' – 8"	3030	6' – 10"
60	8' – 1"	3' – 2"	3040	6' – 10"
60	8' – 1"	3' – 8"	3050	6' – 10"
60	9' – 1"	2' – 8"	3030	7' – 10"
60	9' – 1"	3' – 2"	3040	7' – 10"
60	9' – 1"	3' – 8"	3050	7' – 10"
60	10' – 1"	4' – 10"	3060	7' – 10"

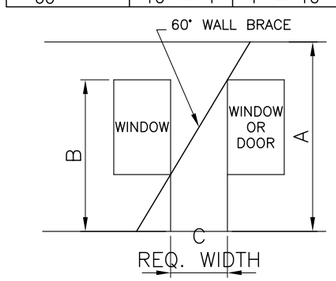

BRACED WALL PANEL BETWEEN WINDOWS

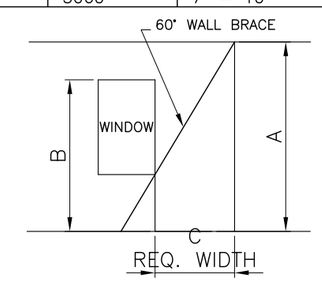

BRACED WALL PANEL END WALL NEAR WINDOW

WIND BRACING DETAILS

Scale: N.T.S.

STATE OF TEXAS
AMIR H. SHEKARCHI
61640
LICENSED
PROFESSIONAL ENGINEER
06-06-18

FIRM REGISTRATION NO. F-1586

SA Engineering Company
Consulting Engineers
(210) 561-0808 FAX: (210) 561-0844
12719 Spectrum Dr., San Antonio, Texas 78249

LINDSEY/SABATINO RESIDENCE
206 WEST LULLWOOD AVE., SAN ANTONIO, TEXAS

REVISIONS

JOB NO. 18PX-010
DATE 05-31-18

SHEET S-2 OF 4

LEGEND:

EXTERIOR AND INTERIOR

BWP1 / S-1 LET-IN BRACE (LIB)

1 / S-2 SIMPSON STRONG WALL

ABWP1 / S-2, ABWP2 / S-2 ALTERNATE BRACED WALL (7/16" OSB) OR ZIPPED SYSTEM

(TPR) THERMO-PLY RED STRUCTURAL

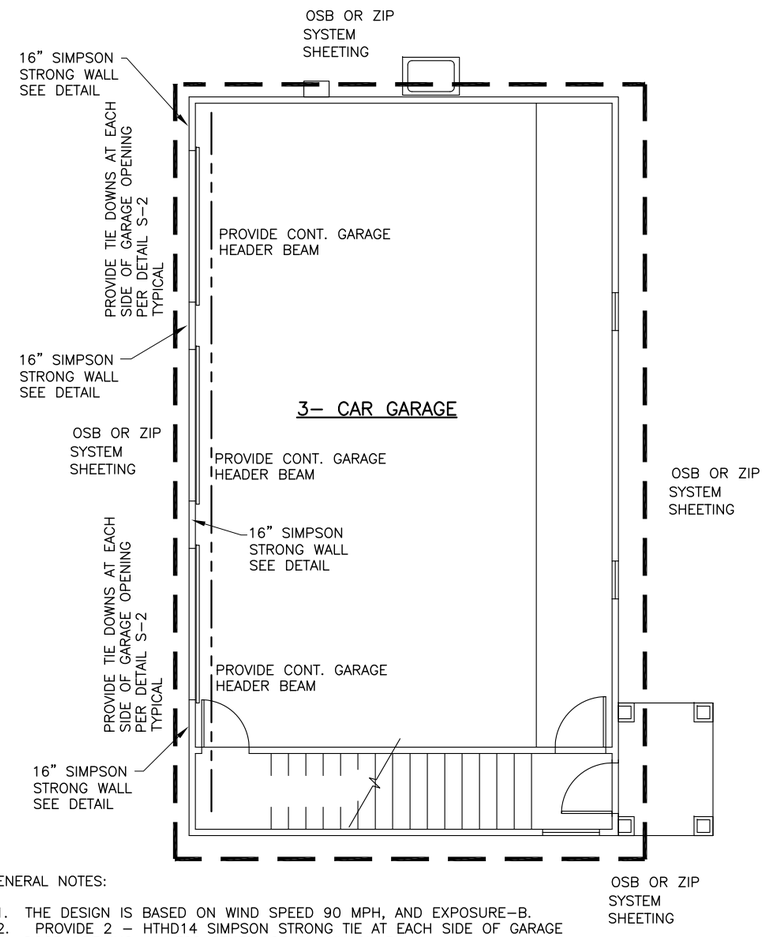

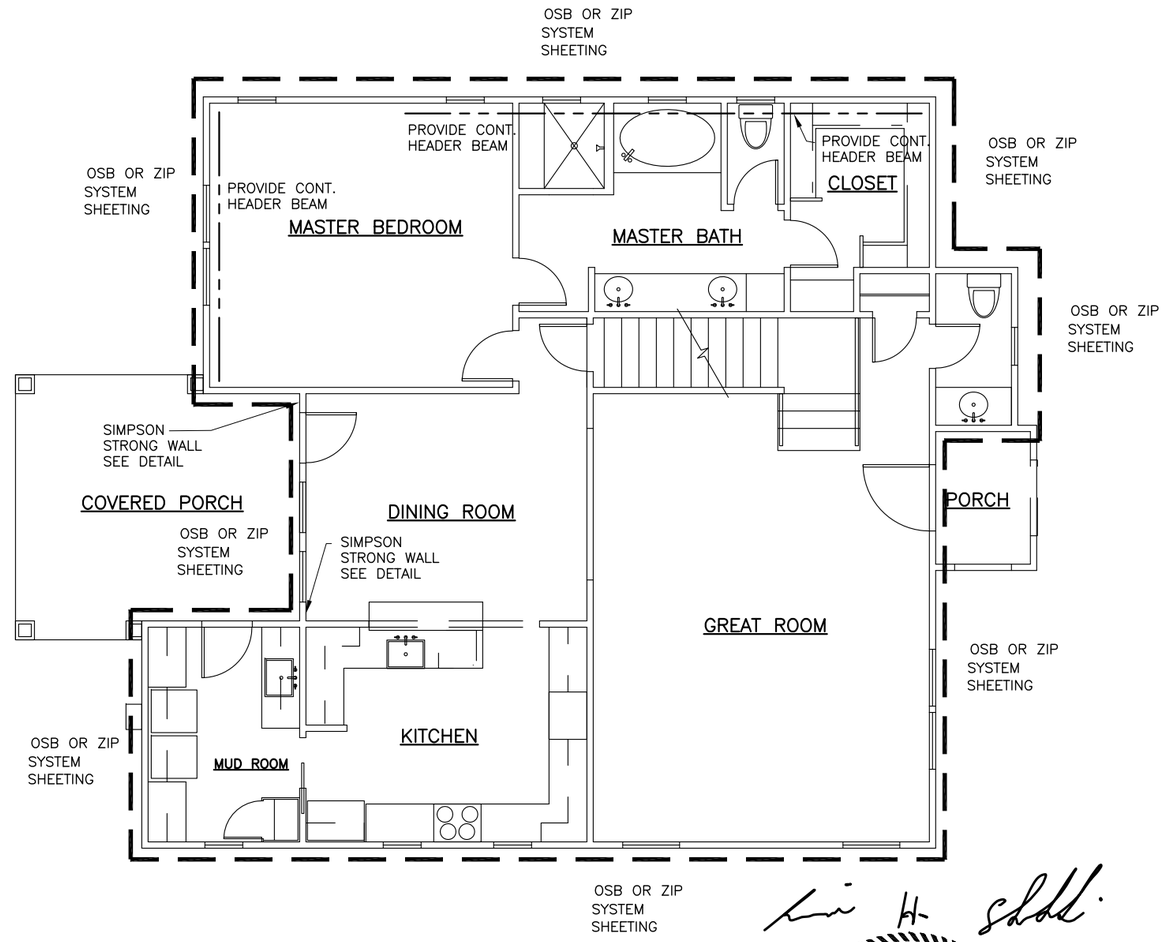

GENERAL NOTES:

1. THE DESIGN IS BASED ON WIND SPEED 90 MPH, AND EXPOSURE-B.
2. PROVIDE 2 - HTHD14 SIMPSON STRONG TIE AT EACH SIDE OF GARAGE DOOR OPENING, UNLESS OTHERWISE SHOWN ON PLAN.
3. THE BEAM OVER GARAGE DOOR OPENINGS SHALL BE CONTINUOUS FROM OUT - TO-OUT UNLESS OTHERWISE SHOWN ON PLAN.
4. PROVIDE MSTC STRAPS (40,52,66 OR 78) TO MAINTAIN MINIMUM OF 12" OVERLAP AT BEAM AND STUD WALLS, PROVIDE MINIMUM OF 3 STRAPS AT BRASED WALL PANELS.
5. LIB IS SHOWN ON PLAN IS APPROXIMATE LOCATION. THE LOCATION MAY VARY 3' ALONG THE SAME BRACE LINE(WBL).
6. THIS PLAN IS ONLY DESIGNED TO PROVIDE SHEAR WALLS. THE CONTRACTOR IS RESPONSIBLE TO PROVIDE ADEQUATE STRUCTURAL MEMBERS AS REQUIRED BY BUILDING CODES ENFORCEMENT.
7. PROVIDE SIMPSON STRONG TIE H2.5A AT EVERY OTHER ROOF JOIST OR TRUSS, AND THE FLOOR JOIST, BEARING AT EXTERIORS WALLS.

NOTE: FASTENER SPACING FOR ZIP SYSTEM SHALL BE THE SAME AS OSB SHEETING.

FIRST FLOOR PLAN

Scale: N.T.S.

WIND BRACING PLAN

Scale: N.T.S.

STATE OF TEXAS
AMIR H. SHEKARCHI
61640
LICENSED
PROFESSIONAL ENGINEER

06-06-18

FIRM REGISTRATION NO. F-1586

SA Engineering Company
Consulting Engineers
(210) 561-0808 FAX: (210) 561-0844
12719 Spectrum Dr., San Antonio, Texas 78249

LINDSEY/SABATINO RESIDENCE

206 WEST LULLWOOD AVE., SAN ANTONIO, TEXAS

REVISIONS

JOB NO. 18PX-010

DATE

SHEET S-3 OF 4

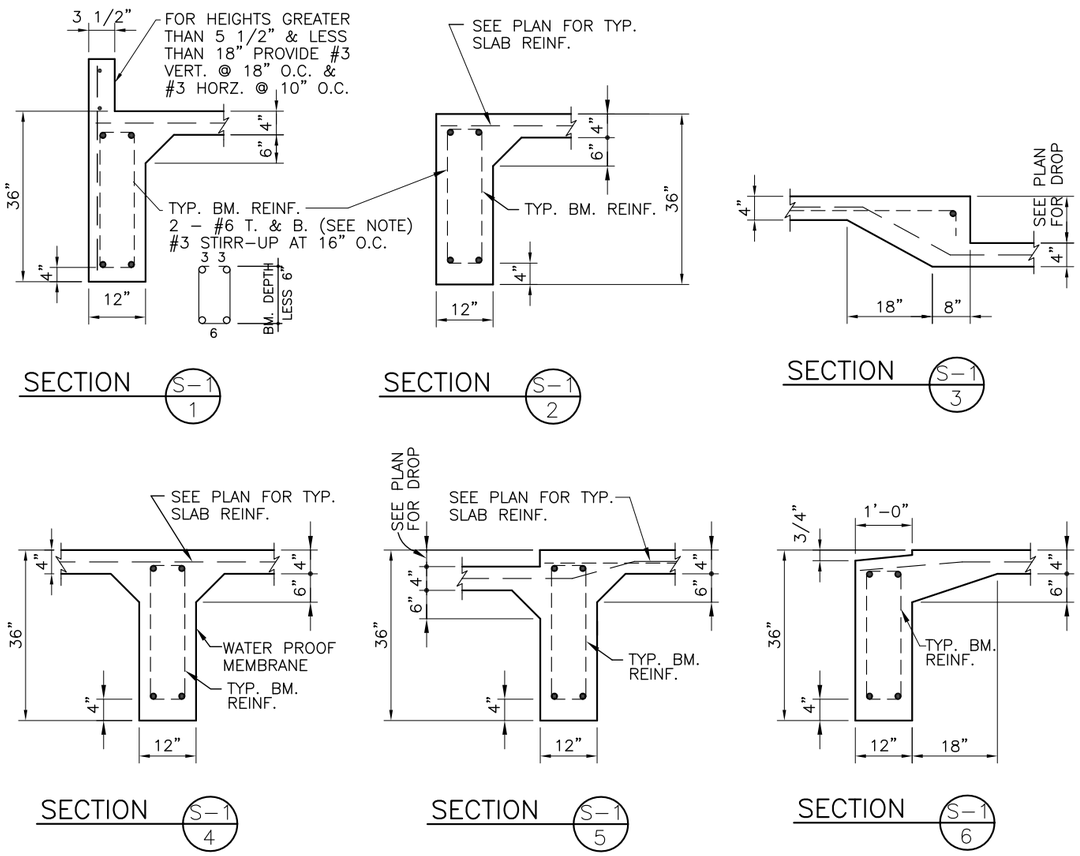

GENERAL NOTES

1. The area to be occupied by the floor slab shall be stripped of all vegetation and top soil.
2. The fill material shall be granular, crushed limestone and have a plasticity index range of 7 to 15, and maximum liquid limit of forty (40). Trench excavation shall not be used as fill material.
3. Reinforcing bars shall be new billet steel meeting requirements of ASTM–615, #3 bars shall be Grade 40, #4 bars and larger shall be grade 60.
4. Reinforcing shall be detailed and placed in accordance with ACI Manual ACI–315. All bars shall be supported in beams and slabs with chairs or slab blosters. Beam and slab reinforcement shall be continuous.
5. Concrete shall have a minimum compressive strength of 3000 psi in 28 days. Concrete mix shall not contain more than 20% fly ash.
6. Beam reinforcing shall be as shown on beam sections. Corner bars and bars at ends of interior beams shall be as shown on plan. For exterior beam depths greater than 48" provide stirrup spacing of 18" o.c. and #4 bars at 12" o.c. at outside face.
7. Slab reinforcing shall be as shown on the plan and 2" clear from top of slab. Extend slab reinforcing to top outside bars of perimeter beams. Start slab spacing not more than 6" from top inside beam bar.
8. All beam depth dimensions are minimum. All interior beams shall extend a minimum of 12" into undisturbed soil. All exterior beams shall extend a minimum of 24" into undisturbed soil.
9. All beams excavations shall be cleaned of any loose fill prior to concrete placement.
10. Waterproofing below slab areas shall be equal to 6 Mil. " Visqeen " with all joints lapped 12" and taped continuously. Waterproofing shall extend across bottom of interior and exterior beams.
11. All conduit or plumbing lines in slab shall be placed below reinforcing. Copper lines shall be sheathed in plastic.
12. When concrete pour occurs at or above 85 degrees F. (air temperature) add a retarder to the mix in accordance with the manufacture's recommendations. Use pozzolith type 300–R.
13. Backfill around perimeter to provide drainage away from foundation a minimum of 6" in 5 feet.
14. The contractor shall verify all slab dimensions with the Architect or Designer and shall see architectural drawings for any embeded items before pouring concrete.

THIS FOUNDATION HAS BEEN DESIGNED FOR SOIL CONDITIONS BASED ON A SOIL ANALYSIS PREPARED BY ROCK DATED 2–19–18 AND P.I. 36.

REINF. BAR	
SIZE	SPLICE
#3	15
#4	20
#5	26
#6	31
#7	36
#8	42

BEAM SCHEDULE

BEAM WIDTH "W"	EXTERIOR BEAM DEPTH "D"	INTERIOR BEAM DEPTH "D"	EXT. BEAM INTO UNDISTURBED SOIL	INT. BEAM INTO UNDISTURBED SOIL
12"	36"	36"	24"	12"
2 – #6 TOP & BOTTOM BM. REINF. WITH #3 STIRRUP @ 16" O.C.				

STATE OF TEXAS
AMIR H. SHEKARCHI
61640
LICENSED PROFESSIONAL ENGINEER
05–31–18

FIRM REGISTRATION NO. F–1586

SA Engineering Company
Consulting Engineers
(210) 561–0808 FAX: (210) 561–0844
12719 Spectrum Dr., San Antonio, Texas 78249

LINDSEY/SABATINO RESIDENCE
206 WEST LULLWOOD AVE., SAN ANTONIO, TEXAS

REVISIONS

JOB NO. 18PX–010
DATE 05–31–18
GARAGE 919 SQFT.
HOUSE 1785 SQFT.
TOTAL 2704 SQFT.

SHEET S–1 OF 2

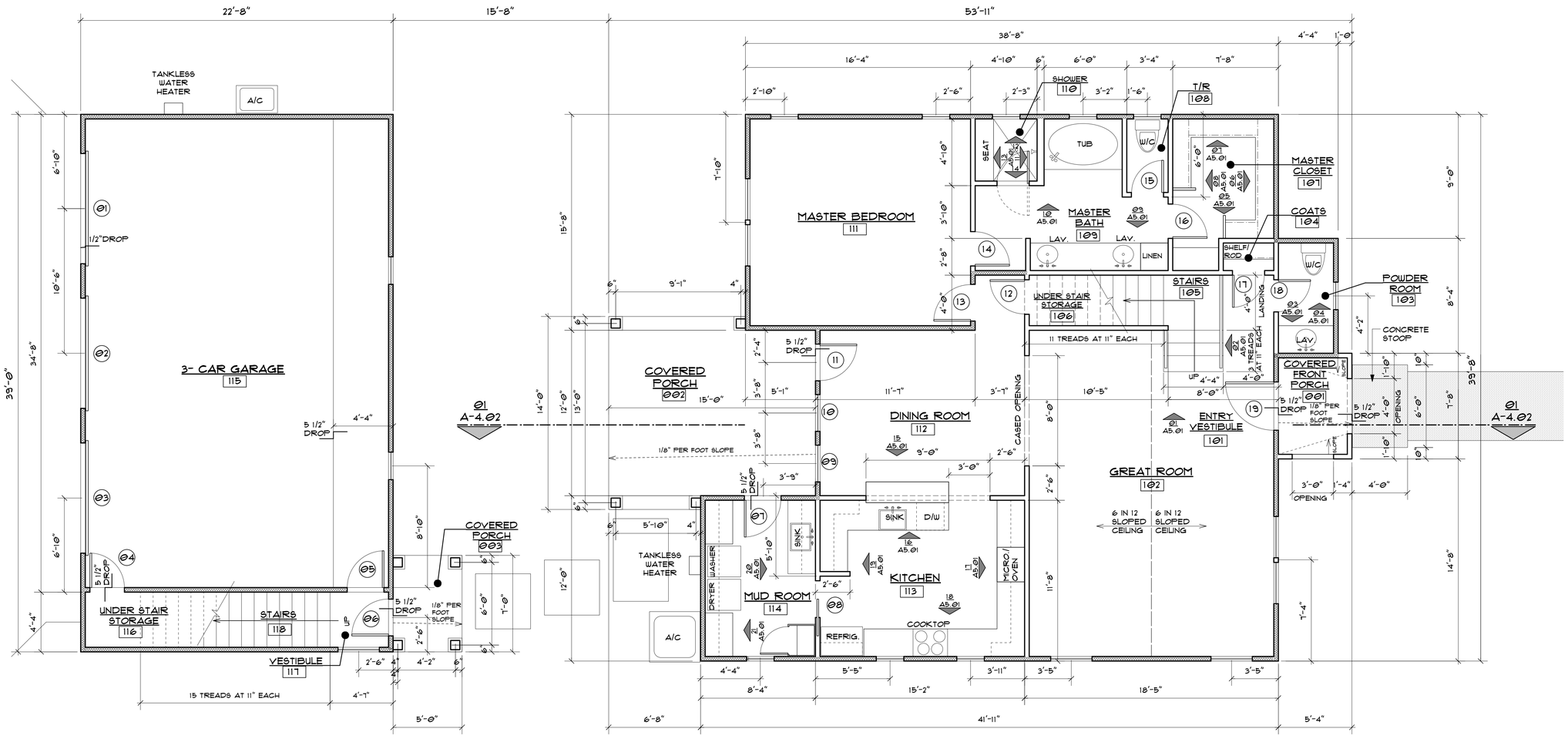

FIRST FLOOR PLAN

SCALE: 1/4" = 1'-0"

WALL LEGEND
4" UN-INSULATED STUD WALLS
4" INSULATED STUD WALLS

SQUARE FOOTAGE TABULATIONS

MAIN HOUSE	
FIRST FLOOR A/C	1,548 S.F.
SECOND FLOOR A/C	815 S.F.
COVERED PORCHES	274 S.F.
TOTAL SQUARE FOOTAGE MAIN HOUSE	2,637 S.F
CARRIAGE HOUSE	
GARAGE / STAIRS	884 S.F.
CARRIAGE HOUSE STAIR VESTIBULE	50 S.F.
SECOND FLOOR A/C	672 S.F.
TOTAL SQUARE FOOTAGE CARRIAGE HOUSE	1,606 S.F.
TOTAL SQUARE FOOTAGE	4,243 S.F.

P·E·C A·I·A

PECAIA, Inc.
159 Case Lane, San Antonio, Texas 78209
phone 210.785.9823
paul@pecaia.com

REGISTERED ARCHITECT PAUL E. CASSEB JR. 13939 STATE OF TEXAS

EXPIRES: 10.31.2018

A NEW CUSTOM RESIDENCE FOR LINDSEY / SABATINO

206 West Lullwood Ave., San Antonio Texas 78212

Revisions

No.	ISSUE	DATE

SUBMITTAL DRAWINGS FOR HDRC FINAL APPROVAL

Drawing Information

Project No.	Date	Scale
2017.1501	08.24.18	

Drawing No.

A-2.01

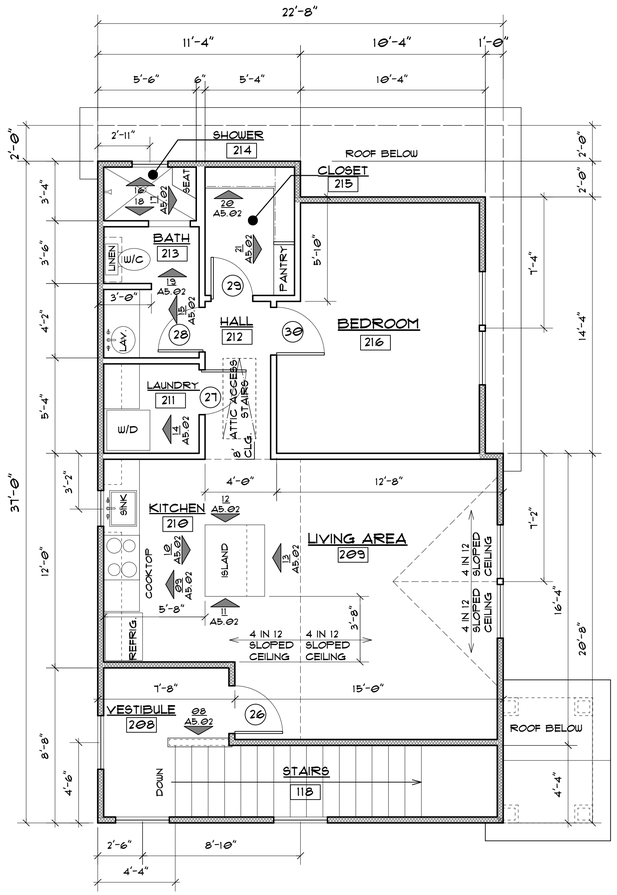

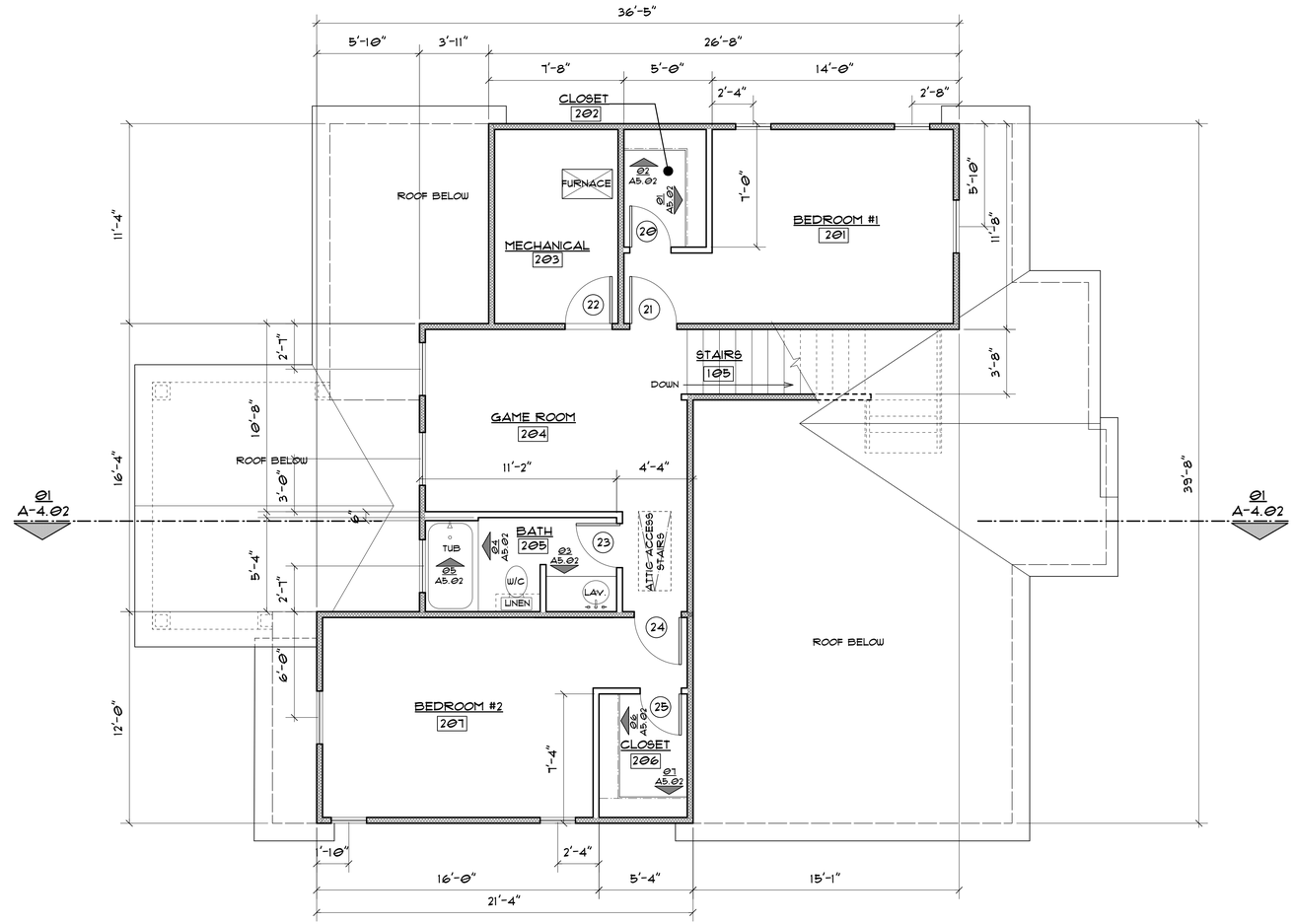

SECOND FLOOR PLAN

SCALE: 1/4" = 1'-0"

P·E·C
A·I·A

PECAIA, Inc.
159 Cave Lane, San Antonio, Texas 78209
phone 210.785.9823
paul@pecaia.com

REGISTERED ARCHITECT
PAUL E. CASSEB JR.
13939
STATE OF TEXAS

EXPIRES: 10.31.2018

A NEW CUSTOM RESIDENCE FOR LINDSEY / SABATINO

206 West Lullwood Ave., San Antonio Texas 78212

Revisions

No.	ISSUE	DATE

SUBMITTAL DRAWINGS FOR HDRC FINAL APPROVAL

Drawing Information

Project No.	Date	Scale
2017.1501	08.24.18	

Drawing No.

A-2.02

LIGHTING SCHEDULE

A	HUNTINGTON WALL MOUNTED LANTERN, MODEL #4635WB WEATHERED BRONZE, 60W
B	LITHONIA ADJUSTABLE WALL MOUNTED FLOOD, MODEL # OVFL LED 2RH 40K TWIN HEAD BRONZE 120W 4000K LED, WITH PHOTOCELL

LIGHTING & ELECTRICAL LEGEND

- CEILING FAN
- CEILING FAN WITH LIGHT
- SURFACE MOUNTED LIGHT FIXTURE
- WALL MOUNTED LIGHT FIXTURE
- P.C. LIGHT FIXTURE ON PULL CHAIN
- RECESSED LIGHT FIXTURE
- RECESSED "EYEBALL" LIGHT FIXTURE
- RECESSED WATERPROOF LIGHT FIXTURE
- EXHAUST FAN
- LIGHT / EXHAUST FAN
- UNDER CABINET STRIP LIGHT
- "ROPPE" LIGHTING
- CEILING MOUNTED TRACK LIGHT
- CEILING MOUNTED PENDANT LIGHT
- 2 X 4 FLOURESCENT LIGHT FIXTURE
- FLOOD LIGHT FIXTURE
- STEP LIGHT
- HB HOSE BIBB
- LIGHT SWITCH
- 3 THREE-WAY LIGHT SWITCH
- 4 FOUR-WAY LIGHT SWITCH
- D SWITCH - LIGHT DIMMER CONTROL
- F SWITCH - CEILING FAN CONTROL
- CIRCUIT BREAKER PANEL
- ELECTRICAL OUTLET
- SWITCHED ELECTRICAL OUTLET
- DC DEDICATED CIRCUIT ELECTRICAL OUTLET
- 220V ELECTRICAL OUTLET
- GFI GROUND FAULT ELECTRICAL OUTLET
- WP GFCI GFCI ELECTRICAL OUTLET IN WATERPROOF ENCLOSURE
- FLOOR MOUNTED ELECTRICAL OUTLET
- JUNCTION BOX
- TELEPHONE OUTLET
- CATV OUTLET
- GAS OUTLET
- SD SMOKE DETECTOR
- H HEAT DETECTOR
- DB DOOR BELL CHIME
- T THERMOSTAT
- ALARM KEYPAD
- LS LOUD SPEAKERS

TYPICAL MOUNTING HEIGHTS
(UNLESS NOTED OTHERWISE)

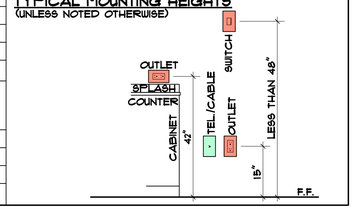

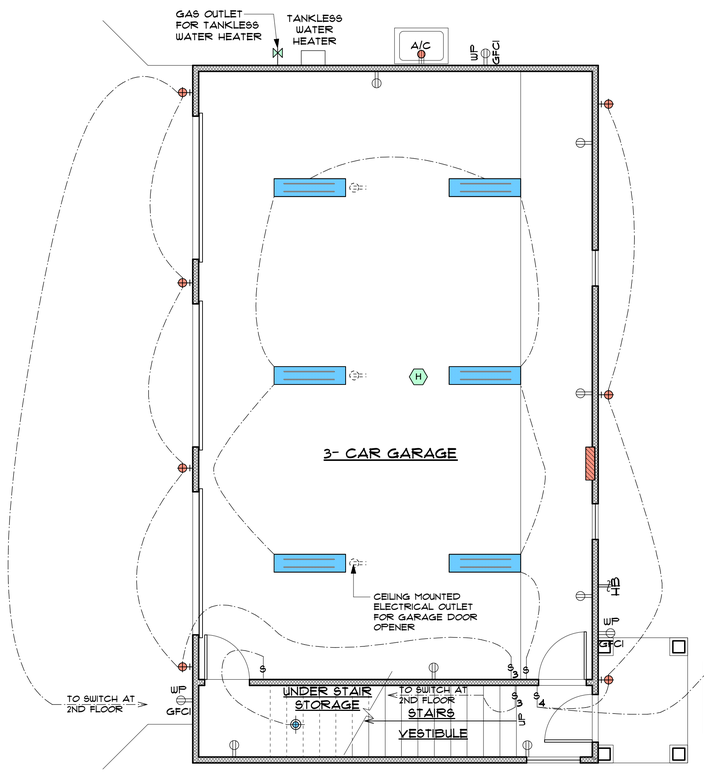

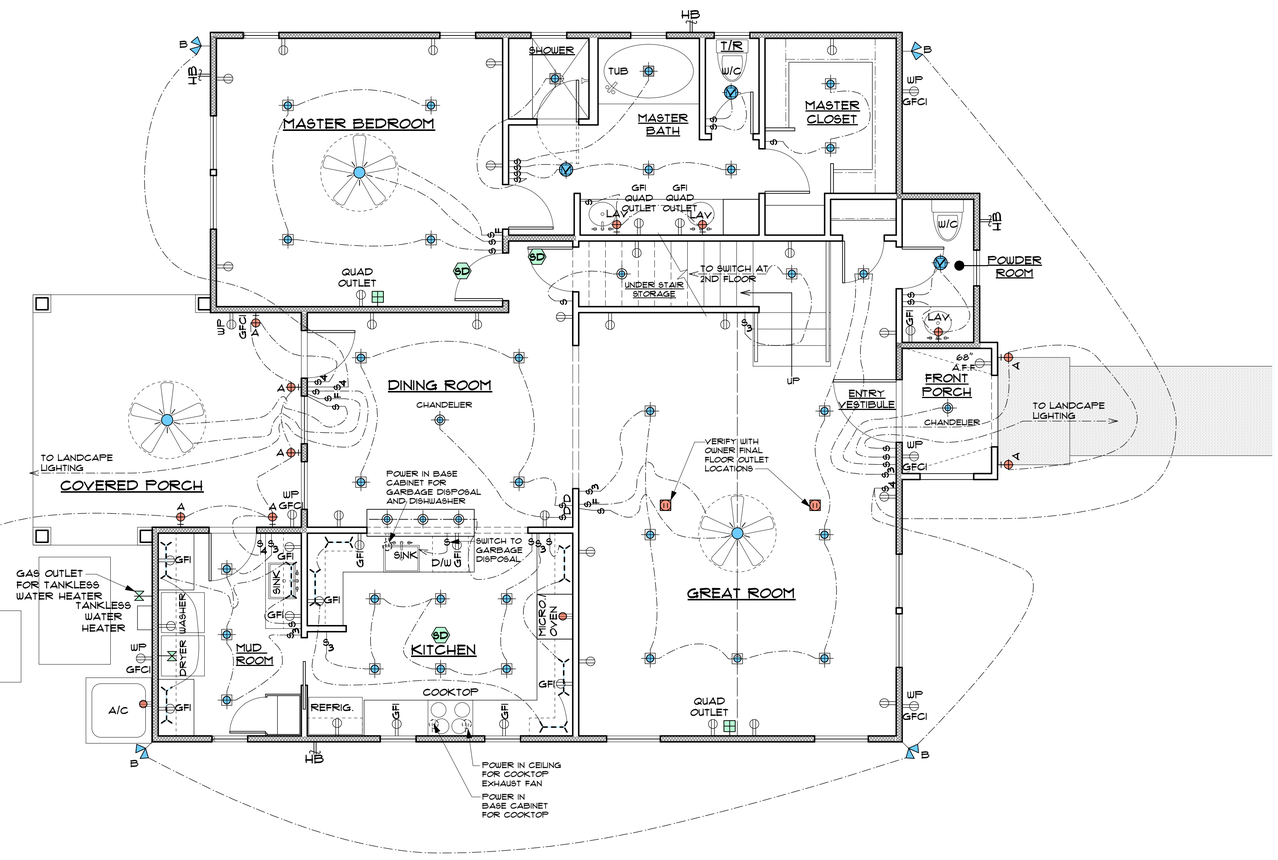

ARC FAULT CIRCUIT INTERRUPTER

ALL BRANCH CIRCUITS THAT SUPPLY 120-VOLT, SINGLE PHASE, 15 AND 20-AMPERE OUTLETS INSTALLED IN FAMILY ROOMS, DINING ROOMS, LIVING ROOMS, PARLORS, LIBRARIES, DENS, BEDROOMS, SUNROOMS, RECREATIONS ROOMS, CLOSETS, HALLWAYS, AND SIMILAR ROOMS OR AREAS SHALL BE PROTECTED BY A COMBINATION TYPE ARC-FAULT CIRCUIT INTERRUPTER INSTALLED TO PROVIDE PROTECTION OF THE BRANCH CIRCUIT.

LIGHTING / ELECTRICAL NOTES:

1. ROUGH-IN ONLY FOR ALL FAN/LIGHT KIT LOCATIONS SHOWN ON PLANS. PROVIDE NECESSARY BLOCKING FOR ALL FUTURE FAN INSTALLATION.

FIRST FLOOR LIGHTING / ELECTRICAL PLAN
SCALE: 1/4" = 1'-0"

P·E·C A·I·A
PECAIA, Inc.
159 Cave Lane, San Antonio, Texas 78209
phone 210.785.9823
paul@pecaia.com

REGISTERED ARCHITECT PAUL E. CASSES JR. 13939 STATE OF TEXAS

EXPIRES: 10.31.2018

A NEW CUSTOM RESIDENCE FOR LINDSEY / SABATINO
206 West Lullwood Ave., San Antonio Texas 78212

Revisions

No.	ISSUE	DATE

SUBMITTAL DRAWINGS FOR HDRC FINAL APPROVAL

Drawing Information

Project No.	Date	Scale
2017.1501	08.24.18	

Drawing No.
A-3.01

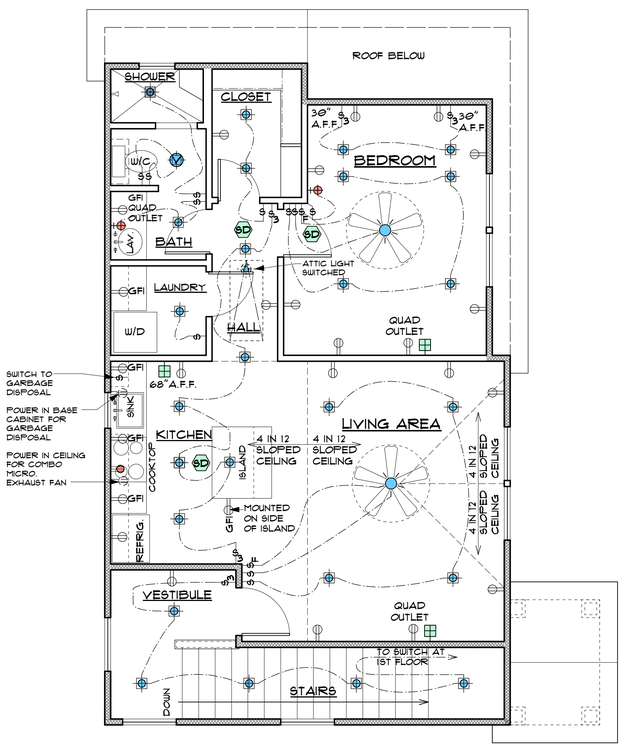

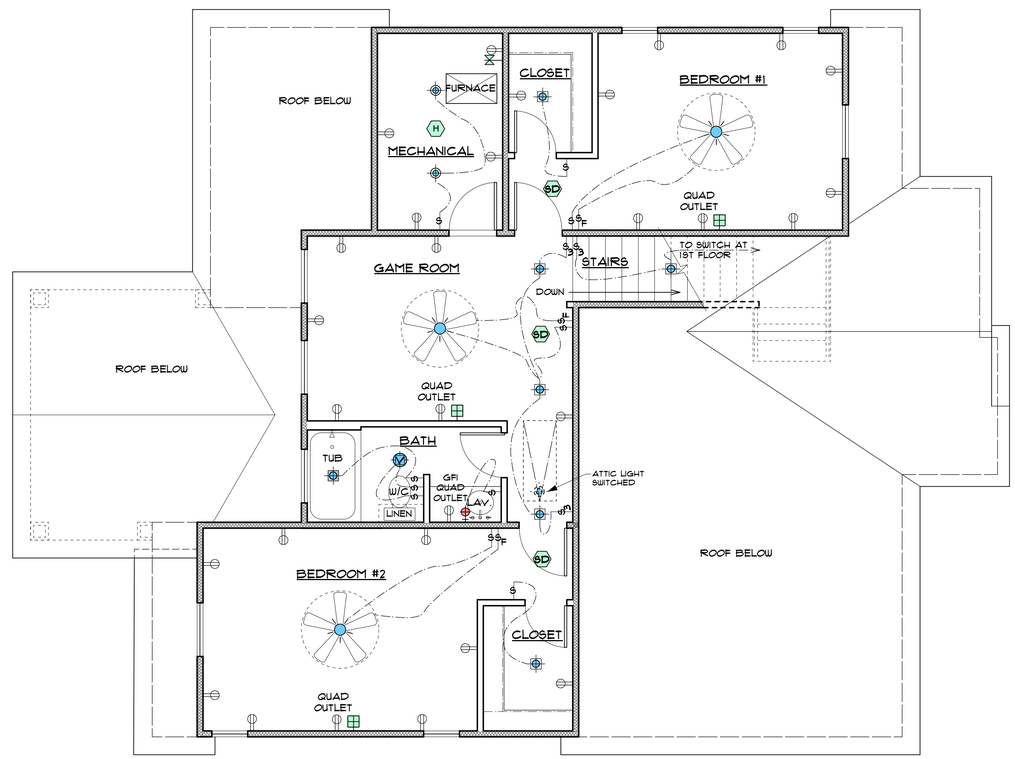

SECOND FLOOR LIGHTING / ELECTRICAL PLAN

SCALE: 1/4" = 1'-0"

P·E·C A·I·A

PECAIA, Inc.
159 Case Lane, San Antonio, Texas 78209
phone 210.785.9823
paul@pecaia.com

REGISTERED ARCHITECT PAUL E. CASSEB JR. 13939 STATE OF TEXAS

EXPIRES: 10.31.2018

A NEW CUSTOM RESIDENCE FOR LINDSEY / SABATINO

206 West Lullwood Ave., San Antonio Texas 78212

Revisions

No.	ISSUE	DATE

SUBMITTAL DRAWINGS FOR HDRC FINAL APPROVAL

Drawing Information

Project No.	Date	Scale
2017.1501	08.24.18	

Drawing No.

A-3.02

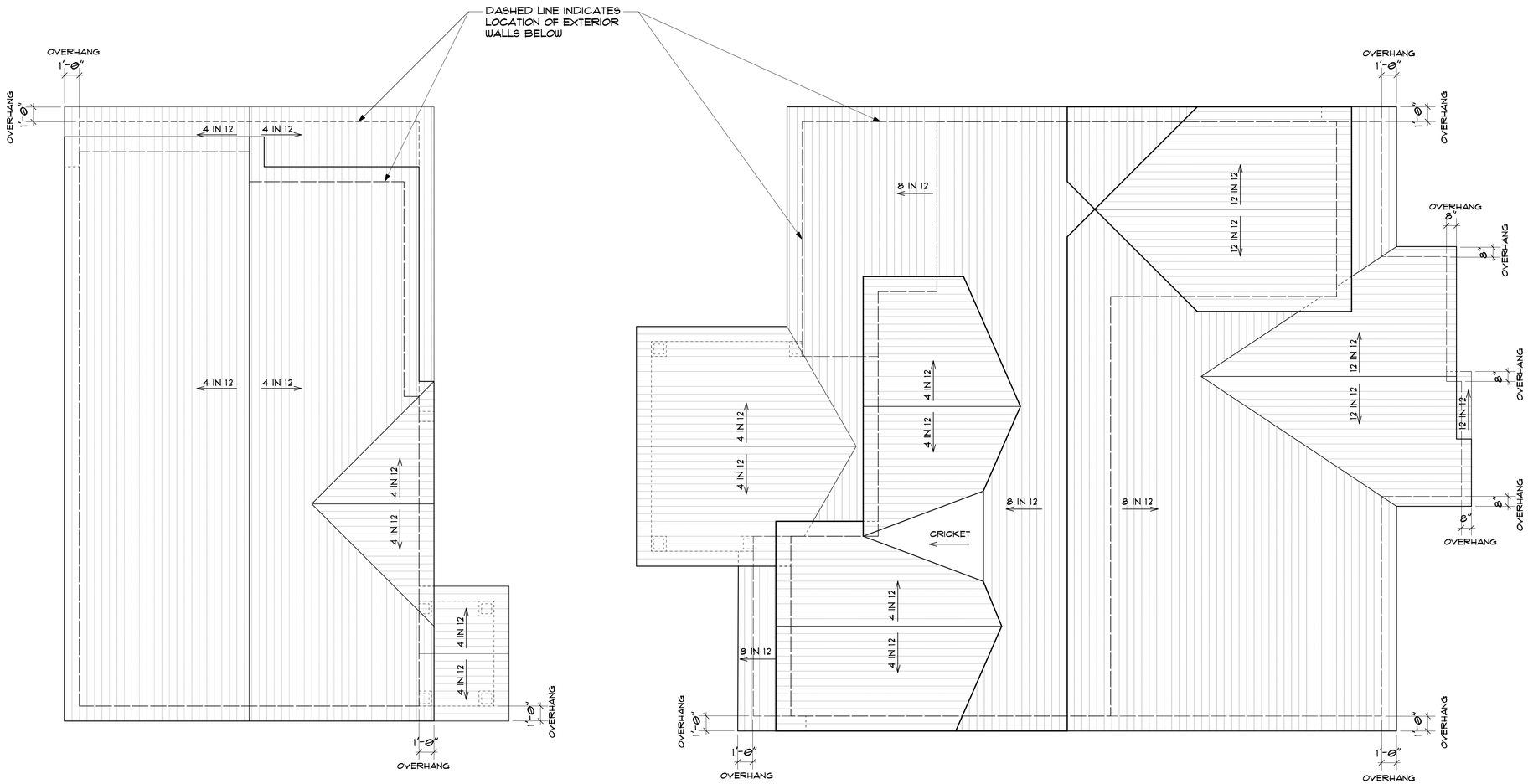

ROOF PLAN

SCALE: 1/4" = 1'-0"

P·E·C A·I·A

PECAIA, Inc.
159 Cave Lane, San Antonio, Texas 78209
phone 210.785.9823
paul@pecaia.com

REGISTERED ARCHITECT PAUL E. CASSEB JR. 13939 STATE OF TEXAS

EXPIRES: 10.31.2018

A NEW CUSTOM RESIDENCE FOR LINDSEY / SABATINO

206 West Lullwood Ave., San Antonio Texas 78212

Revisions

No.	ISSUE	DATE

SUBMITTAL DRAWINGS FOR HDRC FINAL APPROVAL

Drawing Information

Project No.	Date	Scale
2017.1501	08.24.18	

Drawing No.

A-2.03

INTERIOR ELEVATIONS

SCALE: 3/8" = 1'-0"

INTERIOR ELEVATION NOTES:

1. ALL CABINETRY TO BE CLIQSTUDIO "DAYTON" STYLE CABINETS OR EQUAL, WITH PAINTED WHITE FINISH, WITH FULL OVERLAY CABINET DOORS, EUROPEAN STYLE HIDDEN SOFT CLOSE HINGES, SOFT-CLOSE DRAWER HARDWARE.
2. ALL CABINETRY HARDWARE TO BE CLIQSTUDIO "FLORENCE" CUP STYLE PULLS OR EQUAL, FINISH AS SELECTED BY OWNER.
3. FOR ALL COUNTERTOPS AND BACKSPLASHS PROVIED AND ALLOWANCE OF $40.00 PER SQUARE FOOT FOR MATERIAL ONLY.

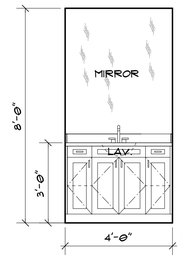

03 POWDER ROOM

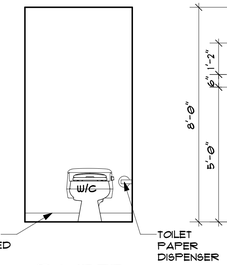

04 POWDER ROOM

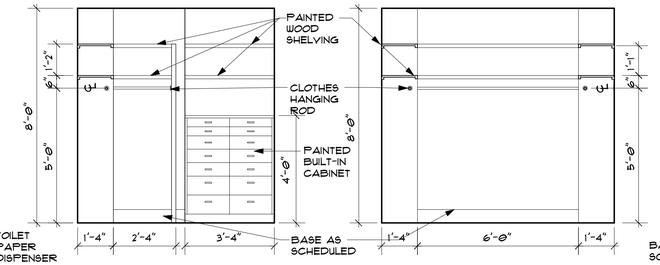

05 MASTER CLOSET

06 MASTER CLOSET

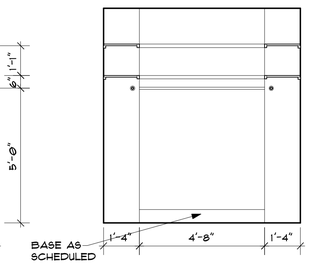

07 MASTER CLOSET

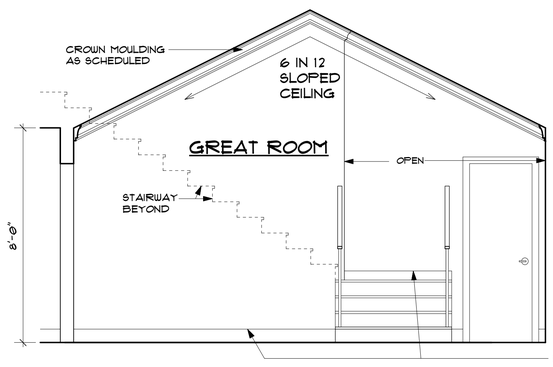

01 STAIRS

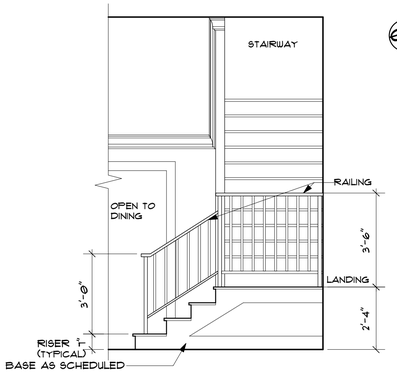

02 STAIRS

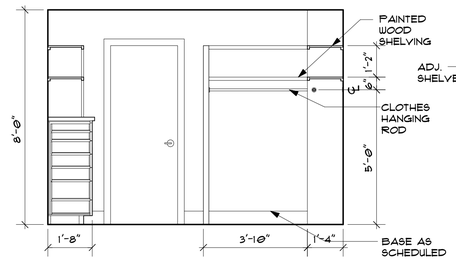

08 MASTER CLOSET

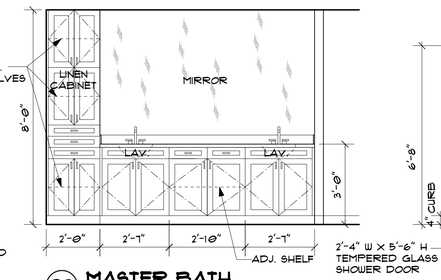

09 MASTER BATH

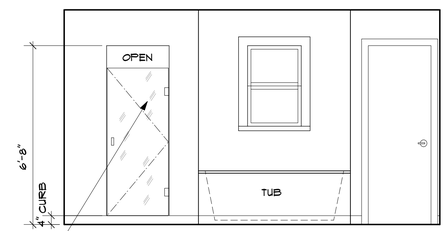

10 MASTER BATH

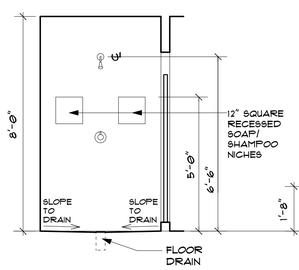

11 MASTER SHOWER

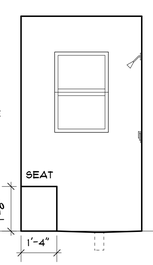

12 MASTER SHOWER

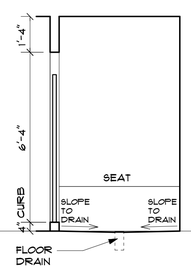

13 MASTER SHOWER

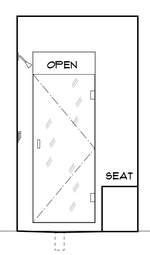

14 MASTER SHOWER

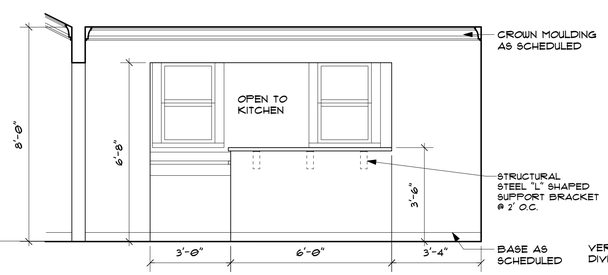

15 KITCHEN ISLAND

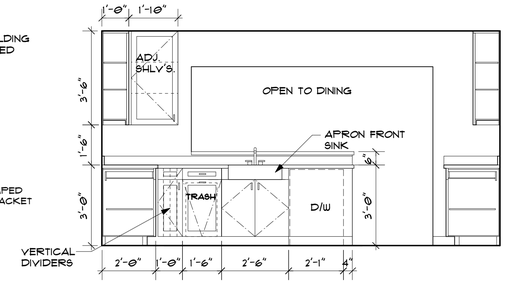

16 KITCHEN

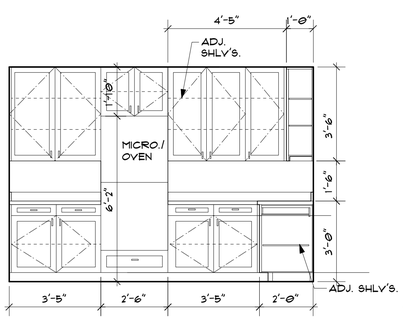

17 KITCHEN

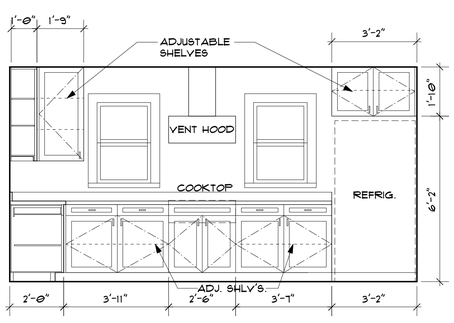

18 KITCHEN

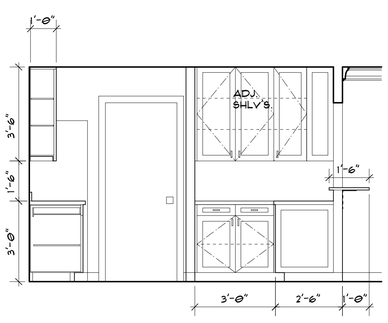

19 KITCHEN

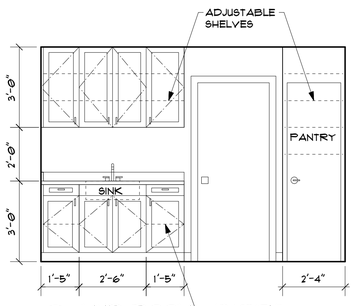

20 MUD ROOM

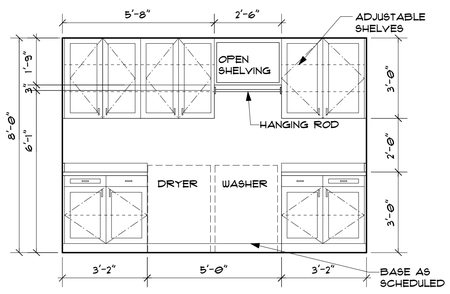

21 MUD ROOM

P·E·C A·I·A

PECAIA, Inc.
159 Case Lane, San Antonio, Texas 78209
phone 210.785.9823
paul@pecaia.com

REGISTERED ARCHITECT PAUL E. CASSETO JR. 13929 STATE OF TEXAS

EXPIRES: 10.31.2018

A NEW CUSTOM RESIDENCE FOR LINDSEY / SABATINO

206 West Lullwood Ave., San Antonio Texas 78212

Revisions

No.	ISSUE	DATE

SUBMITTAL DRAWINGS FOR HDRC FINAL APPROVAL

Drawing Information

Project No.	Date	Scale
2017.1501	08.24.18	

Drawing No.

A-5.01

INTERIOR ELEVATIONS

SCALE: 3/8" = 1'-0"

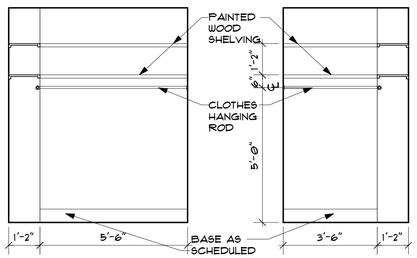

01 BEDROOM #1 CLOSET

02 BEDROOM #1 CLOSET

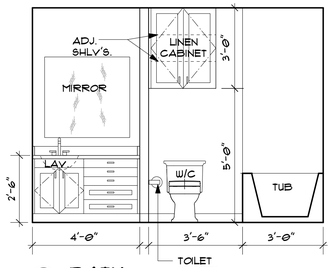

03 BATH

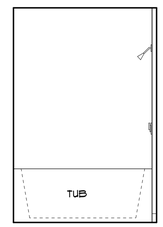

04 BATH

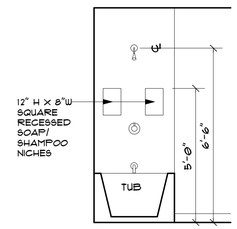

05 BATH

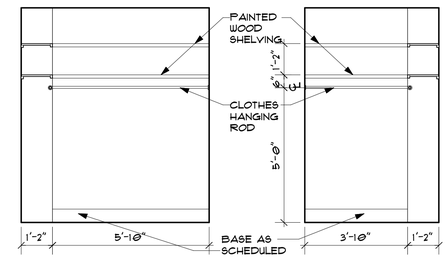

06 BEDROOM #1 CLOSET

07 BEDROOM #1 CLOSET

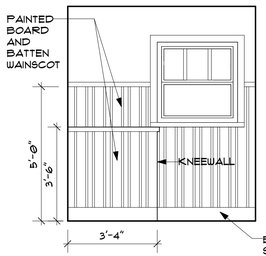

08 CARRIAGE HOUSE STAIR LANDING

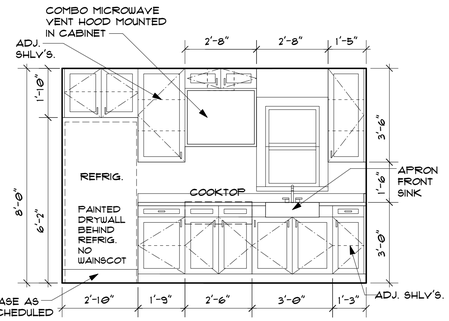

09 CARRIAGE HOUSE KITCHEN

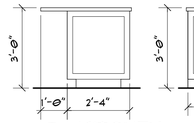

12 KITCHEN ISLAND

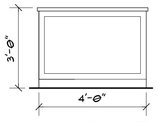

13 KITCHEN ISLAND

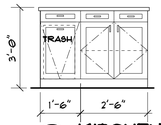

10 KITCHEN ISLAND

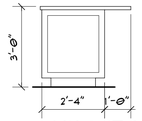

11 KITCHEN ISLAND

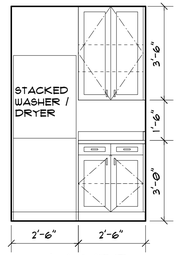

14 LAUNDRY

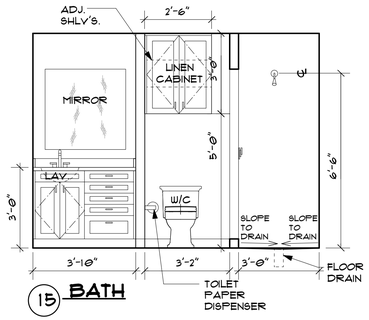

15 BATH

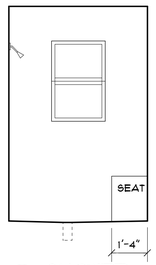

16 SHOWER

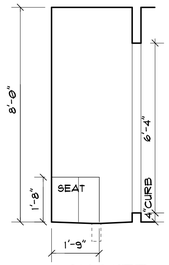

17 SHOWER

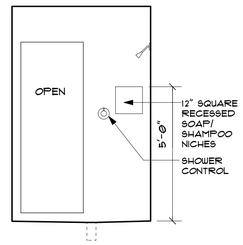

18 SHOWER

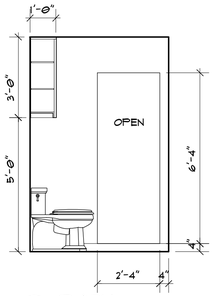

19 BATH

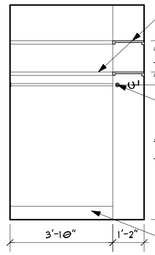

20 CLOSET PANTRY

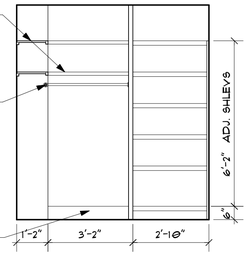

21 CLOSET PANTRY

P·E·C A·I·A

PECAIA, Inc.
159 Case Lane, San Antonio, Texas 78209
phone 210.785.9823
paul@pecaia.com

REGISTERED ARCHITECT PAUL E. CASSEB JR. 13939 STATE OF TEXAS

EXPIRES: 10.31.2018

A NEW CUSTOM RESIDENCE FOR LINDSEY / SABATINO

206 West Lullwood Ave., San Antonio Texas 78212

Revisions

No.	ISSUE	DATE

SUBMITTAL DRAWINGS FOR HDRC FINAL APPROVAL

Drawing Information

Project No.	Date	Scale
2017.1501	08.24.18	

Drawing No.

A-5.02

DOOR SCHEDULE

DOOR NO.	WIDTH	HEIGHT	THICKNESS	THRESHOLD	DOOR MATL.	GLAZING	FRAME	HARDWARE	PASSAGE TYPE	REMARKS
01	8'0"	7'0"		NONE		NONE			GARAGE DOOR OPENER	O.H. GARAGE DOOR W/ GARAGE DOOR OPENER
02	"	"		"		"			"	"
03	"	"		"		"			"	"
04	2'6"	6'8"	1 3/4"	"		"			KEYED/DEADBOLT	
05	2'8"	"	"	"		"			"	
06	"	"	1 3/4"	EXTERIOR		YES			"	NOTE 1
07	"	"	"	"		"			"	
08	"	"	1 3/8"	NONE		NONE			PASSAGE	POCKET DOOR
09	"	"	1 3/4"	EXTERIOR		YES			FIXED UNIT	STATIONARY DOOR UNIT NOTE 1
10	"	"	"	"		"			FIXED UNIT	STATIONARY DOOR UNIT NOTE 1
11	"	"	"	"		"			KEYED/DEADBOLT	
12	2'6"	"	1 3/8"	NONE		NONE			PASSAGE	
13	2'8"	"	"	"		"			PRIVACY	
14	2'6"	"	"	"		"			"	
15	2'4"	"	"	"		"			"	
16	2'6"	"	"	"		"			PASSAGE	
17	2'4"	"	"	"		"			"	
18	"	"	"	"		"			PRIVACY	
19	3'6"	"	1 3/4"	EXTERIOR		YES			KEYED/DEADBOLT	SIMPSON #4961 "TRADITIONAL" ENTRY DOOR
20	2'4"	"	1 3/8"	NONE		NONE			PASSAGE	
21	2'8"	"	"	"		"			PRIVACY	
22	"	"	"	EXTERIOR		"			PASSAGE	
23	2'6"	"	"	NONE		NONE			PRIVACY	
24	2'8"	"	"	"		"			"	
25	2'4"	"	"	"		"			PASSAGE	
26	2'8"	"	"	"		"			KEYED/DEADBOLT	
27	"	"	"	"		"			PASSAGE	
28	2'6"	"	"	"		"			PRIVACY	
29	2'4"	"	"	"		"			PASSAGE	
28	2'8"	"	"	"		"			PRIVACY	

DOOR NOTES

1. JELD-WEN 2500 SERIES CLAD DOORS OR EQUAL

WINDOW SCHEDULE

WINDOW TYPE	CONFIG.	WIDTH	HEIGHT	FRAME MATL	MANUF.	REMARKS
A	DOUBLE HUNG	3'0"	4'0"	CLAD	JELD-WEN	EXTERIOR COLOR "DESERT SAND"
B	DOUBLE HUNG	3'0"	5'0"	"	"	"
C	FIXED GLASS	3'0"	1'6"	"	"	"
D	DOUBLE HUNG	PR 3'0"	5'0"	"	"	"
E	DOUBLE HUNG	2'0"	3'0"	"	"	"

WINDOW NOTES

1. JELD-WEN 3500 SERIES CLAD DOUBLE PANE WINDOWS OR EQUAL.
2. ALL WINDOW SCREENS TO BE WOOD FRAMED, PAINTED TO MATCH WINDOW COLOR.

PLUMBING FIXTURE SCHEDULE

POWDER ROOM #103
LAVATORY - $200.00 ALLOWANCE
FAUCET - $150.00 ALLOWANCE
TOILET - AMERICAN STANDARD, CHAMPION, PORTSMOUTH PRO RIGHT HEIGHT, ELONGATED, WHITE #213AA.104.020

KITCHEN #113
SINK - IKEA "DOMSJÖ" SINGLE BOWL APRON FRONT, WHITE #591.581.78
FAUCET - KOHLER "SOUS" PULL-DOWN KITCHEN SINK FAUCET, #K-R10651-SD, VIBRANT STAINLESS FINISH (VS)
GARBAGE DISPOSER - INSINKERATOR EVOLUTION COMPACT, 3/4 HP, CONTINUOUS FEED

MUD ROOM #114
SINK - $200.00 ALLOWANCE
FAUCET - $150.00 ALLOWANCE

SHOWER #110
SHOWER HEAD - $150.00 ALLOWANCE
HAND SET - $150.00 ALLOWANCE

MASTER BATH #109 / TOILET ROOM #108
BATHTUB - $1,500.00 ALLOWANCE
BATHTUB FAUCET - $200.00 ALLOWANCE
LAVATORIES - $200.00 ALLOWANCE PER LAVATORY
LAVATORY FAUCETS - $150.00 ALLOWANCE PER FAUCET
TOILET - AMERICAN STANDARD, CHAMPION, PORTSMOUTH PRO RIGHT HEIGHT, ELONGATED, WHITE #213AA.104.020

BATH #205
LAVATORY - $200.00 ALLOWANCE
LAVATORY FAUCET - $100.00 ALLOWANCE
SHOWER HEAD - $100.00 ALLOWANCE
SHOWER HANDSET - $100.00 ALLOWANCE
BATHTUB - $1,000.00 ALLOWANCE
TOILET - AMERICAN STANDARD, CHAMPION, PORTSMOUTH PRO RIGHT HEIGHT, ELONGATED, WHITE #213AA.104.020

CARRIAGE HOUSE KITCHEN #210
SINK - IKEA "DOMSJÖ" SINGLE BOWL APRON FRONT, WHITE #591.581.78
FAUCET - KOHLER "SOUS" PULL-DOWN KITCHEN SINK FAUCET, #K-R10651-SD, VIBRANT STAINLESS FINISH (VS)
GARBAGE DISPOSER - INSINKERATOR EVOLUTION COMPACT, 3/4 HP, CONTINUOUS FEED

CARRIAGE HOUSE BATH #214
LAVATORY - $200.00 ALLOWANCE
LAVATORY FAUCET - $100.00 ALLOWANCE
SHOWER HEAD - $100.00 ALLOWANCE
SHOWER HANDSET - $100.00 ALLOWANCE
TOILET - AMERICAN STANDARD, CHAMPION, PORTSMOUTH PRO RIGHT HEIGHT, ELONGATED, WHITE #213AA.104.020

NOTE: ALL ALLOWANCE ITEMS ARE FOR MATERIALS ONLY.

APPLIANCE SCHEDULE

KITCHEN #113
REFRIGERATOR - GE "PROFILE" 36" WIDE, STAINLESS STEEL
COOKTOP - GE "PROFILE", 30" WIDE 4-BURNER ELECTRIC COOKTOP, RADIANT HEAT ELEMENTS, GLASS SURFACE
VENTHOOD - GE 30" WIDE CONVERTIBLE RANGE HOOD, STAINLESS STEEL, DUCTED TO OUTSIDE THRU WALL
OVEN / MICROWAVE - GE "PROFILE", COMBINATION OVEN/MICROWAVE CONVECTION WALL MOUNT STAINLESS STEEL
DISHWASHER - GE, "PROFILE", 24" WIDE STAINLESS STEEL INTERIOR, WITH HIDDEN CONTROLS

MUD ROOM #114
WASHER - GE, 27" WIDE FRONT LOAD, WHITE
DRYER - GE 27" WIDE FRONT LOAD HIGH EFFICENCY GAS DRYER, WHITE, VENT DUCTED TO OUTSIDE WALL

CARRIAGE HOUSE KITCHEN #210
REFRIGERATOR - IKEA "NUTID" 29" WIDE, FRENCH DOOR, STAINLESS STEEL
COMINATION CONVECTION MICROWAVE / VENTHOOD - GE, "PROFILE", 1.7 CUBIC FEET, 30" WIDE, STAINLESS STEEL DUCTED TO OUTSIDE THRU ROOF
COOKTOP - GE, "PROFILE", 30" WIDE 4-BURNER ELECTRIC COOKTOP, RADIANT HEAT ELEMENTS, GLASS SURFACE

CARRIAGE HOUSE LAUNDRY #211
STACKED WASHER / DRYER - GE, "SPACEMAKER", 27" WIDE WASHER, ELECTRIC DRYER, WHITE

ROOM FINISH SCHEDULE

ROOM NO./NAME	FLOOR	BASE	WALLS	CEILING	CLG. HEIGHT	REMARKS
001 / FRONT PORCH	F1	NONE	W1	C7	VARIES	PAINTED WOOD SOFFIT
002/ COVERED PORCH	"	"	W7	"	"	"
003 / COVERED PORCH	"	"	W7	"	"	"
101 / ENTRY VESTIBULE	F2	B1	W4	C5, C6	VARIES	
102 / GREAT ROOM	"	"	"	"	"	
103 / POWDER ROOM	"	"	W5	C2	8'0"	
104 / COATS	"	"	"	"	"	
105 / STAIRS	F5	"	"	"	VARIES	
106 / UNDERSTAIR STORAGE	F2	B2	"	"	"	
107 / MASTER CLOSET	"	"	"	"	8'0"	
108 / TOILET ROOM	"	B1	"	"	"	
109 / MASTER BATH	"	"	"	C5	"	
110 / SHOWER	F3	NONE	W6	C2	"	
111 / MASTER BEDROOM	F2	B2	W4	C5	"	
112 / DINING ROOM	"	B1	"	C5, C6	"	
113 / KITCHEN	"	"	"	C5	"	
114 / MUD ROOM	"	B2	"	C2	"	
115 / 3 - CAR GARAGE	F4	B1	"	"	"	
116 / UNDERSTAIR STORAGE	"	"	"	"	VARIES	
117 / VESTIBULE	F2	"	"	"	"	
118 / STAIRS	F5	"	"	"	"	
201 / BEDROOM #1	F6	B3	W4	C2	8'0"	
202 / CLOSET	"	B1	"	"	"	
203 / MECHANICAL	F7	"	"	"	"	
204 / GAME ROOM	F6	B3	"	"	"	
205 / BATH	F2	B2	"	"	8'0"	
206 / CLOSET	"	"	"	"	"	
207 / BEDROOM #2	"	"	"	C5	"	
208 / VESTIBULE	"	"	W4	C5, C6	"	
209 / LIVING AREA	"	"	"	"	"	
210 / KITCHEN	"	"	"	"	"	
211 / LAUNDRY	F2	B2	W4	C3	8'0"	
212 / HALL	F6	B3	"	C5, C6	"	
213 / BATH	F2	B2	W4	C3	"	
214 / SHOWER	F3	NONE	W6	C2	"	
215 / CLOSET	F6	B3	W4	C5	"	
216 / BEDROOM	"	"	"	"	"	

ROOM FINISH NOTES

FLOORING:
F1. SALT FINISH CONCRETE.
F2. 16" SQUARE SLATE, COLOR AS SELECTED BY OWNER.
F3. 1" SQUARE SLATE, COLOR AS SELECTED BY OWNER.
F4. EPOXY, STONE GRAY COLOR.
F5. WOOD TREADS, AND RISERS, STAINED, COLOR GRAY #271 MINWAX, OR EQUAL.
F6. 1" X 8" WOOD PLANK FLOORING, STAINED, COLOR GRAY #271 MINWAX, OR EQUAL.
F7. PLYWOOD FLOOR.

BASE:
B1. 1" X 6" WOOD BASE, PAINTED SEMI-GLOSS "PURE WHITE"
B2. 4" HIGH SLATE, COLOR AS SELECTED BY OWNER.
B3. 1" X 6" WOOD BASE WITH 1' QUATER ROUND PAINTED SEMI-GLOSS "PURE WHITE"

WALLS:
W1. STUCCO VENEER, COLOR TO BE PAINTED EGGSHELL "BABY TURTLE", 515 BENJAMIN MOORE OR EQUAL
W2. 36" HIGH 1" X 6", AND 1" X 4" BOARD AND BATTEN WAINSCOT PAINTED SEMI-GLOSS "PURE WHITE", DRYWALL ABOVE, SKIP-TROWLEDP PAINTED SATIN "MUD GRAY".
W3. 60" HIGH 1" X 6", AND 1" X 4" BOARD AND BATTEN WAINSCOT PAINTED SEMI-GLOSS "PURE WHITE", DRYWALL ABOVE, SKIP-TROWLED FINISH, COLOR ?????
W4. DRYWALL TO BE SKIP-TROWLED TEXTURE, COLOR ?????
W5. DRYWALL TO BE SKIP-TROWLED TEXTURE, COLOR TO BE "MUD GRAY".
W6. 12" SQUARE SLATE, COLOR AS SELECTED BY OUNER.
W7. STUCCO VENEER, COLOR TO BE PAINTED EGGSHELL "NANTUCKET BREEZE", 521 BENJAMIN MOORE OR EQUAL

CEILINGS:
C1. DRYWALL TO BE SKIP-TROWLED TEXTURE, COLOR TO MATCH MAIN HOUSE TRIM COLOR.
C2. DRYWALL TO BE SKIP-TROWLED TEXTURE, COLOR ?????
C3. DRYWALL TO BE SKIP-TROWLED TEXTURE, COLOR TO BE "MUD GRAY".
C4. DRYWALL TO BE SKIP-TROWLED TEXTURE, COLOR TO BRE "PURE WHITE".
C5. 1" X 6" TONGUE AND GROOVE WOOD PLANKS, WHITE WASH FINISH.
C6. 1" X 6" CROWN MOULDING, PAINTED SEMI-GLOSS "PURE WHITE".
C7. 1" X 4" TONGUE AND GROOVE WOOD, PAINTED EGGSHELL ":ACADIA WHITE" OC-38 BENJAMIN MOORE OR EQUAL

ALL INTERIOR WOOD TRIM TO BE 1" X 4", PAINTED SEMI-GLOSS "PURE WHITE".

DOOR AND WINDOW TYPES

SCALE: 1/4" = 1'-0"

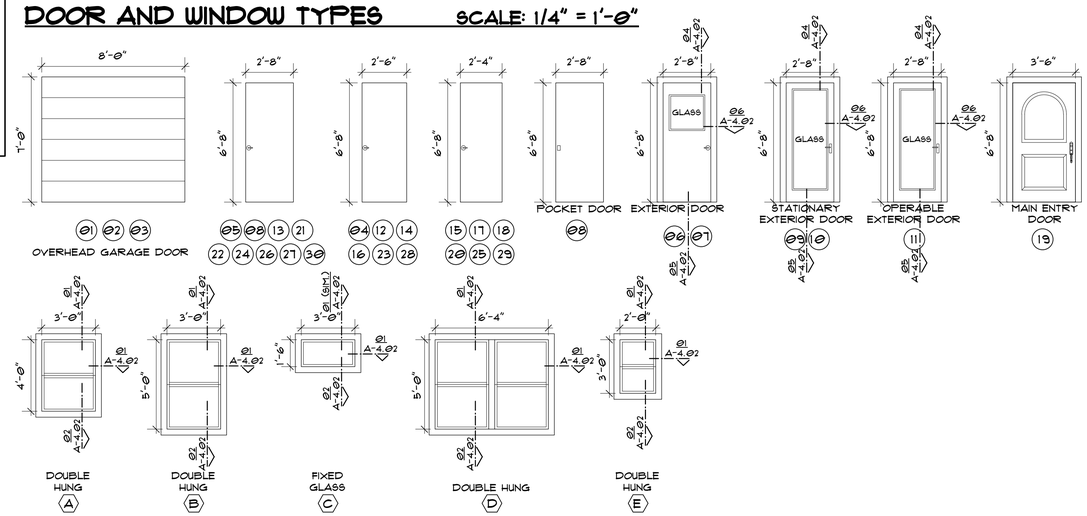

P · E · C
A · I · A
PECAIA, Inc.
159 Case Lane, San Antonio, Texas 78209
phone 210.785.9823
paul@pecaia.com

REGISTERED ARCHITECT PAUL E. CASSETO JR. 13939 STATE OF TEXAS

EXPIRES: 10.31.2018

A NEW CUSTOM RESIDENCE
FOR
LINDSEY / SABATINO
206 West Lullwood Ave., San Antonio Texas 78212

Revisions

No.	ISSUE	DATE

SUBMITTAL DRAWINGS
FOR HDRC
FINAL APPROVAL

Drawing Information

Project No.	Date	Scale
2017.1501	08.24.18	

Drawing No.
A-6.01


SMOOTH


SEMI SMOOTH


SANTA BARBARA

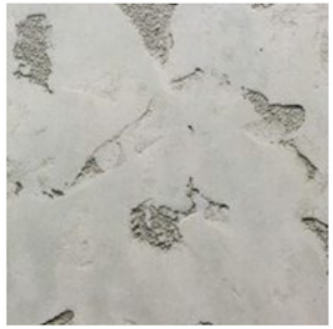
CAT FACES


WET GROOVED PLASTER


FINE SAND


MEDIUM SAND


ROCK N ROLL


20 30 FINE SAND FLOAT


16 20 MEDIUM SAND FLOAT


16 20 HEAVY SAND FLOAT


GLACIER


MONTEREY


LIGHT LACE


HEAVY LACE


ARIZONA

SITELINE WOOD DOUBLE-HUNG WINDOW

Options

View product details for more options

Price Range: $$

Model

Exterior

Grille Designs

Colonial Grille

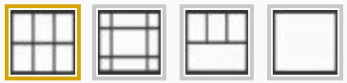

Exterior Color Options

Desert Sand

TABLE OF CONTENTS

GENERAL INFORMATION

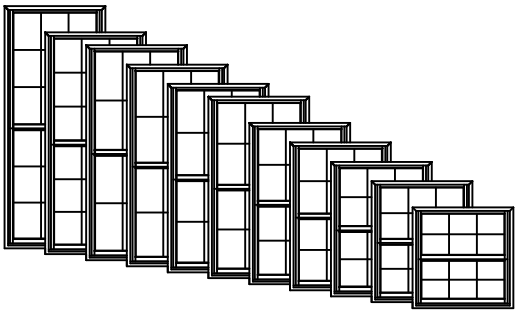

W-3500 Clad Double-Hung windows feature fully operating upper and lower sash. Counterbalancing is achieved with helical spring extension systems hidden in weatherable PVC jambliners. Operating units are supplied with cam-type sash locks installed. There are several hardware finish options. Refer to the Specifications for available finish options.

Multiple Assemblies
W-3500 Clad Double-Hung windows may be mulled beside other clad double-hung or clad picture windows, or below clad transom windows, to fulfill a wide variety of needs.

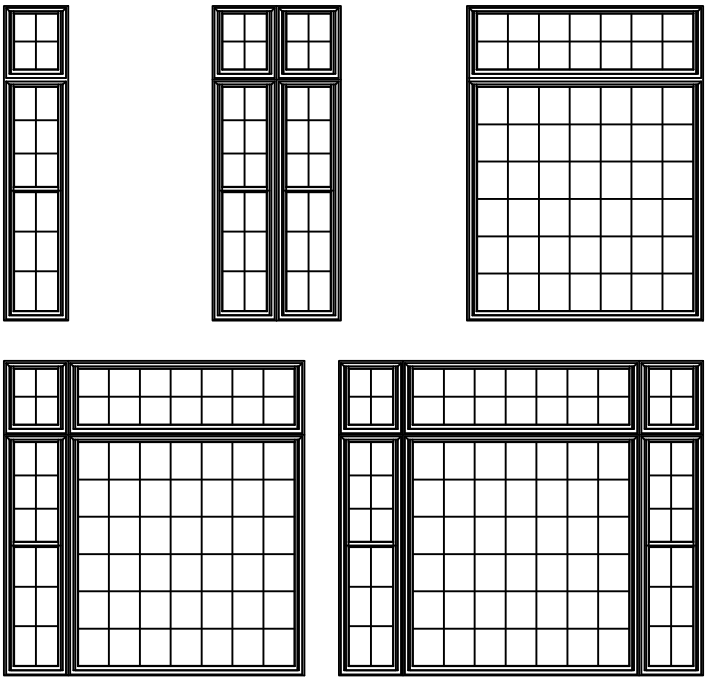

Product specifications may change without notice.
Questions? Consult JELD-WEN customer service.

LITE CUT INFORMATION

W-3500 Clad Double-Hung windows are available with removable grilles in 7/8" Full surround or beaded SDL only, 5/8" flat or 23/32" contour grilles between the glass (GBG) and Simulated Divided Lites. Standard lite cuts are rectangular.

Lite Cut Options

Special lite cut patterns can include a wide variety of straight line and radius patterns. The illustrations shown here represent just a few of the possibilities. Rectangular, horizontal, vertical and Prairie lite patterns are available in all standard size clad double-hung windows. Uneven, diamond, radius and Gothic lite cuts are available, subject to approval. Approvals are based on the ability to fulfill the design requirement while maintaining the construction integrity of the finished product.

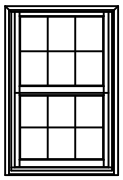
Rectangular

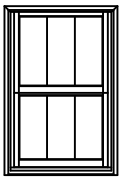
Vertical

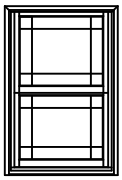
Prairie

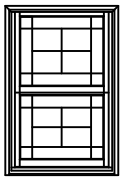
Uneven

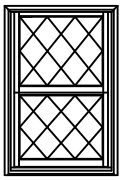
Diamond

Bar Alignment

Alignment of divided lite muntin bars from one window to the next is often required by fine architectural design. Wood grilles, GBG's, and Simulated Divided Lites may be specified with muntin bars aligned.

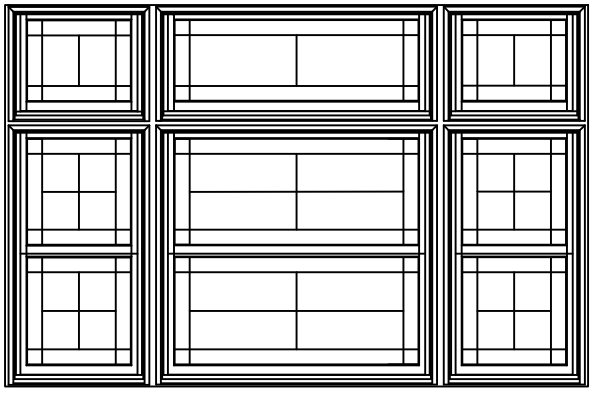

UNIT SIZING

General Notes:

Unit size is always the maximum size of the window with or without trim and does not include the nail fin.

Masonry Opening:

Masonry opening is always 1/2" over the outside of the trim of the window.

Rough Opening:

Rough opening is always 3/4" over frame size of the window.

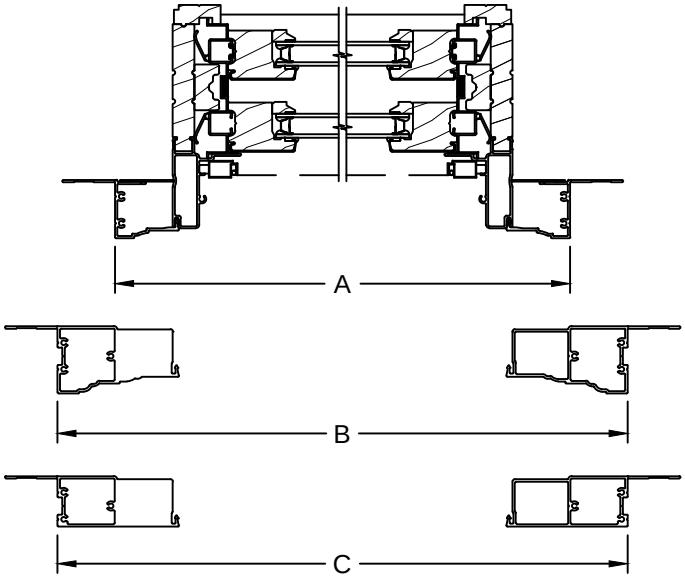

Horizontal exterior trim offerings below are the same with or without sill nose.

Horizontal Sections		
Trim Option	Dimension	Frame +
Brickmould	A	3"
Adams Casing	B	6"
3 1/2" Flat Casing	C	6"

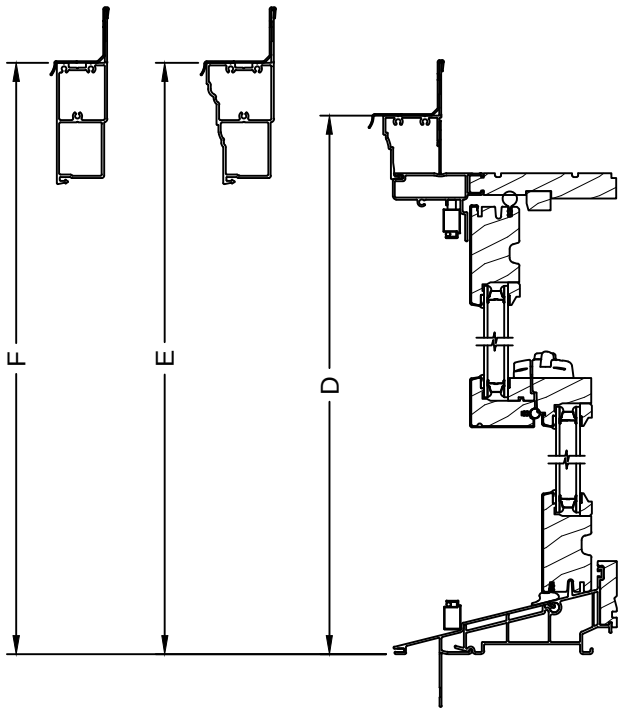

Vertical exterior trim offerings with standard sill nose. Trim on 3 sides.

Vertical Sections (w/ Sill Nose)		
Trim Option	Dimension	Frame +
Brickmould	D	1 1/2"
Adams Casing	E	3"
3 1/2" Flat Casing	F	3"

OPENING FORMULAS

Clear Opening Formulas
Vertical
(Frame Height / 2) - 3 15/16"

Horizontal
Frame Width - 3 9/16"

Daylight Opening Formulas
Vertical
(Frame Height / 2) - 3 5/16"

Horizontal
Daylight Opening = (Frame Width - 5 11/32")

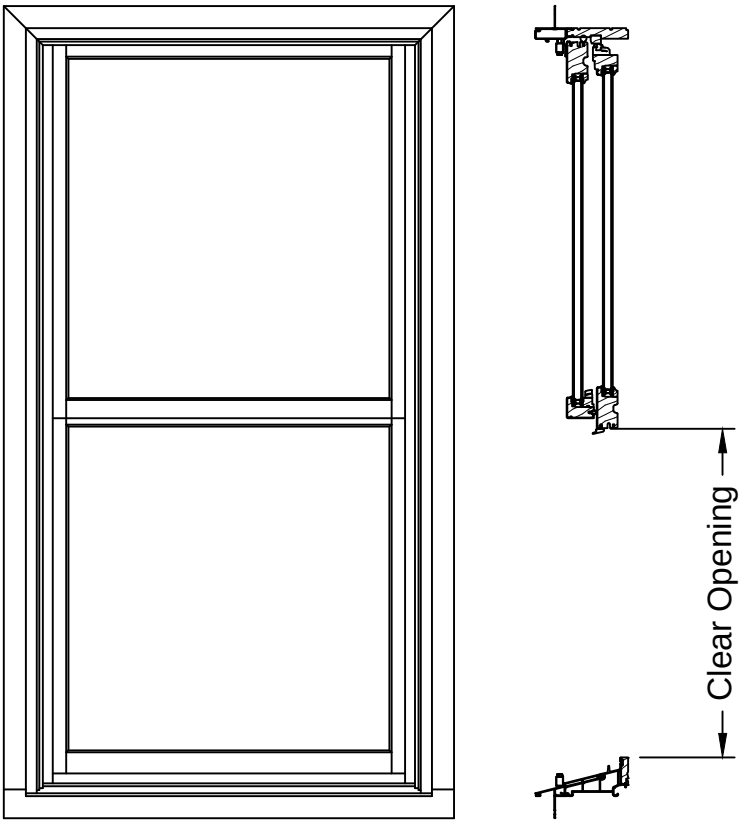

Standard Sash

OPERATION & SASH TILTING

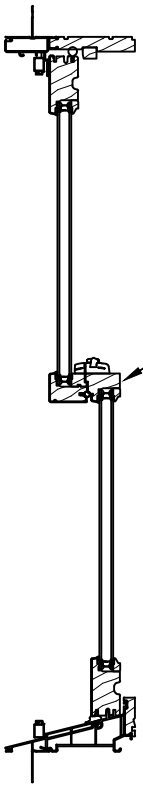

Double-Hung Operation:
When the sash are locked at the check rails the sash are closed and sealed in the sash opening of the frame.

When the sash are unlocked the lower sash travels vertically to any position desired. The upper sash can also be positioned as desired.

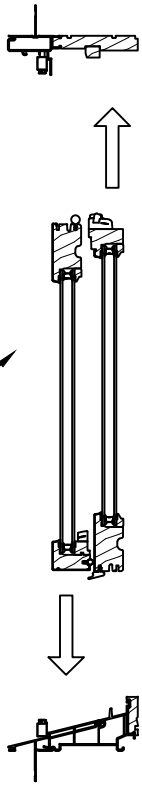

Sash Tilting for Washing
The W-3500 Clad Double-Hung window will allow the sash to be tilted or removed for easy cleaning.

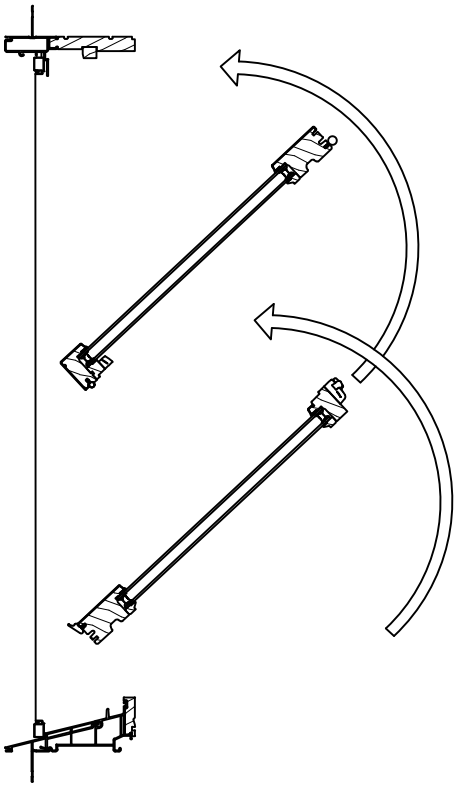

DIVIDED LITE OPTIONS

Operating Grilles

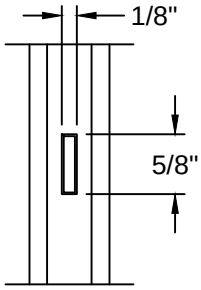

5/8" Grille

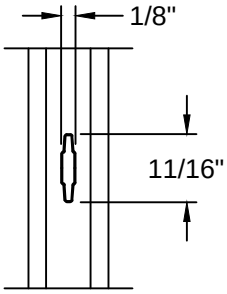

23/32" Grille

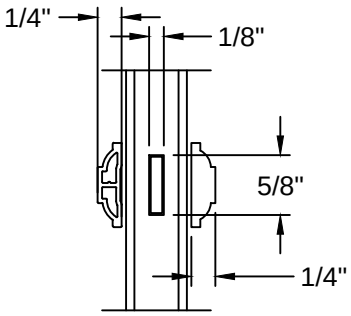

7/8" SDL

Picture Grilles

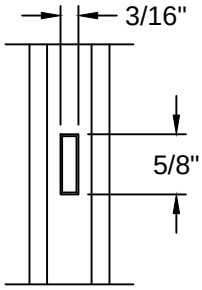

5/8" Grille

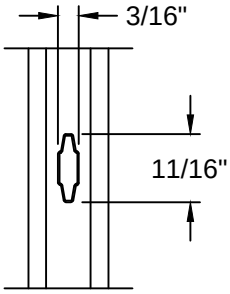

23/32" Grille

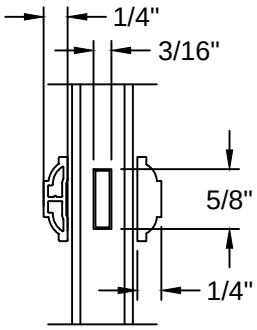

7/8" SDL

GLAZING OPTIONS

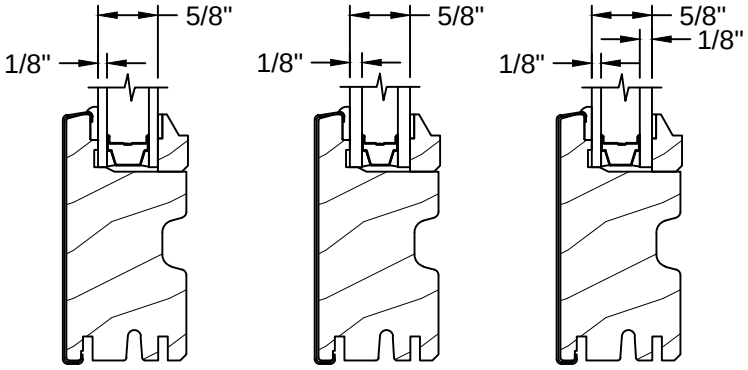

Double-Hung
SS//SS

Double-Hung
DS//DS

Double-Hung
CA Urban Fire Code

JAMB EXTENDER & PREP FOR STOOL OPTIONS

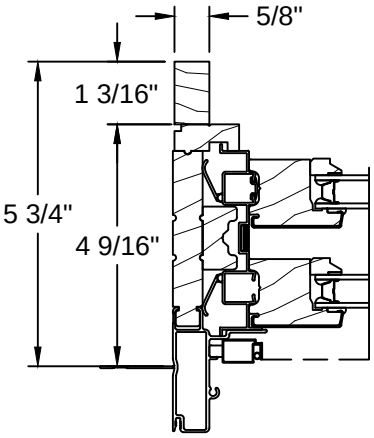

5 3/4" Wall
4/4 (21/32") Jamb Thickness
(Option)

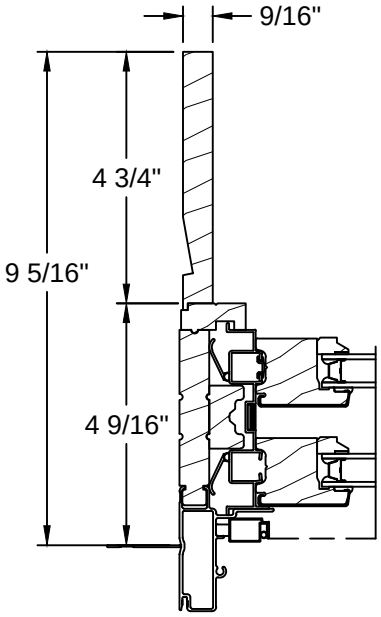

9 5/16" Wall
Max 1-PC
Jamb Extender

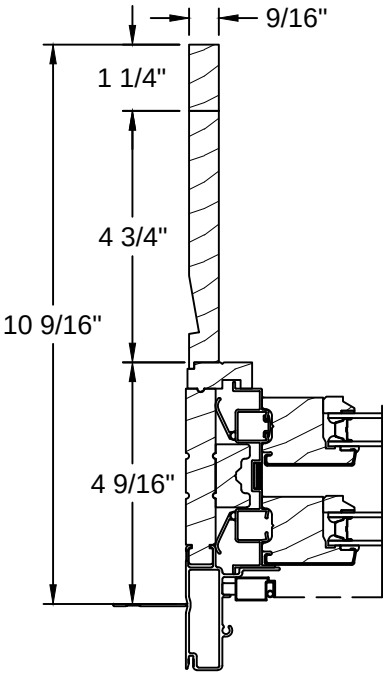

10 9/16" Wall
Max Wall Depth

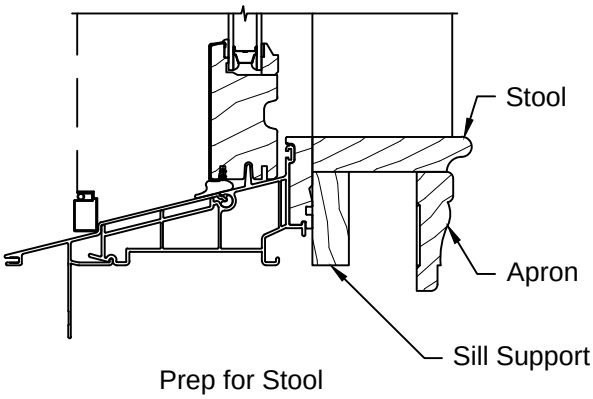

Prep for Stool

Note: Stool, apron, and sill support are applied by trim carpenter after window is installed and are not provided by JELD-WEN.
Unit is shipped without sill jamb extenders.

TRIM & SILL NOSE OPTIONS

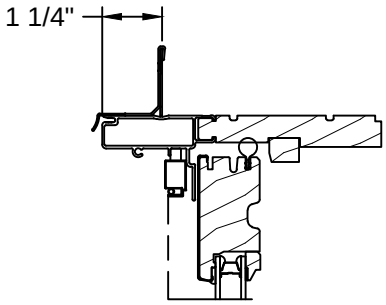

Standard

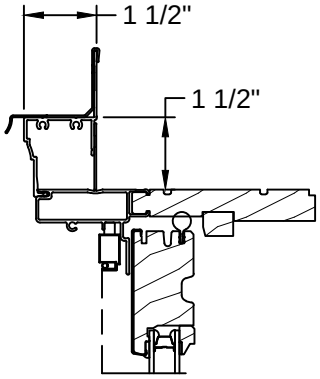

Brickmould

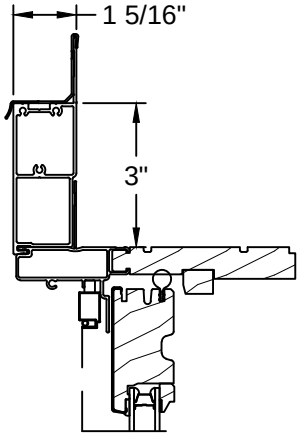

3 1/2"
Flat Casing

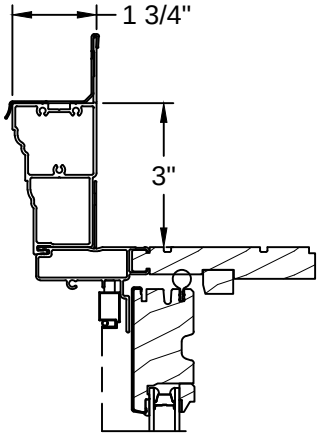

Adams
Casing

Sill Nose Options

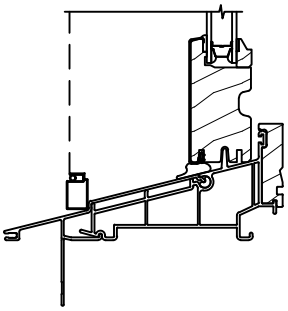

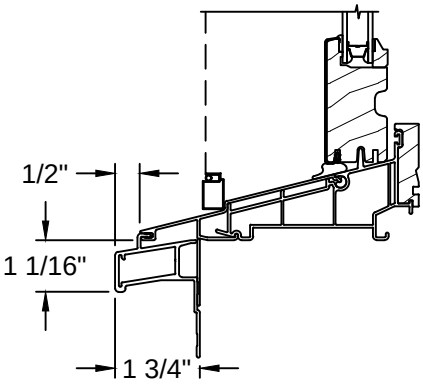

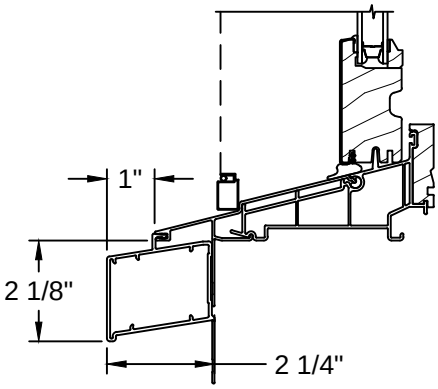

MULLION OPTIONS

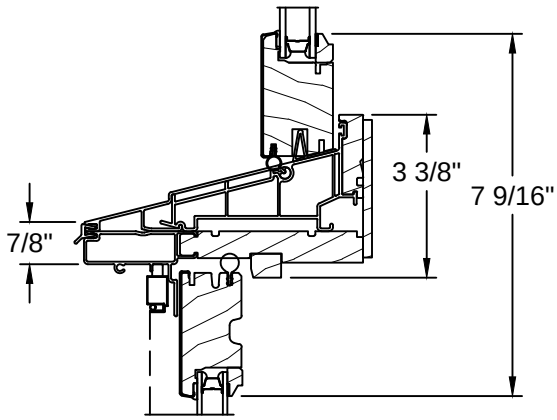

Operating Double-Hung
With In-Sash Picture/Transom

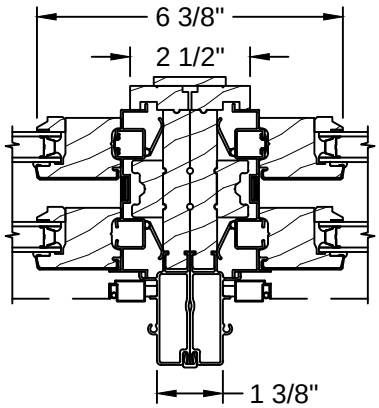

Twin Operating Double-Hung

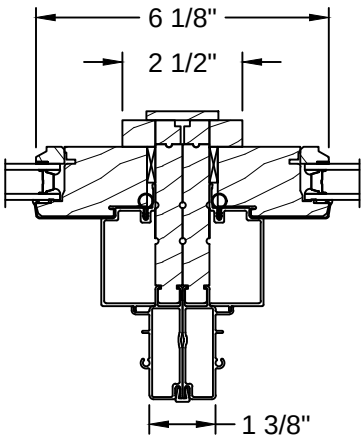

In-Sash Picture/Transom Beside
In-Sash Picture/Transom

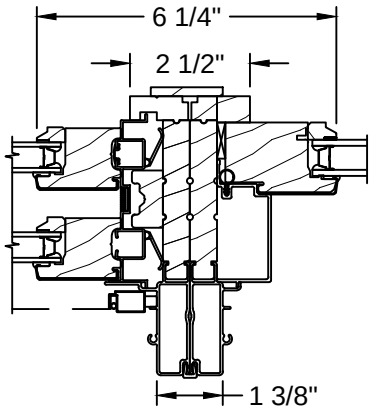

Operating Double-Hung
Beside In-Sash Picture/Transom

MIN-MAX SIZING

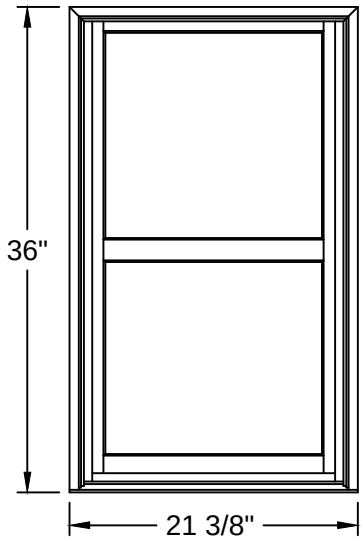

Minimum Configuration

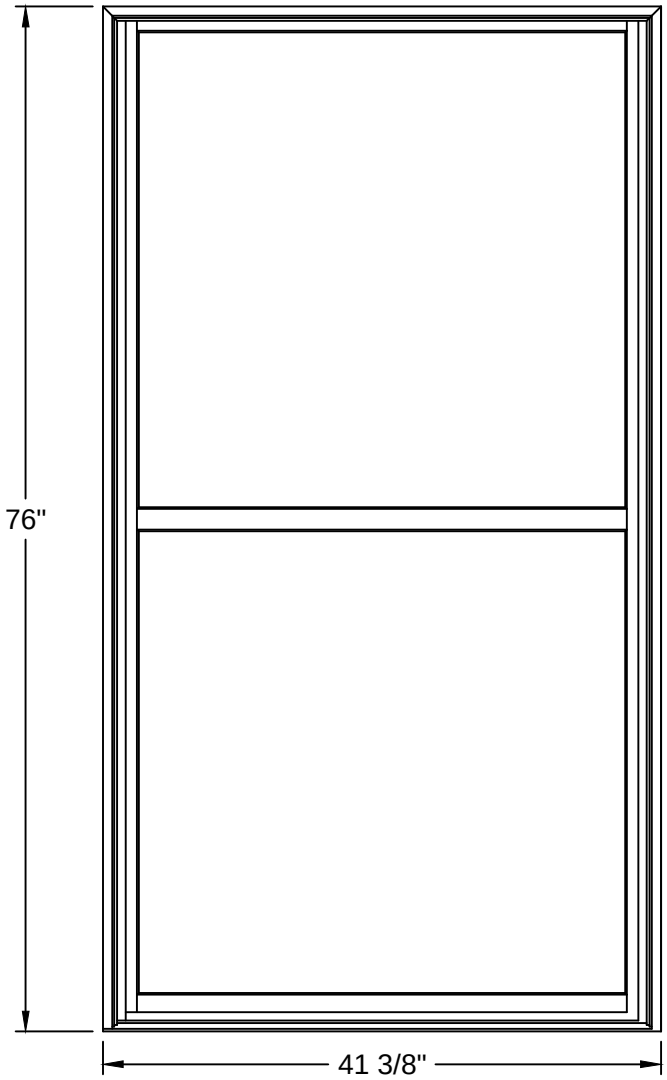

Maximum Configuration

Standard Width				
21 3/8"	25 3/8"	29 3/8"	33 3/8"	41 3/8"

Standard Height				
36"	40"	48"	52"	56"
60"	64"	68"	72"	76"

Nominal Width				
19 1/4"	23 1/4"	27 1/4"	31 1/4"	35 1/4"

Nominal Height				
36 1/4"	41 1/4"	47 1/4"	53 1/4"	59 1/4"
65 1/4"	71 1/4"			

OPERATOR - VERTICAL SECTION

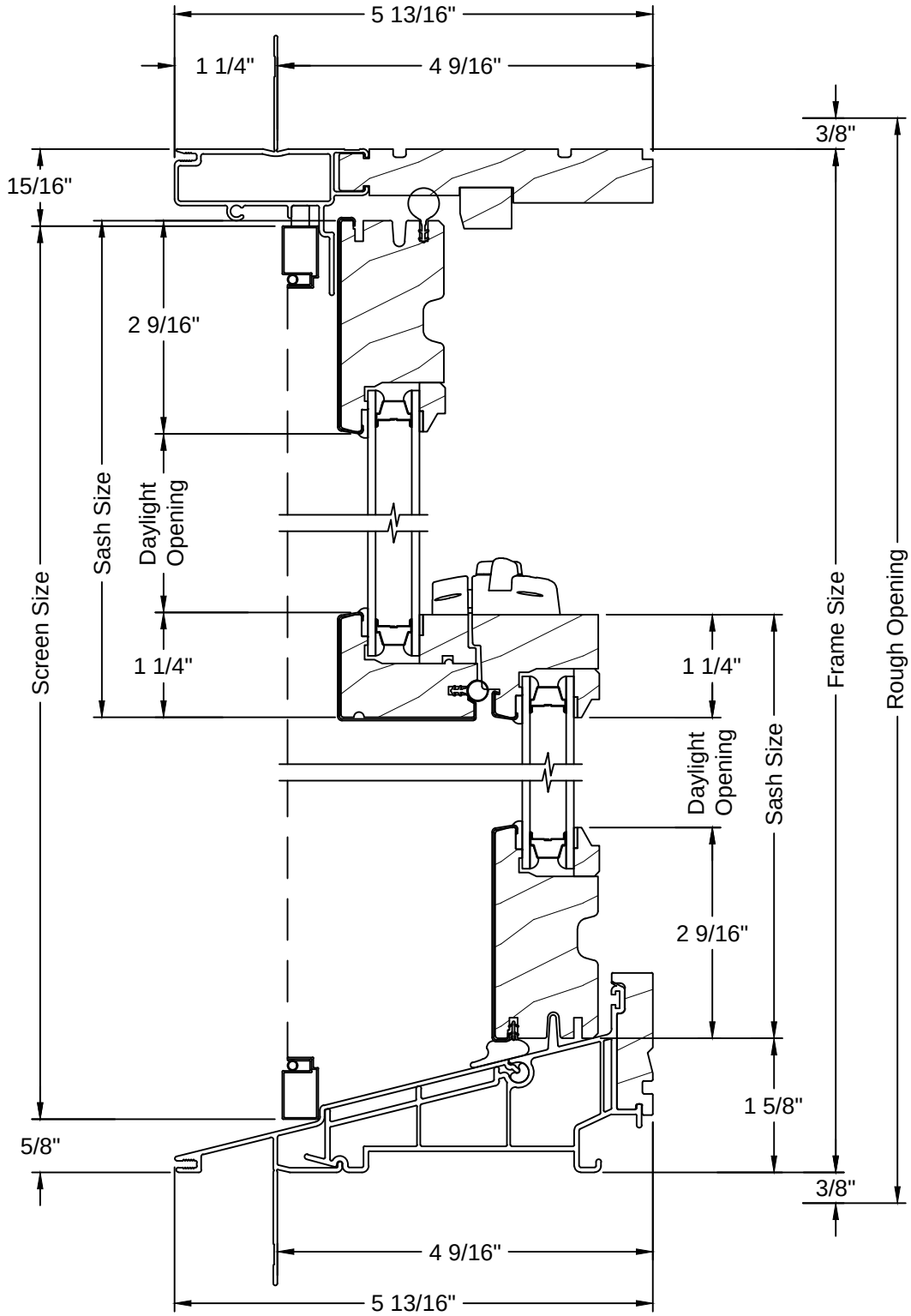

OPERATOR - HORIZONTAL SECTION

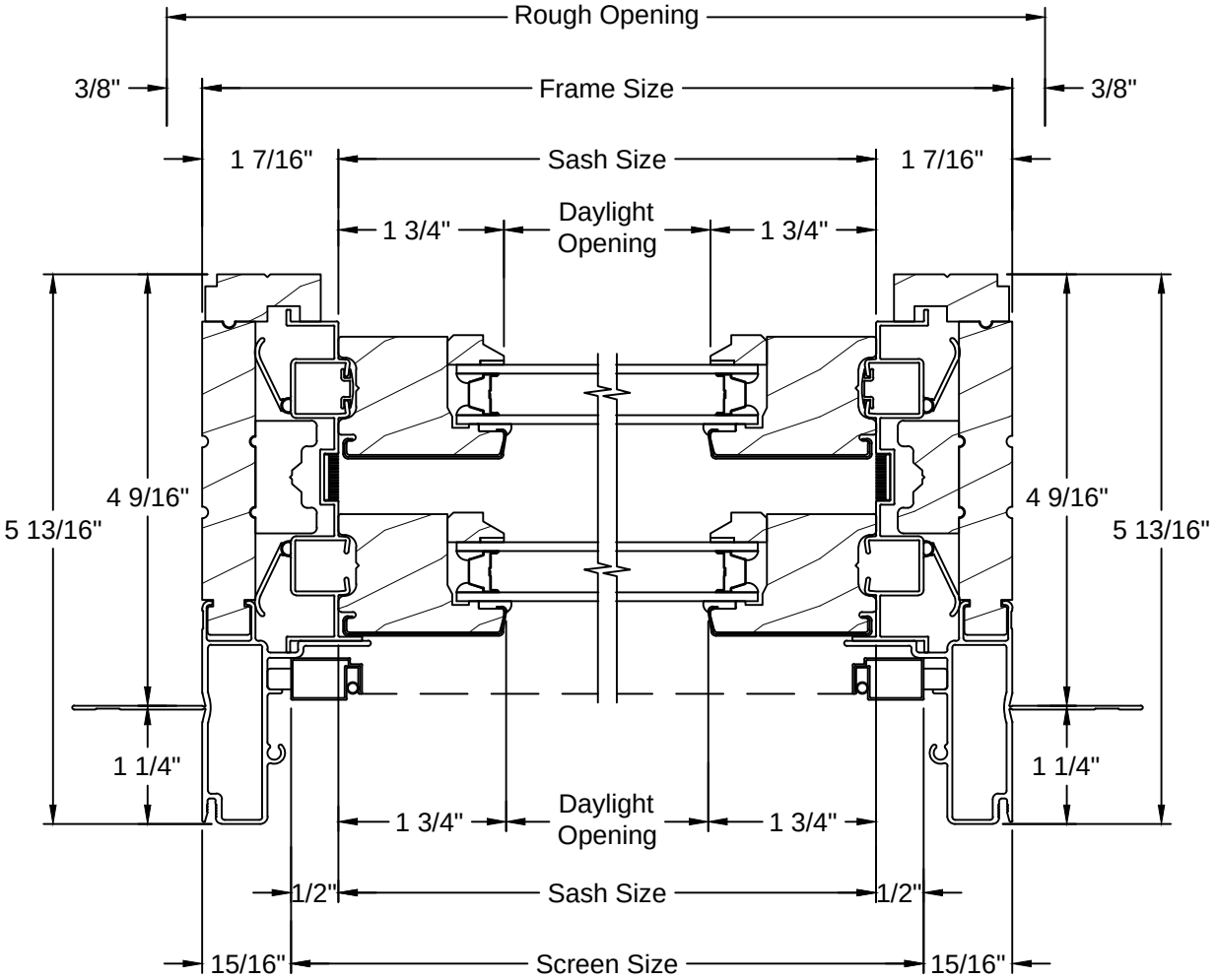

PICTURE - VERTICAL SECTION

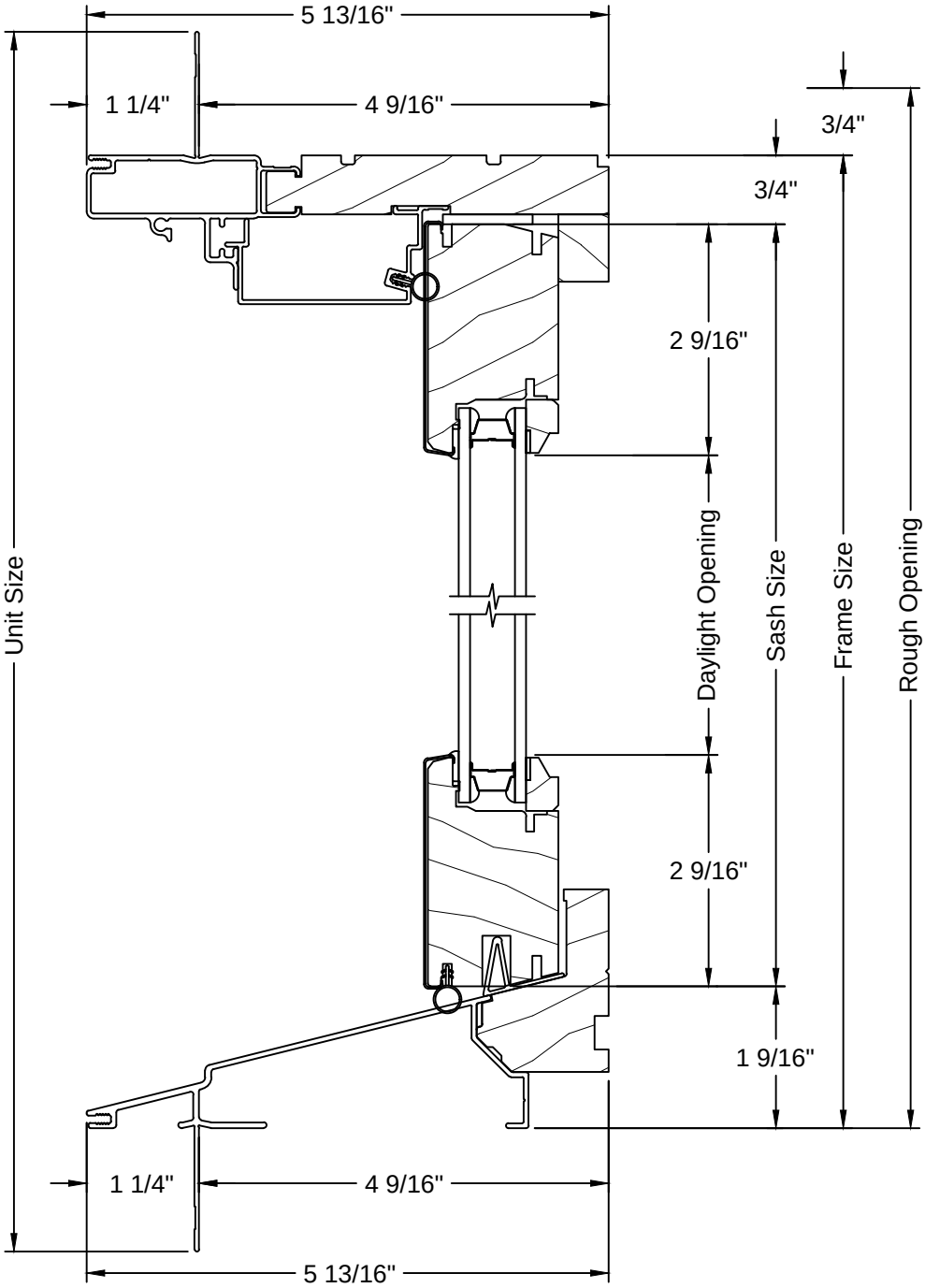

PICTURE - HORIZONTAL SECTION

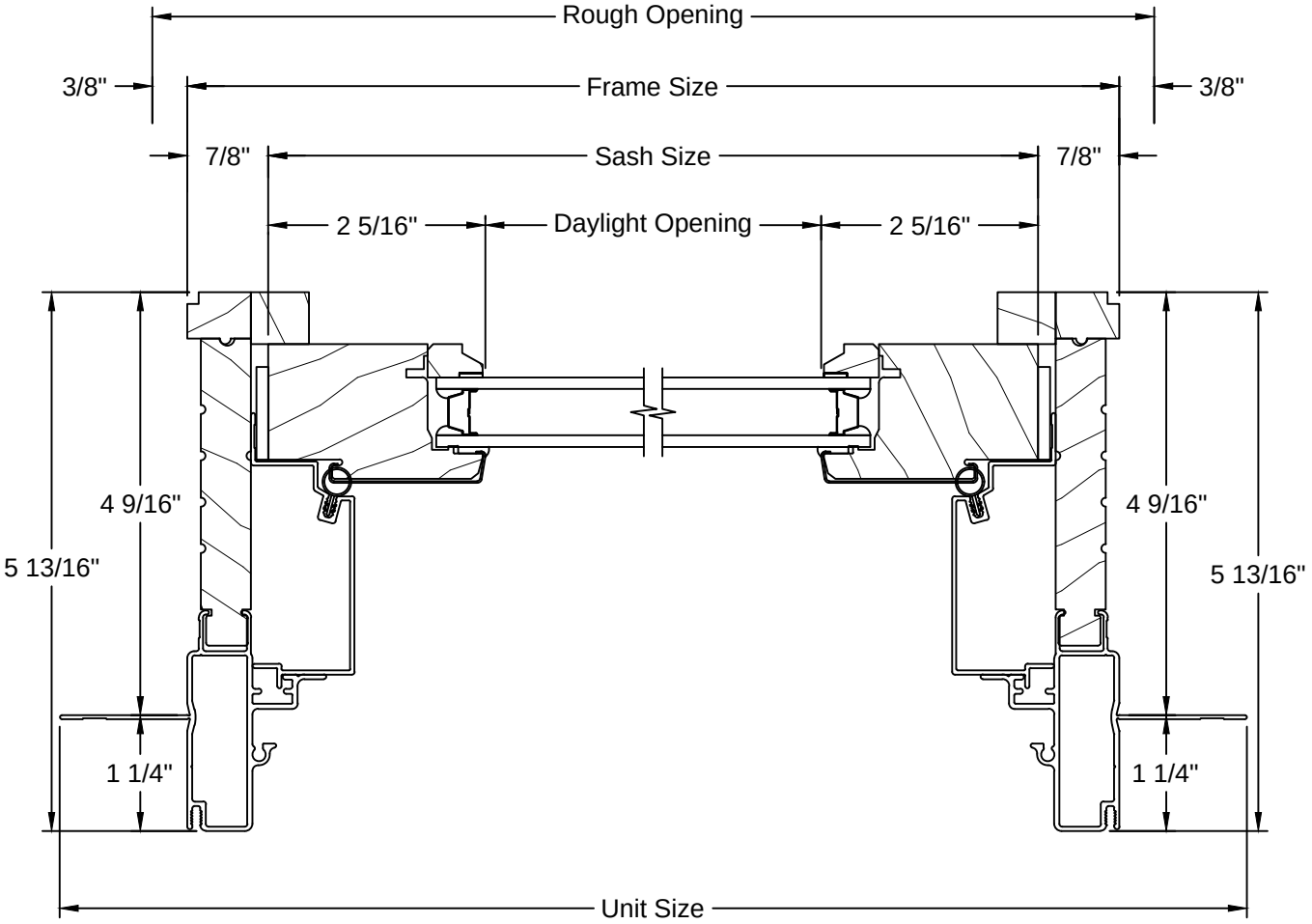

Product specifications may change without notice.
Questions? Consult JELD-WEN customer service.

Scale: 6" = 1' - 0"

POCKET OPERATOR - VERTICAL SECTION

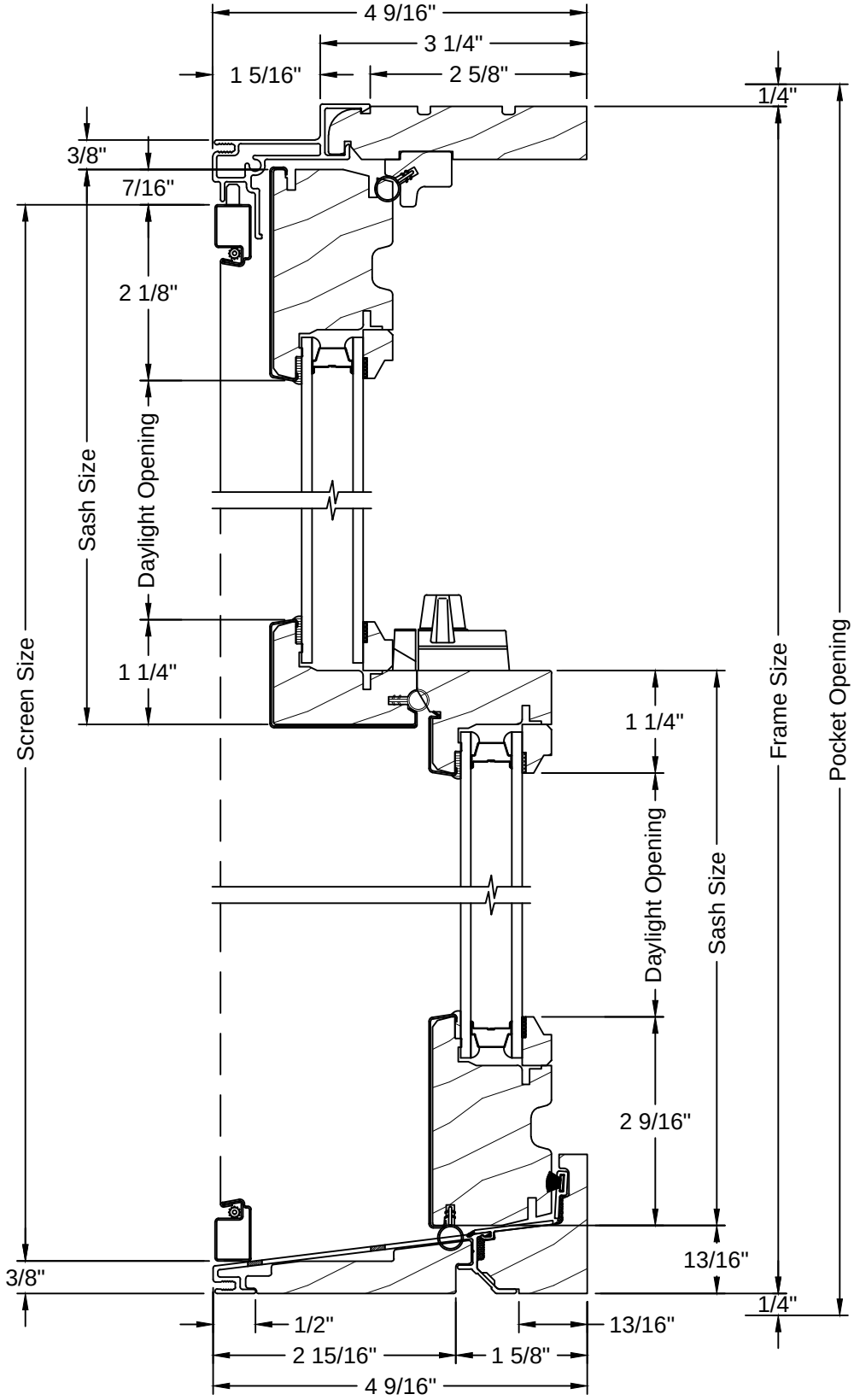

Product specifications may change without notice.
Questions? Consult JELD-WEN customer service.

Scale: 6" = 1' - 0"

POCKET OPERATOR - HORIZONTAL SECTION

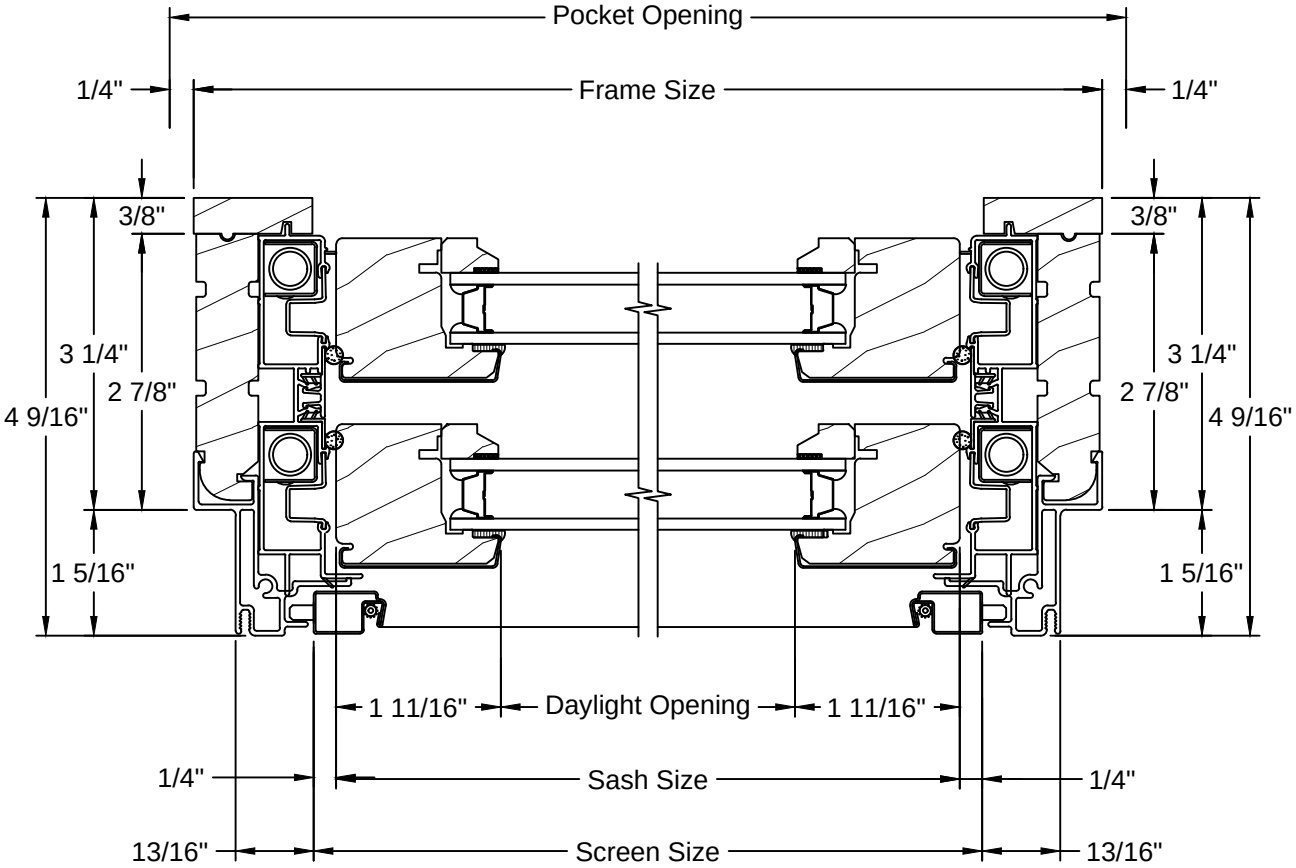

POCKET PICTURE - VERTICAL SECTION

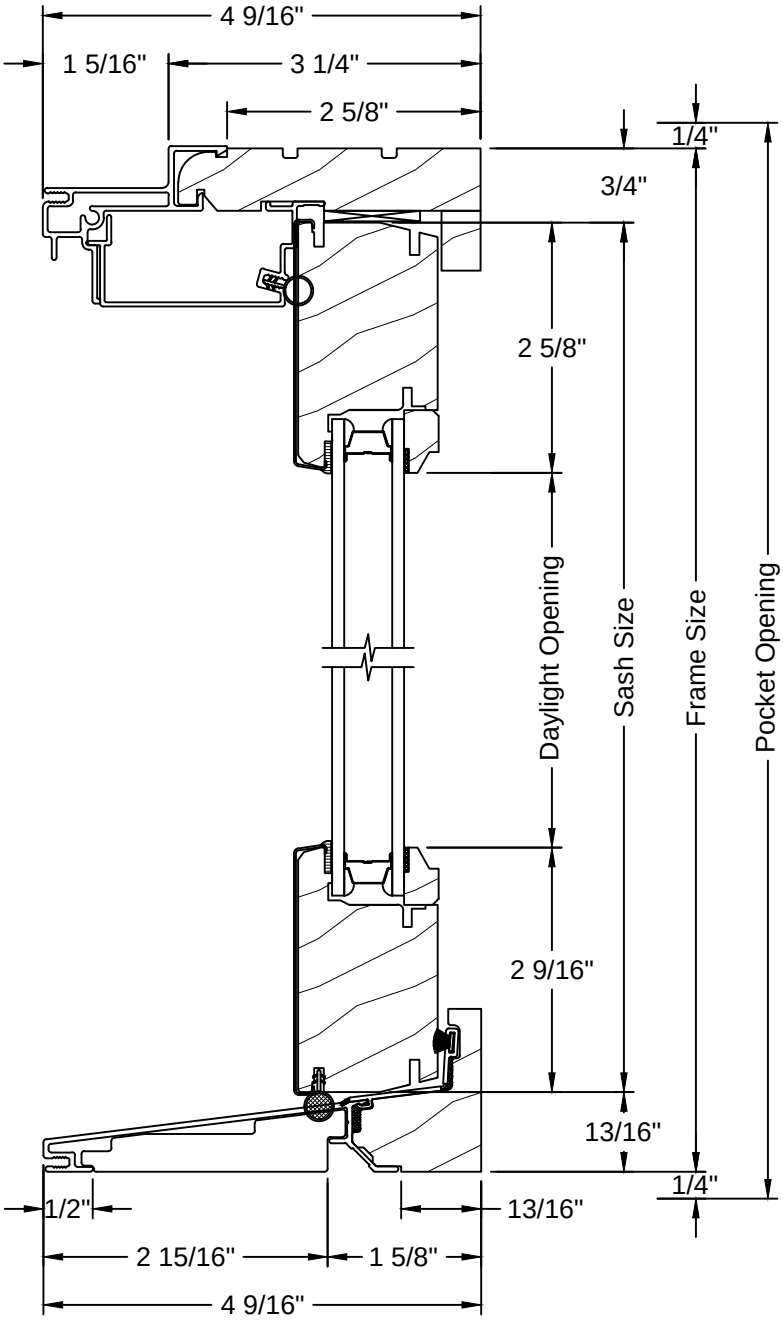

Product specifications may change without notice.
Questions? Consult JELD-WEN customer service.

Scale: 6" = 1' - 0"

POCKET PICTURE - HORIZONTAL SECTION

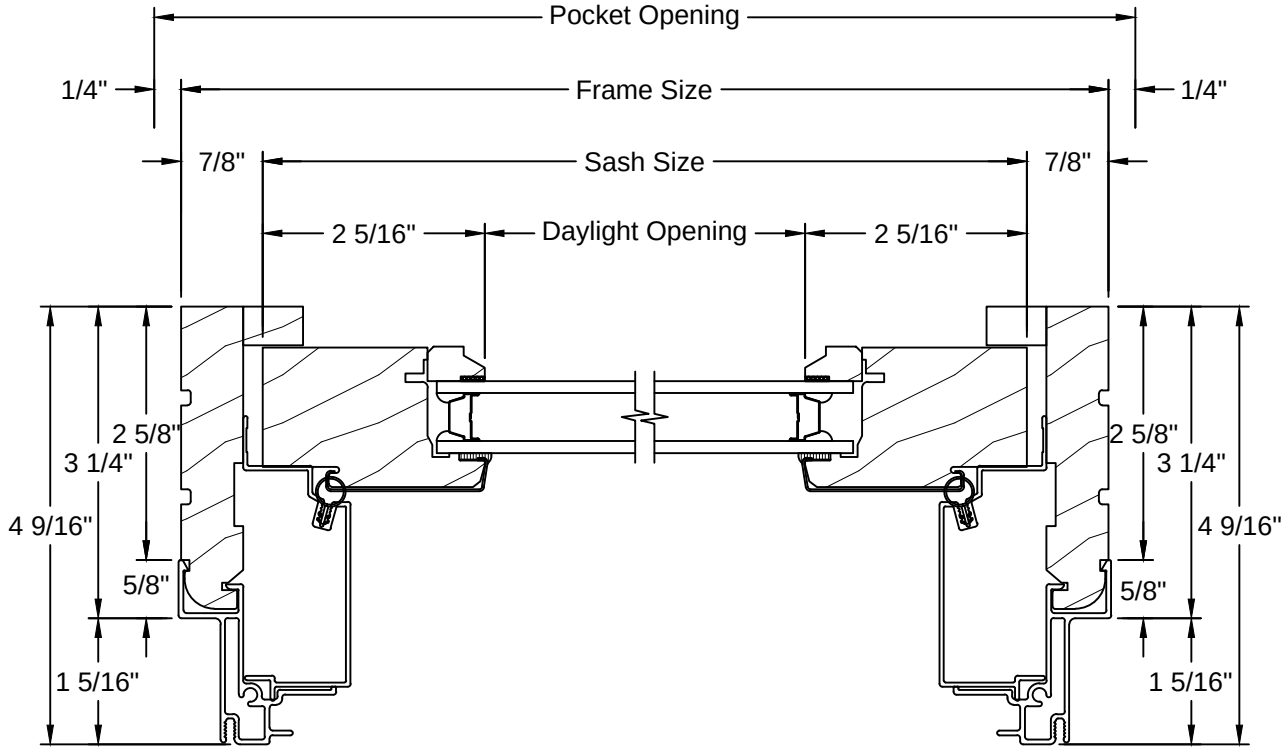

CITY OF SAN ANTONIO
OFFICE OF HISTORIC PRESERVATION

Historic and Design Review Commission
Design Review Committee
Report & Recommendation

DATE: 2/27/2018 HDRC Case#

ADDRESS: 206 W LULLWOOD Meeting Location: OHP

APPLICANT: DENNIS LINDSEY

DRC Members present: GARZA, GUARINO

Staff present: STEPHANIE PHILLIPS

Others present:

REQUEST: NEW CONSTRUCTION OF 2-STORY SINGLE FAMILY HOME AND 2-STORY REAR ACCESSORY STRUCTURE

COMMENTS/CONCERNS: BLOCK SUPPORTS WIDTH OF HOUSE. CARRIAGE HOUSE LOCATION REPETITIVE ON ALLEY. MG: HOW MANY 2-STORY? PC: SEVERAL. MG: MAKE AN EXHIBIT THAT SHOWS WHERE THEY ARE FOR APPLICATION.

MG: RELATIVE COMPLEXITY OF FRONT FACADE DIFFERS FROM WHAT YOU'D SEE ON BLOCK. MORE SIMPLICITY. REAR FACADE ALSO BUSY →

COMMITTEE RECOMMENDATION: **APPROVE [ ] DISAPPROVE [ ]**
APPROVE WITH COMMENTS/STIPULATIONS:

Committee Chair Signature (or representative) 2/27/18 Date

CONCERN IS VIEW; REAR ELEVATION WON'T BE SEEN.

THERE'S LIMITED WINDOW TYPES IN HISTORIC STRUCTURES; SIMPLIFY THOSE.

CONVOS SHOULD FOCUS ON ELEVATIONS & DEVELOPMENT.

PC: FUCTION DICTATES WINDOW SIZES.

EG: 2ND STORY DOMINATES FRONT FACADE (WINDOWS)
FRONT DOOR CALLS ATTENTION TO ITSELF.
RETURNS ON ROOF = SHOULD BE EXPOSED.

MG: PORCH SHOULD RESOLVE ITSELF, FRONT DOOR SHOULD BE CENTERED.

HIPPED ROOF WOULD ADD CONTINUITY.

WHAT IS THE PREVAILING DEMENSION OF FLOOR? LOOK AT NEIGHBORS. POTENTIALLY TURN EDGE DOWN. SLAB ON GRADE MAY BE ISSUE.

EG: HEIGHT OF FIRST FLOOR LOOKS COMPRESSED.

PC: TRYING TO STAY IN VERTICAL CONSTRAINTS.

MG: WINDOW PATTERNS: LOOK AT REPETITIVENESS. HORIZONTAL CONDITIONS UNUSUAL. LOOK AT PATTERNING. ISSUE WITH FRONT WINDOW LOCATIONS.

EG: REPLICATE FENESTRATION PATTERNS. GANGED WINDOWS MAY HELP.

NO PROBLEM WITH GATE.

EXAMPLES: MASS IS SIMPLE, TEXTURES ARE INTENTIONAL. THIN IN CONDITIONS / PATTERNS.

CITY OF SAN ANTONIO
OFFICE OF HISTORIC PRESERVATION

Historic and Design Review Commission
Design Review Committee
Report & Recommendation

DATE: 3/27/18 HDRC Case# 2018-132

ADDRESS: 206 W LULLWOOD Meeting Location: OHP

APPLICANT: PAUL CASSEB

DRC Members present: GRUBE, LAZARINE, GUARINO

Staff present: STEPHANIE PHILLIPS

Others present: DENNIS LINDSEY (OWNER - VIA PHONE)

REQUEST: 2-STORY RESIDENTIAL STRUCTURE, 2-STORY ACCESSORY, HARDSCAPING/LANDSCAPING, WALL MODIFICATIONS

COMMENTS/CONCERNS:

P: Can lower pitch of ridge to lower height.
DL: Windows are awkward on front elevation. Moving PR from front elevation. Windows should be equal in height/width (ideally). Bring windows in from powder room.
DL: Columns changing from front to back make it feel disjointed. Language should carry through. →

COMMITTEE RECOMMENDATION: **APPROVE [ ] DISAPPROVE [ ]**
APPROVE WITH COMMENTS/STIPULATIONS:

Committee Chair Signature (or representative) 3/27/18 Date

Should carry a bit more.
Window configuration on the back should help inform front facade, in terms of sill height. Could make stairs longer to allow for sill extension.

AMG: View from Howard of rear structures? Setback consistency of alley and fenestration visibility.

JL: Simplify roof in the back.

MG: Second floor apartment on accession is opportunity to add fenestration.

↳ can you get there with a single pitch?

DL: Front elevation doesn't look too cluttered, but rear is complex.

Front facade needs balance - window modifications will help.

MG: Entry on porch ok - asymmetrical door placement is ok.
Left side elevation needs windows (applicant has privacy concerns)