HISTORIC AND DESIGN REVIEW COMMISSION

February 06, 2019

HDRC CASE NO:	**2018-569**
ADDRESS:	205 OSTROM
LEGAL DESCRIPTION:	NCB 6938 BLK LOT 1&2
ZONING:	R-4 CD, H
CITY COUNCIL DIST.:	1
DISTRICT:	River Road Historic District
APPLICANT:	Aidan Mulhern, Tobias Stapleton
OWNER:	SEADC LLC
TYPE OF WORK:	Demolition with new construction of two, two story residential structures, and two, one story accessory structures
APPLICATION RECEIVED:	November 13, 2018
60-DAY REVIEW:	January 12, 2019; 30 day decision period – February 13, 2019.

REQUEST:

The applicant is requesting a Certificate of Appropriateness for approval to:

1. Demolish the historic structure located at 205 Ostrom.
2. Construct a two story, primary residential structure on the east end of the lot (lot 1).
3. Construct a two story, primary residential structure on the west end of the lot (lot 2).
4. Construct two, two story, rear accessory structures at the rear of each two story structure.
5. Install one new curb cut and driveway on Ostrom Drive in addition to the existing curb cut and driveway.

APPLICABLE CITATIONS:

UDC Section 35-614. – Demolition

Demolition of a historic landmark constitutes an irreplaceable loss to the quality and character of the City of San Antonio. Accordingly, these procedures provide criteria to prevent unnecessary damage to the quality and character of the city's historic districts and character while, at the same time, balancing these interests against the property rights of landowners.

(a)Applicability. The provisions of this section apply to any application for demolition of a historic landmark (including those previously designated as historic exceptional or historic significant) or a historic district.

(3)Property Located in Historic District and Contributing to District Although Not Designated a Landmark. No certificate shall be issued for property located in a historic district and contributing to the district although not designated a landmark unless the applicant demonstrates clear and convincing evidence supporting an unreasonable economic hardship on the applicant if the application for a certificate is disapproved. When an applicant fails to prove unreasonable economic hardship in such cases, the applicant may provide additional information regarding loss of significance as provided is subsection (c)(3) in order to receive a certificate for demolition of the property.

(b)Unreasonable Economic Hardship.

(1)Generally. The historic and design review commission shall be guided in its decision by balancing the historic, architectural, cultural and/or archaeological value of the particular landmark or eligible landmark against the special merit of the proposed replacement project. The historic and design review commission shall not consider or be persuaded to find unreasonable economic hardship based on the presentation of circumstances or items that are not unique to the property in question (i.e. the current economic climate).

(2)Burden of Proof. The historic and design review commission shall not consider or be persuaded to find unreasonable economic hardship based on the presentation of circumstances or items that are not unique to the property in question (i.e. the current economic climate). When a claim of unreasonable economic hardship is made, the owner must prove by a preponderance of the evidence that:

A. The owner cannot make reasonable beneficial use of or realize a reasonable rate of return on a structure or site, regardless of whether that return represents the most profitable return possible, unless the highly significant endangered, historic and cultural landmark, historic and cultural landmarks district or demolition delay designation, as applicable, is removed or the proposed demolition or relocation is allowed;

B. The structure and property cannot be reasonably adapted for any other feasible use, whether by the current owner or by a purchaser, which would result in a reasonable rate of return; and

C. The owner has failed to find a purchaser or tenant for the property during the previous two (2) years, despite having made substantial ongoing efforts during that period to do so. The evidence of unreasonable economic hardship introduced by the owner may, where applicable, include proof that the owner's affirmative obligations to maintain the structure or property make it impossible for the owner to realize a reasonable rate of return on the structure or property.

(3)Criteria. The public benefits obtained from retaining the cultural resource must be analyzed and duly considered by the historic and design review commission.

As evidence that an unreasonable economic hardship exists, the owner may submit the following information to the historic and design review commission by affidavit:

A. For all structures and property:

i. The past and current use of the structures and property;

ii. The name and legal status (e.g., partnership, corporation) of the owners;

iii. The original purchase price of the structures and property;

iv. The assessed value of the structures and property according to the two (2) most recent tax assessments;

v. The amount of real estate taxes on the structures and property for the previous two (2) years;

vi. The date of purchase or other acquisition of the structures and property;

vii. Principal balance and interest rate on current mortgage and the annual debt service on the structures and property, if any, for the previous two (2) years;

viii. All appraisals obtained by the owner or applicant within the previous two (2) years in connection with the owner's purchase, financing or ownership of the structures and property;

ix. Any listing of the structures and property for sale or rent, price asked and offers received;

x. Any consideration given by the owner to profitable adaptive uses for the structures and property;

xi. Any replacement construction plans for proposed improvements on the site;

xii. Financial proof of the owner's ability to complete any replacement project on the site, which may include but not be limited to a performance bond, a letter of credit, a trust for completion of improvements, or a letter of commitment from a financial institution; and

xiii. The current fair market value of the structure and property as determined by a qualified appraiser.

xiv. Any property tax exemptions claimed in the past five (5) years.

B. For income producing structures and property:

i. Annual gross income from the structure and property for the previous two (2) years;

ii. Itemized operating and maintenance expenses for the previous two (2) years; and

iii. Annual cash flow, if any, for the previous two (2) years.

C. In the event that the historic and design review commission determines that any additional information described above is necessary in order to evaluate whether an unreasonable economic hardship exists, the historic and design review commission shall notify the owner. Failure by the owner to submit such information to the historic and design review commission within fifteen (15) days after receipt of such notice, which time may be extended by the historic and design review commission, may be grounds for denial of the owner's claim of unreasonable economic hardship.

When a low-income resident homeowner is unable to meet the requirements set forth in this section, then the historic and design review commission, at its own discretion, may waive some or all of the requested information and/or request substitute information that an indigent resident homeowner may obtain without incurring any costs. If the historic and design review commission cannot make a determination based on information submitted and an appraisal has not been provided, then the historic and design review commission may request that an appraisal be made by the city.

(d)Documentation and Strategy.

(1)Applicants that have received a recommendation for a certificate shall document buildings, objects, sites or structures which are intended to be demolished with 35mm slides or prints, preferably in black and white, and supply a set of slides or prints to the historic preservation officer.

(2)Applicants shall also prepare for the historic preservation officer a salvage strategy for reuse of building materials deemed valuable by the historic preservation officer for other preservation and restoration activities.

(3)Applicants that have received an approval of a certificate regarding demolition shall be permitted to receive a demolition permit without additional commission action on demolition, following the commission's recommendation of a certificate for new construction. Permits for demolition and construction shall be issued simultaneously if requirements of section 35-609, new construction, are met, and the property owner provides financial proof of his ability to complete the project.

(4)When the commission recommends approval of a certificate for buildings, objects, sites, structures designated as

landmarks, or structures in historic districts, permits shall not be issued until all plans for the site have received approval from all appropriate city boards, commissions, departments and agencies. Permits for parking lots shall not be issued, nor shall an applicant be allowed to operate a parking lot on such property, unless such parking lot plan was approved as a replacement element for the demolished object or structure.

(e)Issuance of Permit. When the commission recommends approval of a certificate regarding demolition of buildings, objects, sites, or structures in historic districts or historic landmarks, permits shall not be issued until all plans for the site have received approval from all appropriate city boards, commissions, departments and agencies. Once the replacement plans are approved a fee shall be assessed for the demolition based on the approved replacement plan square footage. The fee must be paid in full prior to issuance of any permits and shall be deposited into an account as directed by the historic preservation officer for the benefit, rehabilitation or acquisition of local historic resources. Fees shall be as follows and are in addition to any fees charged by planning and development services:

0—2,500 square feet = $2,000.00
2,501—10,000 square feet = $5,000.00
10,001—25,000 square feet = $10,000.00
25,001—50,000 square feet = $20,000.00
Over 50,000 square feet = $30,000.00

Historic Design Guidelines, Chapter 4, Guidelines for New Construction

1. Building and Entrance Orientation

A. FAÇADE ORIENTATION

i. Setbacks—Align front facades of new buildings with front facades of adjacent buildings where a consistent setback has been established along the street frontage. Use the median setback of buildings along the street frontage where a variety of setbacks exist. Refer to UDC Article 3, Division 2. Base Zoning Districts for applicable setback requirements.

ii. Orientation—Orient the front façade of new buildings to be consistent with the predominant orientation of historic buildings along the street frontage.

B. ENTRANCES

i. Orientation—Orient primary building entrances, porches, and landings to be consistent with those historically found along the street frontage. Typically, historic building entrances are oriented towards the primary street.

2. Building Massing and Form

A. SCALE AND MASS

i. Similar height and scale—Design new construction so that its height and overall scale are consistent with nearby historic buildings. In residential districts, the height and scale of new construction should not exceed that of the majority of historic buildings by more than one-story. In commercial districts, building height shall conform to the established pattern. If there is no more than a 50% variation in the scale of buildings on the adjacent block faces, then the height of the new building shall not exceed the tallest building on the adjacent block face by more than 10%.

ii. Transitions—Utilize step-downs in building height , wall-plane offsets, and other variations in building massing to provide a visual transition when the height of new construction exceeds that of adjacent historic buildings by more than one-half story.

iii. Foundation and floor heights—Align foundation and floor-to-floor heights (including porches and balconies) within one foot of floor-to-floor heights on adjacent historic structures.

B. ROOF FORM

i. Similar roof forms—Incorporate roof forms—pitch, overhangs, and orientation—that are consistent with those predominantly found on the block. Roof forms on residential building types are typically sloped, while roof forms on nonresidential
building types are more typically flat and screened by an ornamental parapet wall.

ii. Façade configuration—The primary façade of new commercial buildings should be in keeping with established patterns. Maintaining horizontal elements within adjacent cap, middle, and base precedents will establish a consistent street wall through the alignment of horizontal parts. Avoid blank walls, particularly on elevations visible from the street. No new façade should exceed 40 linear feet without being penetrated by windows, entryways, or other defined bays.

D. LOT COVERAGE

i. Building to lot ratio—New construction should be consistent with adjacent historic buildings in terms of the building to lot ratio. Limit the building footprint for new construction to no more than 50 percent of the total lot area, unless adjacent historic buildings establish a precedent with a greater building to lot ratio.

3. Materials and Textures

A. NEW MATERIALS
i. Complementary materials—Use materials that complement the type, color, and texture of materials traditionally found in the district. Materials should not be so dissimilar as to distract from the historic interpretation of the district. For example, corrugated metal siding would not be appropriate for a new structure in a district comprised of homes with wood siding.
ii. Alternative use of traditional materials—Consider using traditional materials, such as wood siding, in a new way to provide visual interest in new construction while still ensuring compatibility.
iii. Roof materials—Select roof materials that are similar in terms of form, color, and texture to traditionally used in the district.
iv. Metal roofs—Construct new metal roofs in a similar fashion as historic metal roofs. Refer to the Guidelines for Alterations and Maintenance section for additional specifications regarding metal roofs.
v. Imitation or synthetic materials—Do not use vinyl siding, plastic, or corrugated metal sheeting. Contemporary materials not traditionally used in the district, such as brick or simulated stone veneer and Hardie Board or other fiberboard siding, may be appropriate for new construction in some locations as long as new materials are visually similar to the traditional material in dimension, finish, and texture. EIFS is not recommended as a substitute for actual stucco.

4. Architectural Details

A. GENERAL
i. Historic context—Design new buildings to reflect their time while respecting the historic context. While new construction should not attempt to mirror or replicate historic features, new structures should not be so dissimilar as to distract from or diminish the historic interpretation of the district.
ii. Architectural details—Incorporate architectural details that are in keeping with the predominant architectural style along the block face or within the district when one exists. Details should be simple in design and should complement, but not visually compete with, the character of the adjacent historic structures or other historic structures within the district. Architectural details that are more ornate or elaborate than those found within the district are inappropriate.
iii. Contemporary interpretations—Consider integrating contemporary interpretations of traditional designs and details for new construction. Use of contemporary window moldings and door surroundings, for example, can provide visual interest while helping to convey the fact that the structure is new. Modern materials should be implemented in a way that does not distract from the historic structure.

5. Garages and Outbuildings

A. DESIGN AND CHARACTER
v. Garage doors—Incorporate garage doors with similar proportions and materials as those traditionally found in the district.

6. Mechanical Equipment and Roof Appurtenances

A. LOCATION AND SITING
i. Visibility—Do not locate utility boxes, air conditioners, rooftop mechanical equipment, skylights, satellite dishes, and other roof appurtenances on primary facades, front-facing roof slopes, in front yards, or in other locations that are clearly visible from the public right-of-way.
ii. Service Areas—Locate service areas towards the rear of the site to minimize visibility from the public right-of-way.
B. SCREENING
i. Building-mounted equipment—Paint devices mounted on secondary facades and other exposed hardware, frames, and piping to match the color scheme of the primary structure or screen them with landscaping.
ii. Freestanding equipment—Screen service areas, air conditioning units, and other mechanical equipment from public view using a fence, hedge, or other enclosure.
iii. Roof-mounted equipment—Screen and set back devices mounted on the roof to avoid view from public right-of-way.

FINDINGS:

General findings:

a. The applicant is requesting a Certificate of Appropriateness for approval to demolish the historic structure located at 205 Ostrom and to construct two, two story, single family residential structures; two, rear accessory structures and to create a new curb cut and driveway on the site.
b. CASE HISTORY – A request to demolish the historic structure and construct two, two story single-family residential structures and two rear accessory structures was heard and denied by the Historic and Design Review Commission on November 1, 2017. A subsequent appeal of the Historic and Design Review Commission's decision was denied by the Board of Adjustment.
c. DESIGN REVIEW COMMITTEE – This request was reviewed by the Design Review Committee on January 9, 2019. At that meeting, committee members noted that the structure had lost structural integrity and commented on the proposed new construction.
d. The River Road Historic District has been intensely opposed to the demolition of structures located within the district. The criteria outlined for the demolition of a contributing structure noted in UDC Section 35-618 is important to the public process.
e. ARCHAEOLOGY- The project area is within the River Improvement Overlay District and the River Road Local Historic District. A review of historic archival maps shows the Upper Labor Acequia crossing the property. Therefore, Archaeological investigations may be required.

Findings related to request item #1:

1a. The structure located at 205 Ostrom was constructed circa 1935 and is located within the River Road Historic District. The structure features architectural elements that are indicative of the Minimal Traditional Style that can be found in the district. The house features many of its original materials including wood siding and wood windows. However, modifications to the form of the historic structure have resulted in the removal and enclosing of the front porch, which now presents itself as a screened porch. Despite these modifications, staff finds the house to be a contributing resource within the River Road Historic District due to its construction date and architectural style.

1b. The loss of a contributing structure is an irreplaceable loss to the quality and character of San Antonio. Demolition of any contributing buildings should only occur after every attempt has been made, within reason, to successfully reuse the structure. Clear and convincing evidence supporting an unreasonable economic hardship on the applicant if the application for a certificate is disapproved must be presented by the applicant in order for demolition to be considered. The criteria for establishing unreasonable economic hardship are listed in UDC Section 35-614 (b)(3). The applicant must prove by a preponderance of the evidence that:

A. The owner cannot make reasonable beneficial use of or realize a reasonable rate of return on a structure or site, regardless of whether that return represents the most profitable return possible, unless the highly significant endangered, historic and cultural landmark, historic and cultural landmarks district or demolition delay designation, as applicable, is removed or the proposed demolition or relocation is allowed;

[The applicant has not provided updated financial information regarding this request. At the time of HDRC denial of the previous request, the applicant provided a detailed cost estimate for rehabilitation of the structure which was approximately $589,242. This bid was provided by a contractor who was approved by the applicant's financing provider. The applicant has noted that the rehabilitation or new construction at this site is limited to a contractor that is recommended and approved by their financial provider. The applicant has noted that financing for the proposed rehabilitation and new construction has been limited due to the current condition of the structure. Staff finds that an alternative opinion by a third-party contractor may result in a lower estimate for repairs. The applicant has not submitted additional bids at this time.]

B. The structure and property cannot be reasonably adapted for any other feasible use, whether by the current owner or by a purchaser, which would result in a reasonable rate of return;

[The applicant has provided structural reports and analyses from three licensed engineers. These reports note that numerous damage has occurred due to dry rot, wet rot, termites and other elements have significantly reduced the structural integrity of the structure's wood members. Structural elements that have been noted by the licensed engineers to be deteriorated to an extent that cannot be repaired include roof trusses, floor joists, ridge beams, the roof structure and other structural wood elements. The engineer reports also note the collapse of the floor structure, loss of wood framing elements, severe water damage, a damaged concrete foundation, displaced floor beams and other deteriorated elements.]

C. The owner has failed to find a purchaser or tenant for the property during the previous two (2) years, despite having made substantial ongoing efforts during that period to do so. The evidence of unreasonable economic hardship introduced by the owner may, where applicable, include proof that the owner's affirmative obligations to maintain the structure or property make it impossible for the owner to realize a reasonable rate of return on the structure or property.

[Per Bexar County Appraisal District records, the last deed transaction for this property occurred on May 25, 2018, when the property was sold to a new owner, separate from the owner whose request for demolition with new construction was denied as described in finding b.]

1c. Staff finds that the applicant has not demonstrated an unreasonable economic hardship in accordance with the UDC due to the lack of updated financial hardship documents as well as the sale of the property within the last calendar year with no active marketing of the property. When an applicant fails to prove unreasonable economic hardship, the applicant may provide to the Historic and Design Review Commission additional information which may show a loss of significance in regards to the subject of the application in order to receive Historic and Design Review Commission recommendation of approval of the demolition. If, based on the evidence presented, the Historic and Design Review Commission finds that the structure or property is no longer historically, culturally, architecturally or archeologically significant, it may make a recommendation for approval of the demolition. In making this determination, the historic and design review commission must find that the owner has provided sufficient evidence to support a finding by the commission that the structure or property has undergone significant and irreversible changes which have caused it to lose the historic, cultural, architectural or archeological significance, qualities or features which qualified the structure or property for such designation. Additionally, the Historic and Design Review Commission must find that such changes were not caused either directly or indirectly by the owner, and were not due to intentional or negligent destruction or a lack of maintenance rising to the level of a demolition by neglect.

1d. In general, staff encourages the rehabilitation, and when necessary, reconstruction of historic structures. Such work is eligible for local tax incentives. The financial benefit of the incentives should be taken into account when weighing the costs of rehabilitation against the costs of demolition with new construction.

<u>Findings related to request item #2:</u>

2a. SETBACKS & ORIENTATION – According to the Guidelines for New Construction, the front facades of new buildings are to align with front facades of adjacent buildings where a consistent setback has been established along the street frontage. Additionally, the orientation of new construction should be consistent with the historic example found on the block. The applicant has oriented the structure on lot 2 to feature an orientation that matches that of the historic structure currently on the site. The applicant has not provided exact numbers in regards to setbacks. This should be provided to staff. Any final plans must represent accurate setback conditions and demonstrate compliance with the Unified Development Code prior to any request for a Certificate of Appropriateness.

2b. TREE SURVEY – The applicant has provided staff with a site plan that includes information regarding existing and proposed trees. The applicant has noted that existing heritage trees on the property are in decay, but will be preserved.

2c. ENTRANCES – According to the Guidelines for New Construction 1.B.i., primary building entrances should be

oriented towards the primary street. The applicant has proposed to orient the primary entrance towards the intersection of Ostom and Magnolia Avenue. Staff finds this appropriate and consistent with the Guidelines.

2d. SCALE & MASS – Per the Guidelines for New Construction 2.A.i., a height and massing similar to historic structures in the vicinity of the proposed new construction should be used. The applicant has proposed a two story structure with an overall height of 31' – 5". Many structures in the immediate vicinity feature either one or one and a half stories of height. While the applicant has proposed two stories, many of the neighboring structures feature additional height and steep pitched roofs. Staff finds the proposed height to be appropriate and consistent with the Guidelines.

2e. FOOTPRINT – The applicant has proposed a footprint that in relationship to the proposed structure to the west (lot 1) is slightly smaller in footprint to accommodate a smaller lot footprint.

2f. FOUNDATION &FLOOR HEIGHTS – According to the Guidelines for New Construction 2.A.iii., foundation and floor heights should be aligned within one (1) foot of neighboring structure's foundations. The applicant has proposed a foundation height of approximately 2' – 0". This is consistent with the Guidelines.

2g. ROOF FORM – The applicant has proposed a roof form that includes front and rear facing gables. This is consistent with the Guidelines.

2h. WINDOW & DOOR OPENINGS – Per the Guidelines for New Construction 2.C.i., window and door openings with similar proportions of wall to window space as typical with nearby historic facades should be incorporated into new construction. The applicant has featured window openings that feature historic heights and widths as well as window groupings that are found historically on Craftsman structures. Staff finds that the applicant should incorporate additional fenestration on the right and left elevations on the first floor.

2i. LOT COVERAGE – The building footprint for new construction should be no more than fifty (50) percent of the size of total lot area. The applicant's proposed building footprint is consistent with the Guidelines for New Construction 2.D.i.

2j. MATERIALS – The applicant has noted the use of Hardie siding, Hardie shingles, Hardie trim, asphalt shingles, brick foundation skirting and wood windows. The applicant has also noted the use of salvaged wood elements from the existing historic structure.

2k. WINDOW MATERIALS – The applicant should ensure that the proposed windows feature meeting rails that are no taller than 1.25" and stiles no wider than 2.25". White manufacturer's color is not allowed, and color selection must be presented to staff. There should be a minimum of two inches in depth between the front face of the window trim and the front face of the top window sash. This must be accomplished by recessing the window sufficiently within the opening or with the installation of additional window trim to add thickness. Window trim must feature traditional dimensions and an architecturally appropriate sill detail. Window track components must be painted to match the window trim or concealed by a wood window screen set within the opening.

2l. ARCHITECTURAL DETAILS – New buildings should be designed to reflect their time while representing the historic context of the district. Additionally, architectural details should be complementary in natural and should not detract from nearby historic structures. Generally, the proposed structure is consistent with the Guidelines.

<u>Findings related to request item #3:</u>

3a. SETBACKS & ORIENTATION – According to the Guidelines for New Construction, the front facades of new buildings are to align with front facades of adjacent buildings where a consistent setback has been established along the street frontage. Additionally, the orientation of new construction should be consistent with the historic example found on the block. The applicant has proposed to orient the westernmost structure on lot 2 toward Magnolia Avenue. Staff finds this orientation to be appropriate. The applicant has not provided exact numbers in regards to setbacks. This should be provided to staff. Any final plans must represent accurate setback conditions and demonstrate compliance with the Unified Development Code prior to any request for a Certificate of Appropriateness.

3b. TREE SURVEY – The applicant has provided staff with a site plan that includes information regarding existing and proposed trees. The applicant has noted that existing heritage trees on the property are in decay, but will be preserved.

3c. ENTRANCES – According to the Guidelines for New Construction 1.B.i., primary building entrances should be oriented towards the primary street. The applicant has proposed to orient the primary entrance towards Magnolia Avenue. This is consistent with the Guidelines.

3d. SCALE & MASS – Per the Guidelines for New Construction 2.A.i., a height and massing similar to historic

structures in the vicinity of the proposed new construction should be used. The applicant has proposed a two story structure with an overall height of 31' – 5". Many structures in the immediate vicinity feature either one or one and a half stories of height. While the applicant has proposed two stories, many of the neighboring structures feature additional height and steep pitched roofs. Staff finds the proposed height to be appropriate and consistent with the Guidelines.

3e. FOUNDATION &FLOOR HEIGHTS – According to the Guidelines for New Construction 2.A.iii., foundation and floor heights should be aligned within one (1) foot of neighboring structure's foundations. The applicant has proposed a foundation height of approximately 2' – 0". This is consistent with the Guidelines.

3f. ROOF FORM – The applicant has proposed a roof form that includes front and rear facing gables. This is consistent with the Guidelines.

3g. WINDOW & DOOR OPENINGS – Per the Guidelines for New Construction 2.C.i., window and door openings with similar proportions of wall to window space as typical with nearby historic facades should be incorporated into new construction. The applicant has featured window openings that feature historic heights and widths as well as window groupings that are found historically on Craftsman structures. Staff finds that the applicant should incorporate additional fenestration on the right and left elevations on the first floor.

3h. LOT COVERAGE – The building footprint for new construction should be no more than fifty (50) percent of the size of total lot area. The applicant's proposed building footprint is consistent with the Guidelines for New Construction 2.D.i.

3i. MATERIALS – The applicant has noted the use of Hardie siding, Hardie shingles, Hardie trim, asphalt shingles, brick foundation skirting and wood windows. The applicant has also noted the use of salvaged wood elements from the existing historic structure.

3j. WINDOW MATERIALS – The applicant should ensure that the proposed windows feature meeting rails that are no taller than 1.25" and stiles no wider than 2.25". White manufacturer's color is not allowed, and color selection must be presented to staff. There should be a minimum of two inches in depth between the front face of the window trim and the front face of the top window sash. This must be accomplished by recessing the window sufficiently within the opening or with the installation of additional window trim to add thickness. Window trim must feature traditional dimensions and an architecturally appropriate sill detail. Window track components must be painted to match the window trim or concealed by a wood window screen set within the opening.

3k. ARCHITECTURAL DETAILS – New buildings should be designed to reflect their time while representing the historic context of the district. Additionally, architectural details should be complementary in natural and should not detract from nearby historic structures. Generally, the proposed structure is consistent with the Guidelines.

<u>Findings related to request item #4:</u>

4a. ACCESSORY STRUCTURES – To the south of the structure proposed on lot 1 and to the west of the structure proposed on lot 2, the applicant has proposed one story accessory structures. The proposed accessory structures will feature an overall height of 17' – 5". The proposed accessory structures will feature garage doors and detailing that overall is consistent with the architectural of the proposed primary structures as well as what is found historically throughout the River Road Historic District. Staff finds this to be appropriate and consistent with the Guidelines.

4b. SETBACKS & ORIENTATION – The applicant has provided a site plan that notes the proposed accessory structures and setback lines; however, a dimension is not provided for the setbacks. Any final plans must represent accurate setback conditions and demonstrate compliance with the Unified Development Code prior to any request for a Certificate of Appropriateness.

4c. TREE SURVEY – The applicant has provided staff with a site plan that includes information regarding existing and proposed trees. The applicant has noted that existing heritage trees on the property are in decay, but will be preserved.

<u>Findings related to request item #5:</u>

5a. DRIVEWAYS – The applicant has proposed to introduce one new curb cut on the property to exist with an existing curb cut that is located on Ostrom Drive. The Guidelines for Site Elements note that historic profiles are

to be used for the creation of curb cuts and that typical driveway widths are to be used, typically no wider than ten feet in historic districts; however, there are examples in the immediate area of curb cut and driveway widths that are wider than ten feet in width. Staff finds that the proposed driveway location are appropriate.

5b. TREE SURVEY – The applicant has provided staff with a site plan that includes information regarding existing and proposed trees. The applicant has noted that existing heritage trees on the property are in decay, but will be preserved.

RECOMMENDATION:

1. Staff does not recommend approval of request item #1, the demolition of the historic structure based on findings 1a through 1d.

If the HDRC finds that a loss of significance has occurred or finds that the criteria for establishing an unreasonable economic hardship have been met and approves the requested demolition, then staff makes the following recommendations regarding the requested new construction:

2 – 3. Staff recommends approval of request items #2 and #3, the construction of two, two story single family residential structures on the property based on findings 2a through 3k with the following stipulations. This is only applicable if item #1, demolition is approved.

i. That any horizontal Hardie siding feature an exposure of four (4) inches and a smooth finish. Any shingle siding should be wood and not composite to provide a more accurate profile.

ii. That the proposed wood windows feature meeting rails that are no taller than 1.25” and stiles no wider than 2.25”. White manufacturer’s color is not allowed, and color selection must be presented to staff. There should be a minimum of two inches in depth between the front face of the window trim and the front face of the top window sash. This must be accomplished by recessing the window sufficiently within the opening or with the installation of additional window trim to add thickness. Window trim must feature traditional dimensions and an architecturally appropriate sill detail. Window track components must be painted to match the window trim or concealed by a wood window screen set within the opening.

iii. ARCHAEOLOGY- Archaeological investigations may be required. The archaeological scope of work should be submitted to the Office of Historic Preservation archaeologists for review and approval prior to beginning the archaeological investigation. The development project shall comply with all federal, state, and local laws, rules, and regulations regarding archaeology.

iv. That the site plan submitted by the applicant feature dimensioned setbacks.

4. Staff recommends approval of request item #4, the construction of two, accessory structures based on finding 4a and 4c with the following stipulations:

i. That any horizontal Hardie siding feature an exposure of four (4) inches and a smooth finish. Any shingle siding should be wood and not composite to provide a more accurate profile.

ii. That a detail and materials information be submitted for the proposed garage door. A vinyl or composite garage door should not be installed.

iii. ARCHAEOLOGY- Archaeological investigations may be required. The archaeological scope of work should be submitted to the Office of Historic Preservation archaeologists for review and approval prior to beginning the archaeological investigation. The development project shall comply with all federal, state, and local laws, rules, and regulations regarding archaeology.

iv. That the site plan submitted by the applicant feature dimensioned setbacks.

5. Staff recommends approval of request item #4, the installation of a new curb cut and driveway with the stipulation that the driveway not exceed ten (10) feet in width.

CASE MANAGER:

Edward Hall

SEADC

[SEADC]
[205 Ostrom Drive, San Antonio, TX 78212]
[202-792-8733]

RE: Narrative for 205 Ostrom Drive HDRC Application

Dear , Mr. Hall

Please find attached in this application documents as requested: Printed copy of all materials, USB Chip containing same, Completed application , Photo's, Narrative explaining works, Site Plan, Elevations and floor plan , Specs, Doc's on finishes

We have utilized the former owner's previous application data and supporting documentation to strengthen this application for demolition.

I would like to remind you and the commission that this is our first time in front of the Board for Demolition since we have taken possession of the land and the 23 year abandoned Building.

Explaining Works: Demolition of 205 Ostrom Drive. Construction on Lot 1 of a two story building with an accessory structure. Construction on Lot 2 of a two story building with an accessory structure. Addition of a driveway on Lot 2, renovation of existing driveway at Lot 1. Landscaping of lot's and recycling of any usable materials where ever possible.

You will find attached Three (3) structural engineers reports from Texas State Licensed professionals, condemning the building, Notes from HDRC Commissioners visits, Two Letters of support from the River Road Neighborhood Association (both Historic and Neighborhood association)

We have included a set-back drawing showing clearly the site restrictions.

Please note this parcel containing 2 lots is zoned for two hours be they semidetached or stand alone. We have included this information from Zoning.

Regards, Aidan Mulhern

Elevation of Main Structure 205 Ostrom Drive San Antonio Tx 78212

Accessory Building 205 OStrom Drive San Antonio Tx 78212

SET-BACKS

(Ord. No. 2010-11-18-0985, § 2, 11-18-10) (Ord. No. 2012-10-18-0829, § 2, 10-18-12)
(1) Accessory structures exceeding thirty (30) inches in height shall be located a minimum distance of five (5) feet from any side or rear property line. In residential districts, however, if an accessory structure has no sills, belt courses, cornices, buttresses, eaves, or similar projecting architectural features, then the minimum distance from any side or rear property line may be reduced to three (3) feet.

Zoning for new houses not existing, Setbacks as follows Front 10ft, Sides 5ft, Rear 20ft.

Lot 1: 32% Massing Including Accessory Driveway and House within Boundary Line
Lot 2: 36% Massing Including Accessory Driveway and House within Boundary Line
Island Combined : 34% Massing including driveways and structures

Property ID: 385787 Legal Description NCB 6938 BLK Lots 1 & 2
Geographical ID: 06938-000-0010 Zoning: R-4 CD
LOT 1 & 2
N.C.B. 6938

8290 SQ. FT.
0.19 ACRES

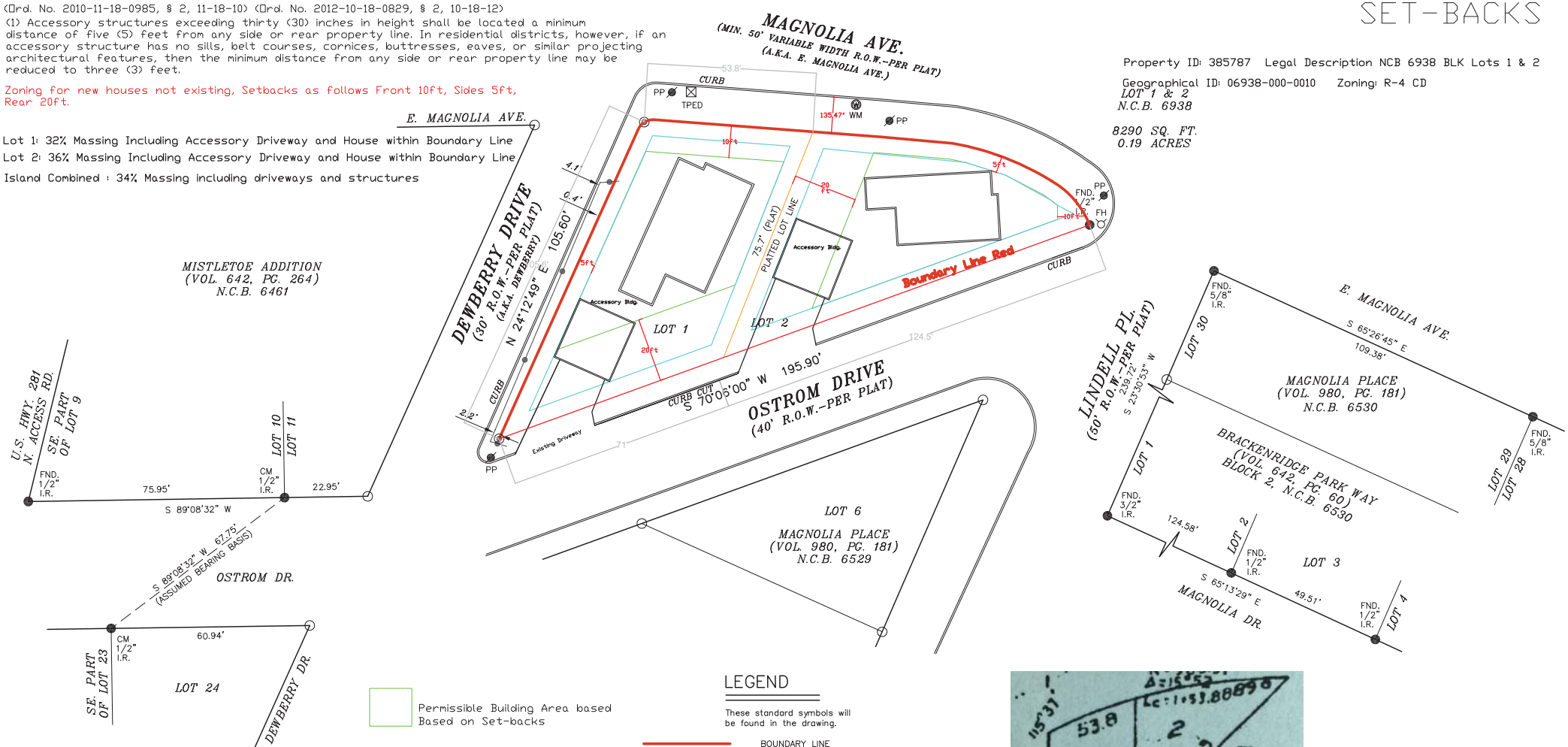

Permissible Building Area based Based on Set-backs

Permissible Accessory Area based Based on Set-backs

LEGEND

These standard symbols will be found in the drawing.

	BOUNDARY LINE
	PLATTED LOT LINE
	CHAINLINK FENCE
◎	SET IRON ROD
○	CALCULATED POINT
●	FOUND IRON ROD
☒	TELEPHONE PEDESTAL
Ⓦ	WATER METER
Ⓔ	ELECTRIC METER
Ⓖ	GAS METER
	POWER POLE
	FIRE HYDRANT
(PLAT)	RECORDED ON PLAT
(F.M.)	FIELD MEASURED
CM	CONTROL MONUMENT

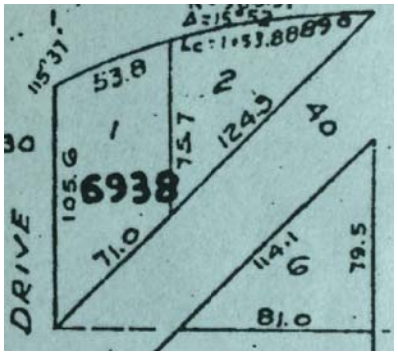

SURVEYOR'S NOTE:
THE ORIGINAL PLAT RECORD IS WITHOUT BEARINGS.
THE BEARING SHOWN HERE ARE ASSUMED. THIS REPRESENTATION IS SURVEYORS BEST INTERPRETATION OF RECORD INFORMATION.

At date of this survey, the property is in FEMA designated ZONE X as verified by FEMA map Panel No: 48029C 0405 G effective date of SEPTEMBER 29, 2010. Exact designations can only be determined by a Elevation Certificate. This information is subject to change as a result of future FEMA map revisions and/or amendments.

The survey is hereby accepted with the discrepancies, conflicts, or shortages in area or boundary lines, encroachments, protrusions, or overlapping of improvements shown.

X _____

X _____

GRAPHIC SCALE

0' 30' 60'

1 Inch = 30 Feet

SET-BACKS

(Ord. No. 2010-11-18-0985, § 2, 11-18-10) (Ord. No. 2012-10-18-0829, § 2, 10-18-12)
(1) Accessory structures exceeding thirty (30) inches in height shall be located a minimum distance of five (5) feet from any side or rear property line. In residential districts, however, if an accessory structure has no sills, belt courses, cornices, buttresses, eaves, or similar projecting architectural features, then the minimum distance from any side or rear property line may be reduced to three (3) feet.

Zoning for new houses not existing, Setbacks as follows Front 10ft, Sides 5ft, Rear 20ft.

E. MAGNOLIA AVE.

Lot 1: 41% Massing Including Accessory Driveway and House within Boundary Line

Lot 2: 35% Massing Including Accessory Driveway and House within Boundary Line

Island Combined : 28% Massing including driveways and structures

Property ID: 385787 Legal Description NCB 6938 BLK Lots 1 & 2

Geographical ID: 06938-000-0010 Zoning: R-4 CD

LOT 1 & 2
N.C.B. 6938

8290 SQ. FT.
0.19 ACRES

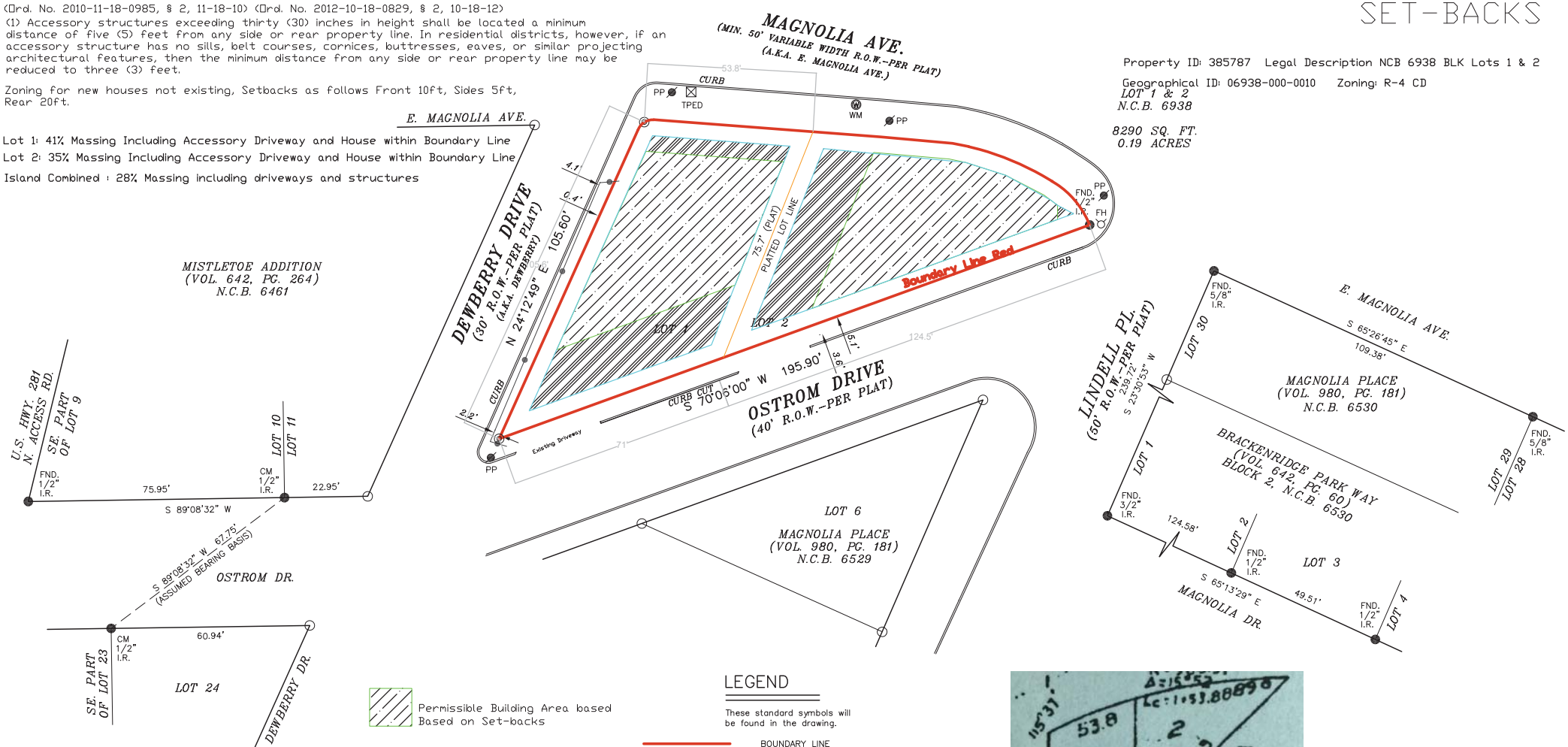

Permissible Building Area based Based on Set-backs

Permissible Accessory Area based Based on Set-backs

LEGEND

These standard symbols will be found in the drawing.

	BOUNDARY LINE
	PLATTED LOT LINE
	CHAINLINK FENCE
◎	SET IRON ROD
○	CALCULATED POINT
●	FOUND IRON ROD
⊠	TELEPHONE PEDESTAL
Ⓦ	WATER METER
Ⓔ	ELECTRIC METER
Ⓖ	GAS METER
	POWER POLE
	FIRE HYDRANT
(PLAT)	RECORDED ON PLAT
(F.M.)	FIELD MEASURED
CM	CONTROL MONUMENT

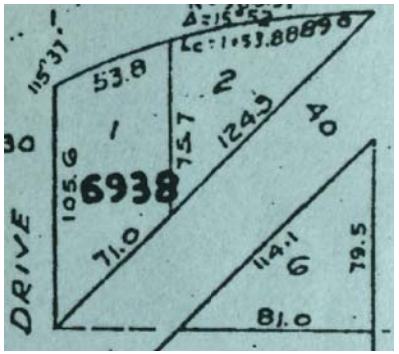

SURVEYOR'S NOTE:
THE ORIGINAL PLAT RECORD IS WITHOUT BEARINGS.
THE BEARING SHOWN HERE ARE ASSUMED. THIS REPRESENTATION IS SURVEYORS BEST INTERPRETATION OF RECORD INFORMATION.

At date of this survey, the property is in FEMA designated ZONE X as verified by FEMA map Panel No: 48029C 0405 G effective date of SEPTEMBER 29, 2010. Exact designations can only be determined by a Elevation Certificate. This information is subject to change as a result of future FEMA map revisions and/or amendments.

The survey is hereby accepted with the discrepancies, conflicts, or shortages in area or boundary lines, encroachments, protrusions, or overlapping of improvements shown.

X _____

X _____

GRAPHIC SCALE

0' 30' 60'

1 Inch = 30 Feet

(Ord. No. 2010-11-18-0985, § 2, 11-18-10) (Ord. No. 2012-10-18-0829, § 2, 10-18-12)
(1) Accessory structures exceeding thirty (30) inches in height shall be located a minimum distance of five (5) feet from any side or rear property line. In residential districts, however, if an accessory structure has no sills, belt courses, cornices, buttresses, eaves, or similar projecting architectural features, then the minimum distance from any side or rear property line may be reduced to three (3) feet.

Zoning for new houses not existing, Setbacks as follows Front 10ft, Sides 5ft, Rear 20ft.

Lot 1: 41% Massing Including Accessory Driveway and House within Boundary Line
Lot 2: 35% Massing Including Accessory Driveway and House within Boundary Line
Island Combined : 28% Massing including driveways and structures

PROPOSED

Property ID: 385787 Legal Description NCB 6938 BLK Lots 1 & 2
Geographical ID: 06938-000-0010 Zoning: R-4 CD
LOT 1 & 2
N.C.B. 6938

8290 SQ. FT.
0.19 ACRES

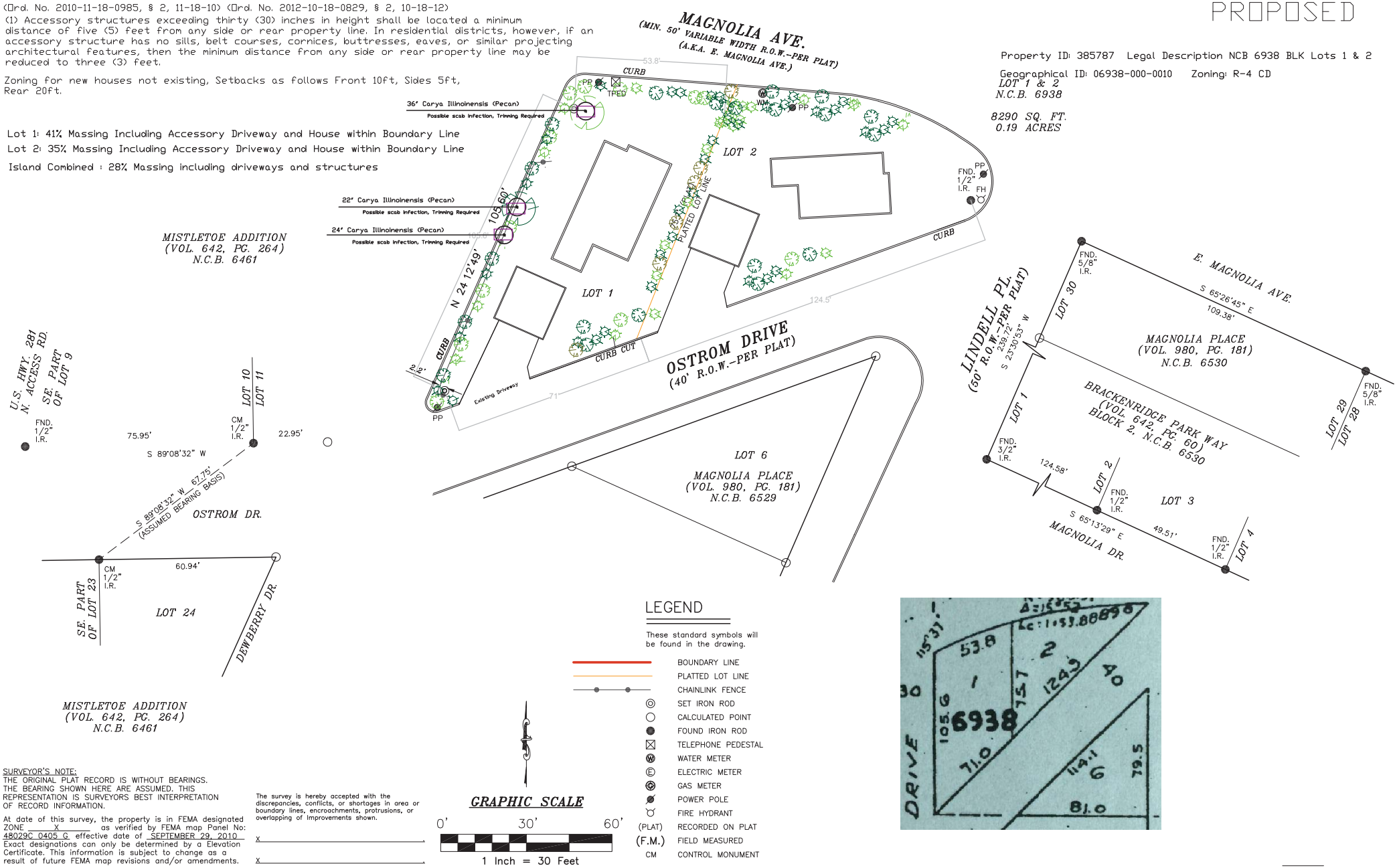

LEGEND

These standard symbols will be found in the drawing.

- BOUNDARY LINE
- PLATTED LOT LINE
- CHAINLINK FENCE
- SET IRON ROD
- CALCULATED POINT
- FOUND IRON ROD
- TELEPHONE PEDESTAL
- WATER METER
- ELECTRIC METER
- GAS METER
- POWER POLE
- FIRE HYDRANT
- (PLAT) RECORDED ON PLAT
- (F.M.) FIELD MEASURED
- CM CONTROL MONUMENT

SURVEYOR'S NOTE:
THE ORIGINAL PLAT RECORD IS WITHOUT BEARINGS. THE BEARING SHOWN HERE ARE ASSUMED. THIS REPRESENTATION IS SURVEYORS BEST INTERPRETATION OF RECORD INFORMATION.

At date of this survey, the property is in FEMA designated ZONE X as verified by FEMA map Panel No: 48029C 0405 G effective date of SEPTEMBER 29, 2010. Exact designations can only be determined by a Elevation Certificate. This information is subject to change as a result of future FEMA map revisions and/or amendments.

The survey is hereby accepted with the discrepancies, conflicts, or shortages in area or boundary lines, encroachments, protrusions, or overlapping of improvements shown.

X _____

X _____

GRAPHIC SCALE

0' 30' 60'

1 Inch = 30 Feet

SET-BACKS

(Ord. No. 2010-11-18-0985, § 2, 11-18-10) (Ord. No. 2012-10-18-0829, § 2, 10-18-12)
(1) Accessory structures exceeding thirty (30) inches in height shall be located a minimum distance of five (5) feet from any side or rear property line. In residential districts, however, if an accessory structure has no sills, belt courses, cornices, buttresses, eaves, or similar projecting architectural features, then the minimum distance from any side or rear property line may be reduced to three (3) feet.

Zoning for new houses not existing, Setbacks as follows Front 10ft, Sides 5ft, Rear 20ft.

Lot 1: 32% Massing Including Accessory Driveway and House within Boundary Line

Lot 2: 36% Massing Including Accessory Driveway and House within Boundary Line

Island Combined : 34% Massing including driveways and structures

Property ID: 385787 Legal Description NCB 6938 BLK Lots 1 & 2

Geographical ID: 06938-000-0010 Zoning: R-4 CD

LOT 1 & 2
N.C.B. 6938

8290 SQ. FT.
0.19 ACRES

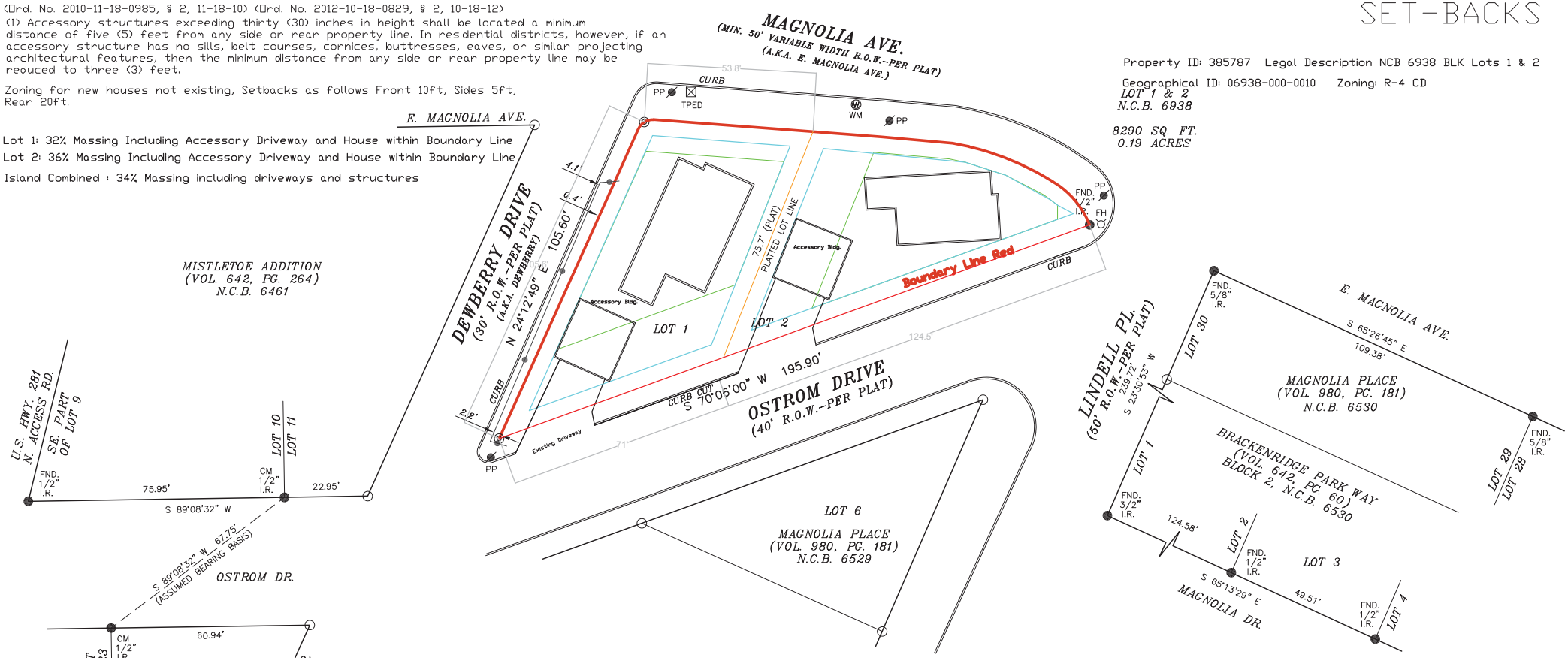

Permissible Building Area based Based on Set-backs

Permissible Accessory Area based Based on Set-backs

LEGEND

These standard symbols will be found in the drawing.

	BOUNDARY LINE
	PLATTED LOT LINE
	CHAINLINK FENCE
◎	SET IRON ROD
○	CALCULATED POINT
●	FOUND IRON ROD
⊠	TELEPHONE PEDESTAL
Ⓦ	WATER METER
Ⓔ	ELECTRIC METER
Ⓖ	GAS METER
	POWER POLE
	FIRE HYDRANT
(PLAT)	RECORDED ON PLAT
(F.M.)	FIELD MEASURED
CM	CONTROL MONUMENT

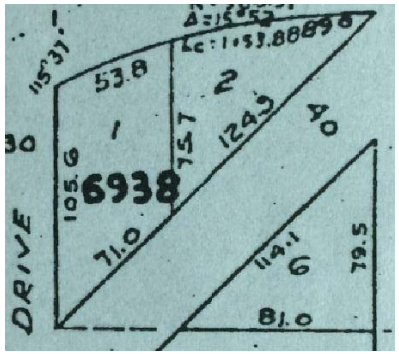

SURVEYOR'S NOTE:
THE ORIGINAL PLAT RECORD IS WITHOUT BEARINGS. THE BEARING SHOWN HERE ARE ASSUMED. THIS REPRESENTATION IS SURVEYORS BEST INTERPRETATION OF RECORD INFORMATION.

At date of this survey, the property is in FEMA designated ZONE X as verified by FEMA map Panel No: 48029C 0405 G effective date of SEPTEMBER 29, 2010. Exact designations can only be determined by a Elevation Certificate. This information is subject to change as a result of future FEMA map revisions and/or amendments.

The survey is hereby accepted with the discrepancies, conflicts, or shortages in area or boundary lines, encroachments, protrusions, or overlapping of improvements shown.

X _____

X _____

GRAPHIC SCALE

0' 30' 60'

1 Inch = 30 Feet

LOT 1 & 2
N.C.B. 6938

Property ID: 385787 Legal Description NCB 6938 BLK Lots 1 & 2

Geographical ID: 06938-000-0010 Zoning: V R-4 CD

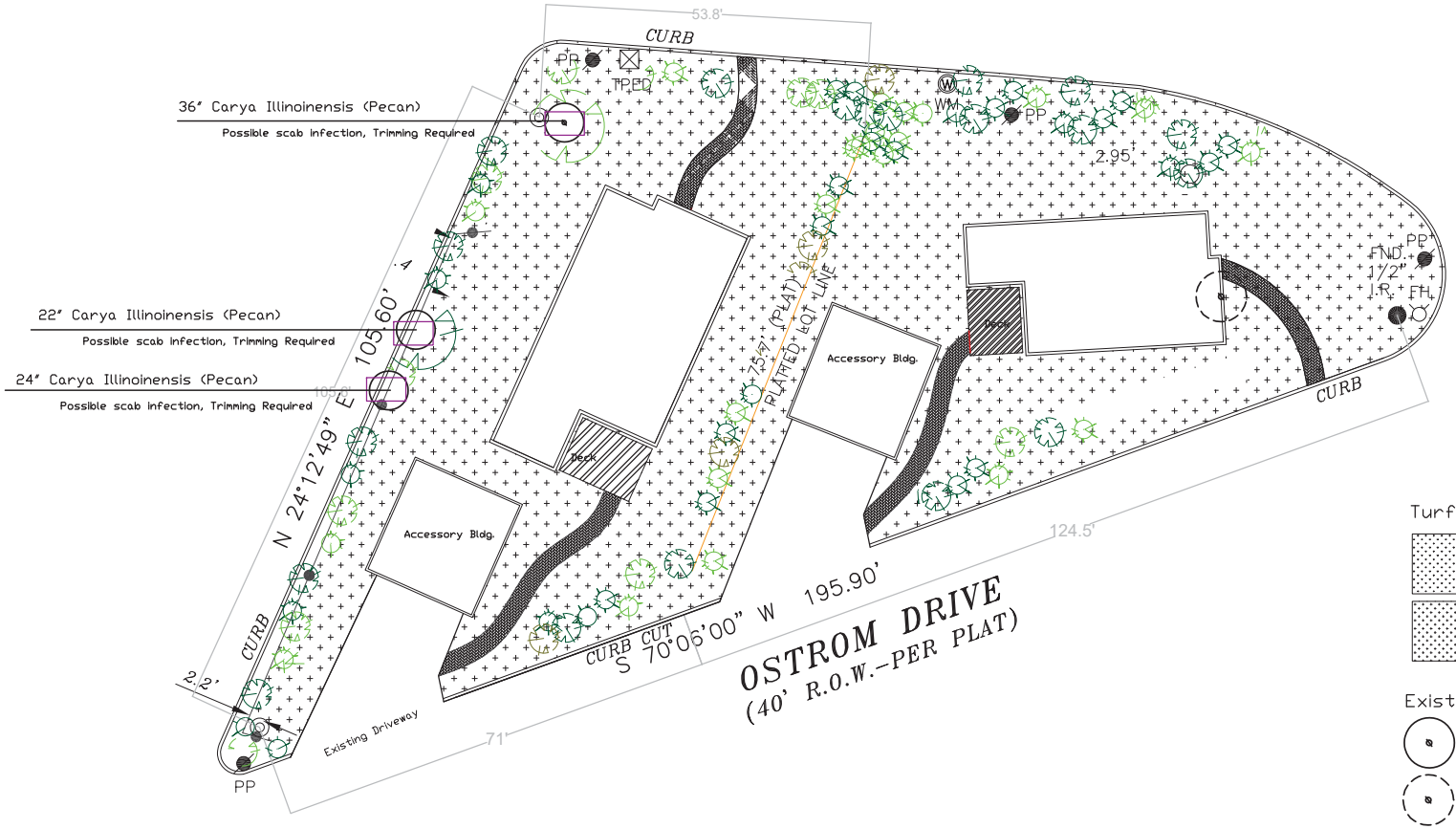

Turf Legend

Solid Sod Bermuda Grass Irrigated

St. Augustine grass With Temporary Above Ground Irrigation Until 100% Germination

Existing Tree Legend

Existing Tree To Remain

Existing Tree To Be Removed

Tree Protection Fencing To Remain During Construction

Shrubbery/ Screening

Chosen by Owner

CALL BEFORE YOU DIG 1-800-245-4545 TEXAS ONE CALL SYSTEM

Boundary Verified With Bexar County Plat Book 980 Page 181

The Island
River Road

205 Ostrom Drive
SAN ANTONIO, TEXAS 78212

Design B.D.A.
Drawn B.D.A.
Checked P.L.
Date JUNE 2018 09:34:33 AM
Design Project No. TSMN

Approvals

CUSTOMER Date
Mai & Toby
Mechanical Engineer Date
Civil/Structural Engineer
Electrical Engineer
Engineering Manager
Security Manager
CSA
PROJECT MANAGEMENT
Project Planner Date
Project Manager
Senior Project Manager
Development Manager
Project Manager
Quality Control Reviewer
Quality Control PP&E

Revisions

No. Date Description
01 June 2018 Issued for Construction

Registration

Bar Code

Sheet Title/Number

LANDSCAPE PLAN

L-10

Existing

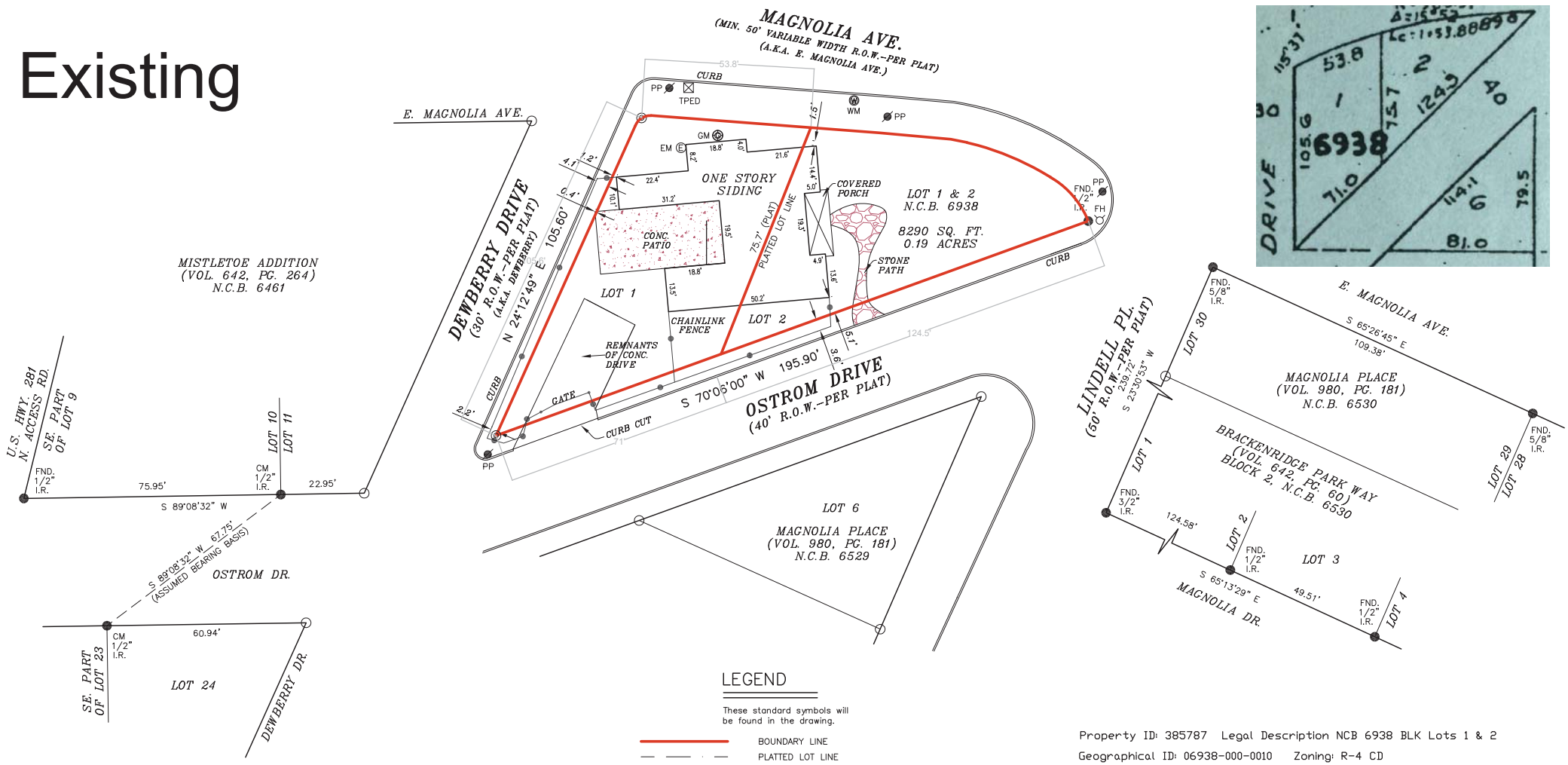

LEGEND

These standard symbols will be found in the drawing.

	BOUNDARY LINE
	PLATTED LOT LINE
	CHAINLINK FENCE
◎	SET IRON ROD
○	CALCULATED POINT
●	FOUND IRON ROD
⊠	TELEPHONE PEDESTAL
Ⓦ	WATER METER
Ⓔ	ELECTRIC METER
Ⓖ	GAS METER
⌀	POWER POLE
	FIRE HYDRANT
(PLAT)	RECORDED ON PLAT
(F.M.)	FIELD MEASURED
CM	CONTROL MONUMENT

GRAPHIC SCALE

0' 30' 60'

1 Inch = 30 Feet

Property ID: 385787 Legal Description NCB 6938 BLK Lots 1 & 2

Geographical ID: 06938-000-0010 Zoning: R-4 CD

SURVEYOR'S NOTE:
THE ORIGINAL PLAT RECORD IS WITHOUT BEARINGS.
THE BEARING SHOWN HERE ARE ASSUMED. THIS REPRESENTATION IS SURVEYORS BEST INTERPRETATION OF RECORD INFORMATION.

At date of this survey, the property is in FEMA designated ZONE X as verified by FEMA map Panel No: 48029C 0405 G effective date of SEPTEMBER 29, 2010
Exact designations can only be determined by a Elevation Certificate. This information is subject to change as a result of future FEMA map revisions and/or amendments.

The survey is hereby accepted with the discrepancies, conflicts, or shortages in area or boundary lines, encroachments, protrusions, or overlapping of improvements shown.

X _____

X _____

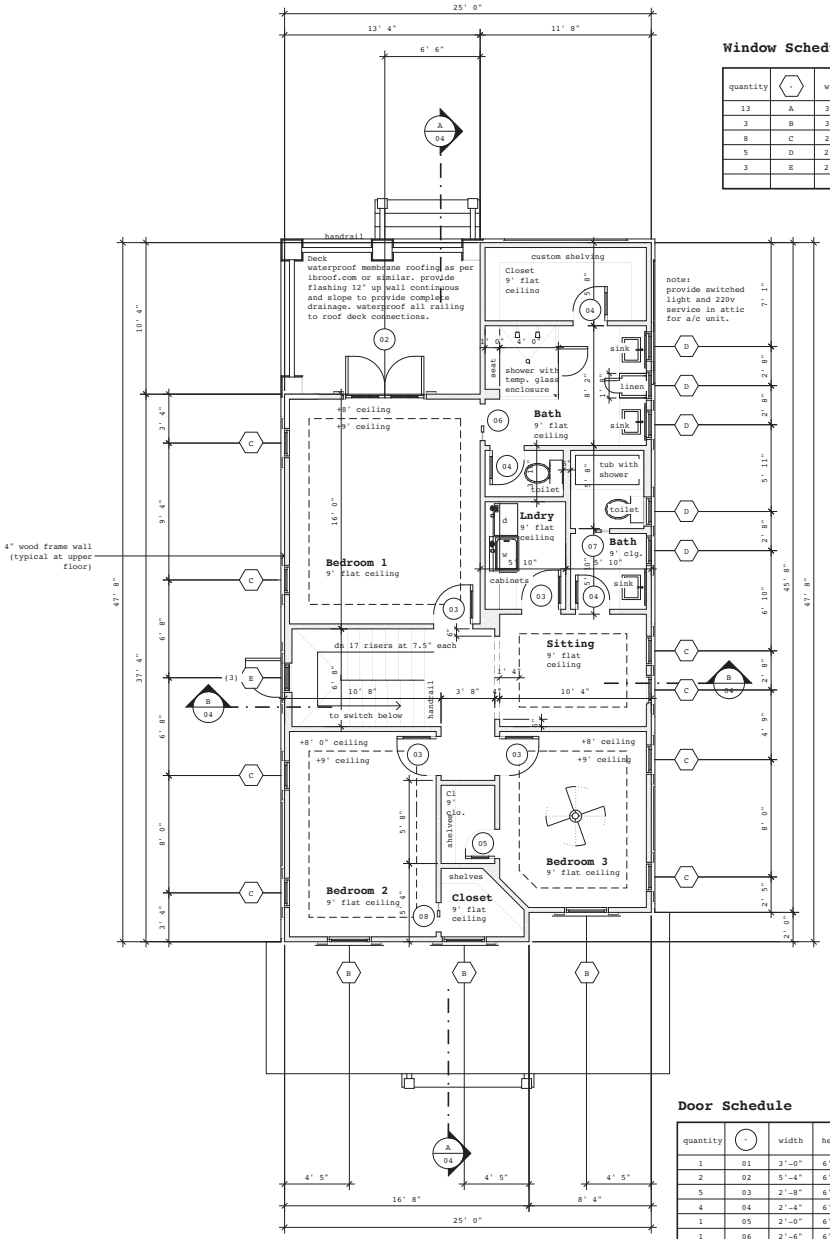

Second Floor Plan

scale: 1/4" = 1'-0"

Window Schedule

quantity	·	width	height	action	notes
13	A	3'-0"	6'-0"	double-hung	insulated
3	B	3'-0"	5'-0"	double-hung	insulated
8	C	2'-0"	5'-0"	double-hung	insulated
5	D	2'-0"	1'-4"	awning	insulated
3	E	2'-0"	2'-0"	awning	insulated

Door Schedule

quantity	·	width	height	action	notes
1	01	3'-0"	6'-8"	swing	exterior, insulated, 16"h. trans
2	02	5'-4"	6'-8"	swing	double, exterior, insulated
5	03	2'-8"	6'-8"	swing	interior, 2-panel
4	04	2'-4"	6'-8"	swing	interior, 2-panel
1	05	2'-0"	6'-8"	swing	interior, 2-panel
1	06	2'-6"	6'-8"	pocket	interior, 2-panel
1	07	2'-4"	6'-8"	pocket	interior, 2-panel
1	07	2'-4"	6'-8"	pocket	interior, 2-panel
1	08	2'-0"	6'-8"	pocket	interior, 2-panel
1	09	2'-8"	3'-10"	swing	exterior, insulated

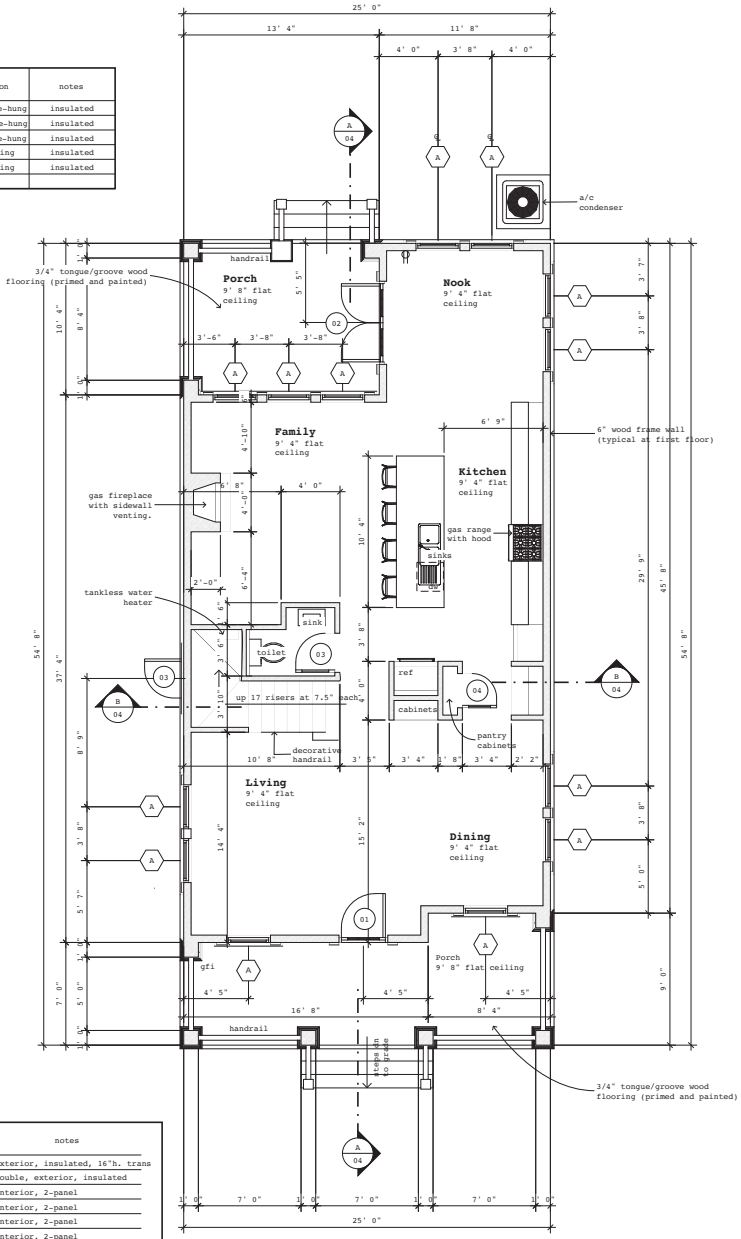

First Floor Plan

scale: 1/4" = 1'-0"

SEADC

205 Ostrom Drive San Antonio, TX 78212

202-792-8733

205 Ostrom Drive
with wood frame construction

Area Calculations
Floor1 **1042**, Floor2 **1038**
Living **2080**
Porches **329**, Garage **380**
Under Roof **2789 sf**

Release Date
August 17 , 2018

Copyright
SEADC reserves the rights to these documents and to all designs contained herein. No copies or alterations are to be made without the written permission of SEADC. All plans published are protected under the Federal Copyright Act, Title 17 of the United States Code, and Chapter 37 of the Code of Federal Regulations.

Liability Disclaimer
Placement of residence is based on owner's desired location and governing authority regulations. Every property has inherent risks due to location and acts of God which may cause damage to structures built on said property and bodily injury or death to the occupants of said structures. SEADC does not in any way guarantee the suitability of any area for construction or habitation, and will not be held liable for damages based on the location of said structure. General Contractor to verify all field conditions, code requirements, insure compliance of proposed structure with said conditions, verify all dimensions and techniques in construction documents, and notify SEADC of any discrepancies before construction.

Index

01 floor plans
02 exterior elevations
03 garage plan & elevations
04 building sections, wall section
05 foundation plan, framing plans
06 notes and details
07 electrical plans
08 optional slab foundation

01
Lot 1

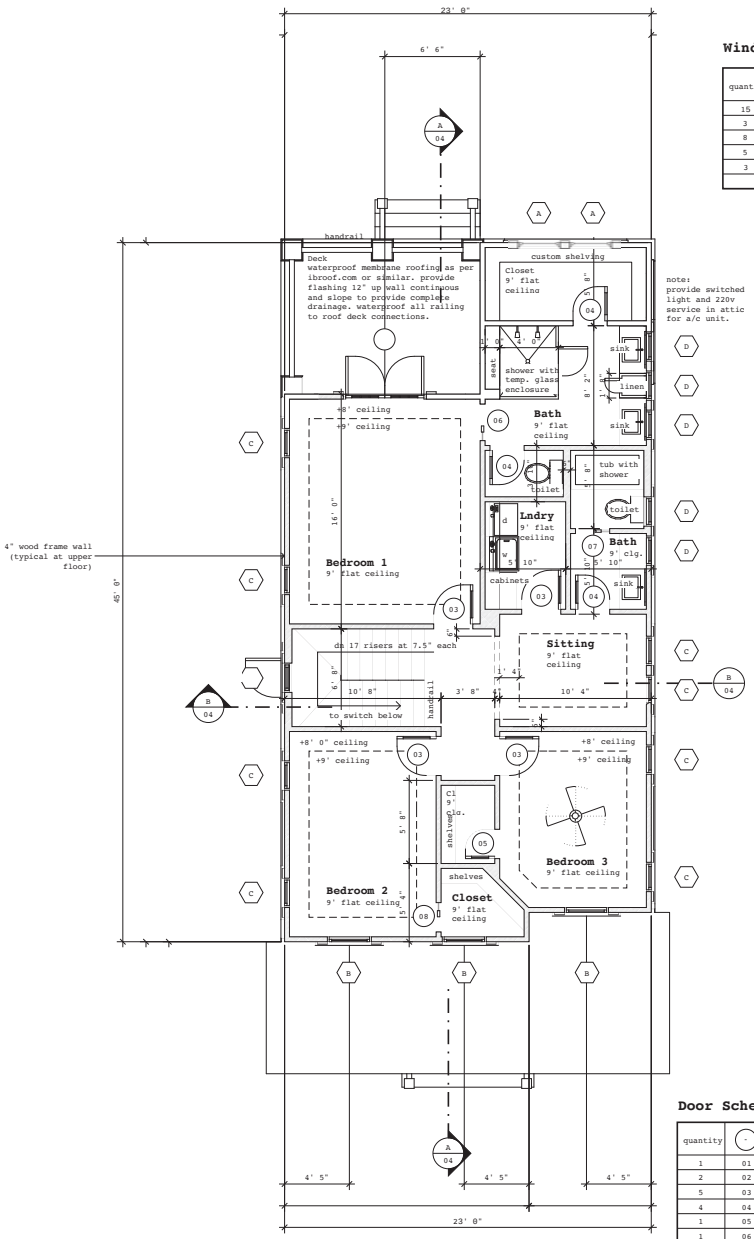

Second Floor Plan

scale: 1/4" = 1'-0"

Window Schedule

quantity	·	width	height	action	notes
15	A	3'-0"	6'-0"	double-hung	insulated
3	B	3'-0"	5'-0"	double-hung	insulated
8	C	2'-0"	5'-0"	double-hung	insulated
5	D	2'-0"	1'-4"	awning	insulated
3	E	2'-0"	2'-0"	awning	insulated

Door Schedule

quantity	·	width	height	action	notes
1	01	3'-0"	6'-8"	swing	exterior, insulated, 16"h. trans
2	02	5'-4"	6'-8"	swing	double, exterior, insulated
5	03	2'-8"	6'-8"	swing	interior, 2-panel
4	04	2'-4"	6'-8"	swing	interior, 2-panel
1	05	2'-0"	6'-8"	swing	interior, 2-panel
1	06	2'-6"	6'-8"	pocket	interior, 2-panel
1	07	2'-4"	6'-8"	pocket	interior, 2-panel
1	07	2'-4"	6'-8"	pocket	interior, 2-panel
1	08	2'-0"	6'-8"	pocket	interior, 2-panel
1	09	2'-8"	3'-10"	swing	exterior, insulated

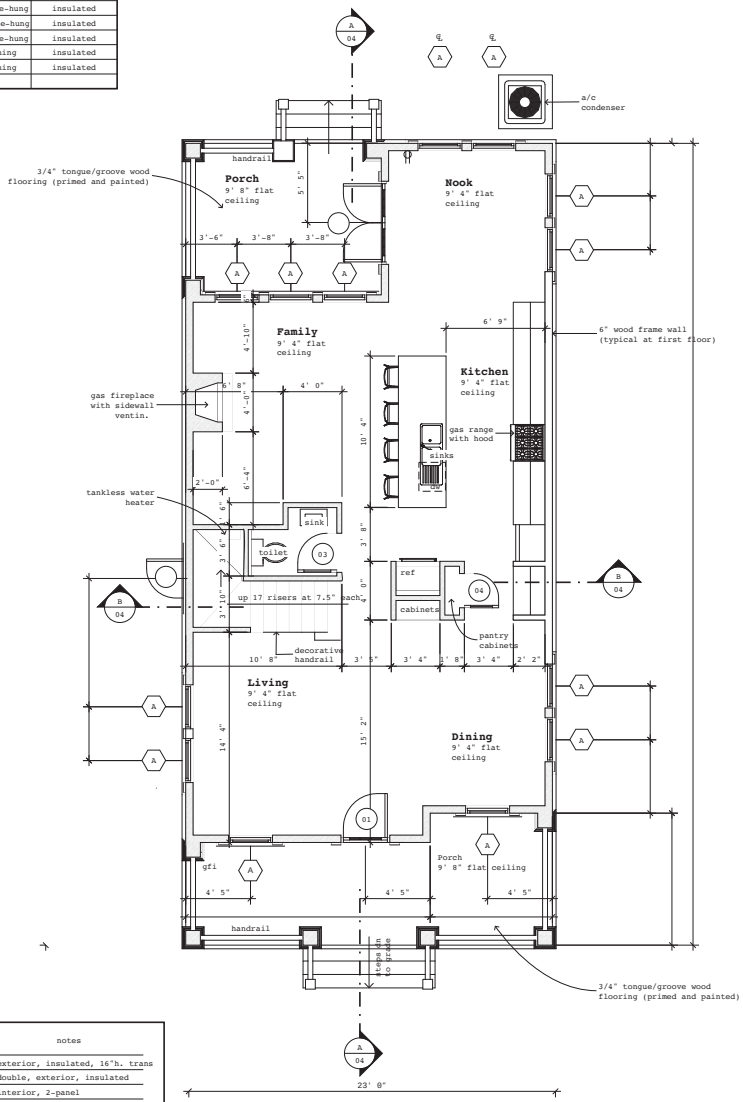

First Floor Plan

scale: 1/4" = 1'-0"

SEADC

205 Ostrom Drive San Antonio, TX 78212

202-792-8733

205 Ostrom Drive
with wood frame construction

Area Calculations
Floor1 **1042**, Floor2 **1038**
Living **2080**
Porches **329**, Garage **380**
Under Roof **2789 sf**

Release Date
August 17 , 2018

Copyright
SEADC reserves the rights to these documents and to all designs contained herein. No copies or alterations are to be made without the written permission of SEADC. All plans published are protected under the Federal Copyright Act, Title 17 of the United States Code, and Chapter 37 of the Code of Federal Regulations.

Liability Disclaimer
Placement of residence is based on owner's desired location and governing authority regulations. Every property has inherent risks due to location and acts of God which may cause damage to structures built on said property and bodily injury or death to the occupants of said structures. SEADC does not in any way guarantee the suitability of any area for construction or habitation, and will not be held liable for damages based on the location of said structure. General Contractor to verify all field conditions, code requirements, insure compliance of proposed structure with said conditions, verify all dimensions and techniques in construction documents, and notify SEADC of any discrepancies before construction.

Index

01 floor plans
02 exterior elevations
03 garage plan & elevations
04 building sections, wall section
05 foundation plan, framing plans
06 notes and details
07 electrical plans
08 optional slab foundation

01
Lot 2

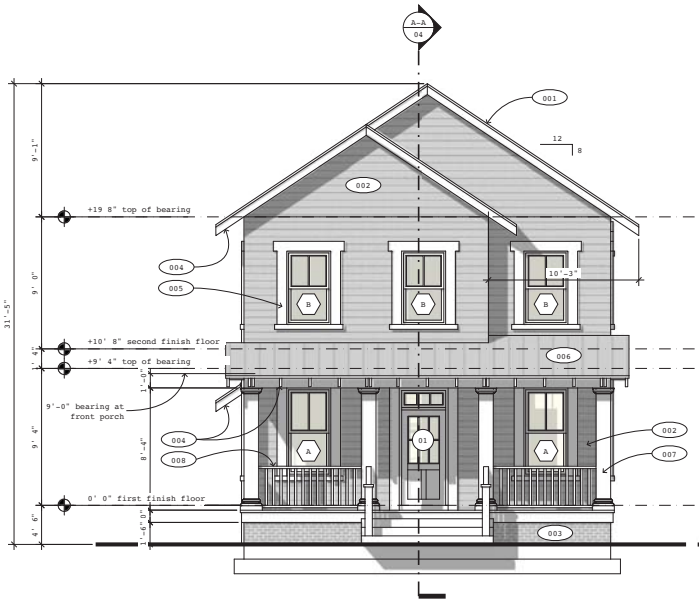

Front Exterior Elevation
scale: 1/4" = 1'-0"

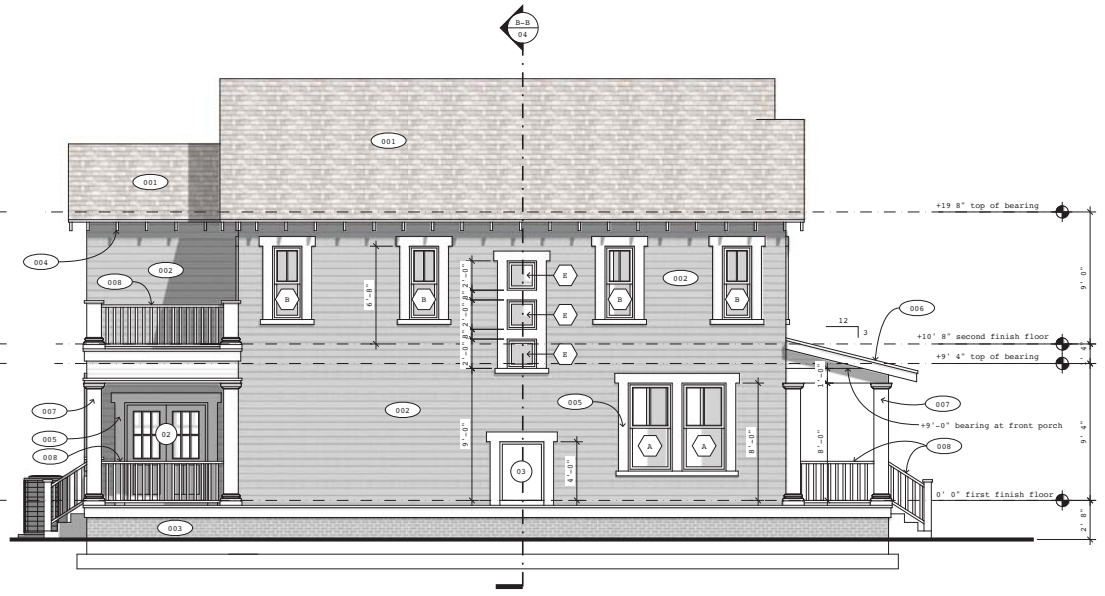

Left Side Exterior Elevation
scale: 1/4" = 1'-0"

Finish Schedule

-	description
001	40 year asphalt architectural shingles
002	horizontal lap siding (painted)
003	brick watertable
004	exposed 2x8 rafter tails (painted white)
005	8" wood door and window moulding (white)
006	standing seam metal roof (silver)
007	12" x 12" structural columns
008	handrailing

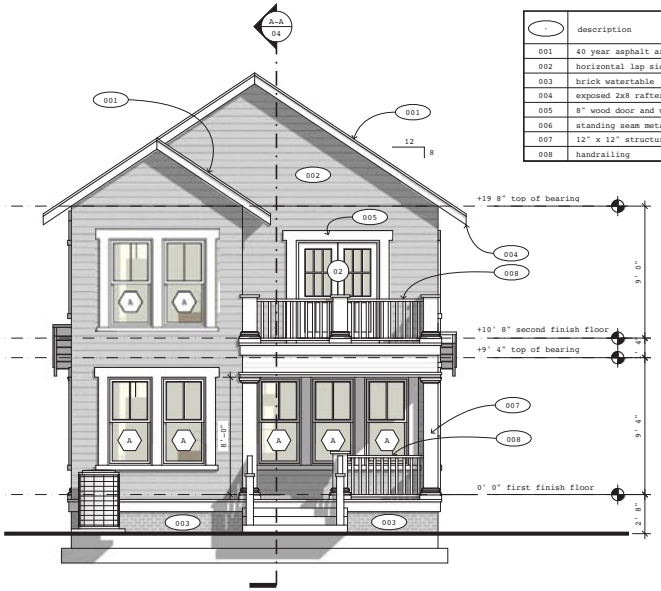

Rear Exterior Elevation
scale: 1/4" = 1'-0"

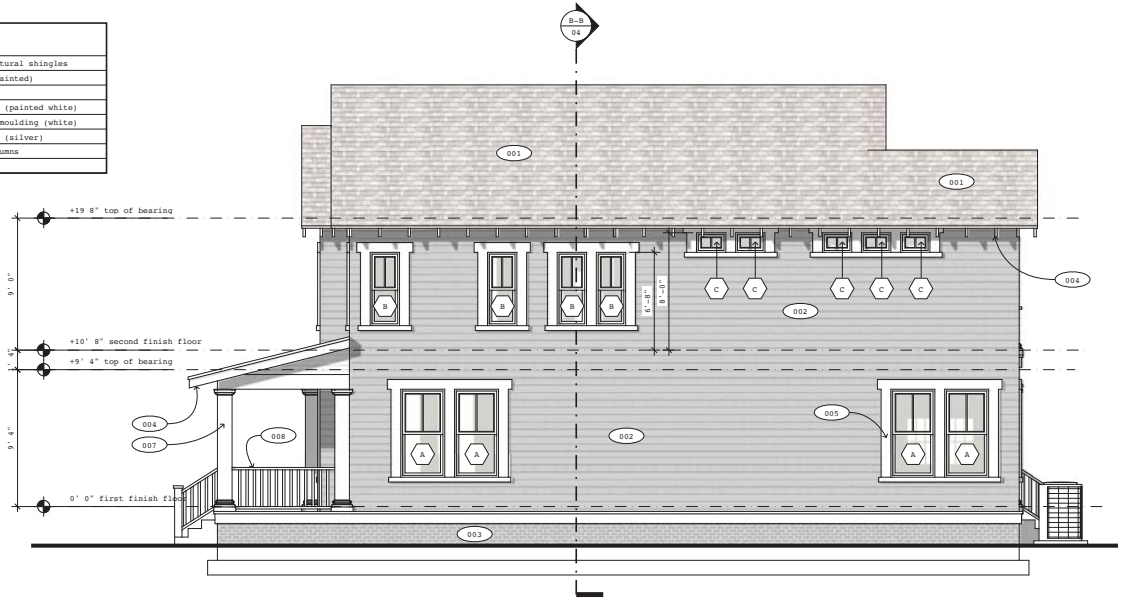

Right Side Exterior Elevation
scale: 1/4" = 1'-0"

SEADC

205 Ostrom Drive San
Antonio, TX 78212

202-792-8733

205 Ostrom Drive
with wood frame construction

Area Calculations
Floor1 **1042**, Floor2 **1038**
Living **2080**
Porches **329**, Garage **380**
Under Roof **2789 sf**

Release Date
August 17 , 2018

Copyright
SEADC reserves the rights to these documents and to all designs contained herein. No copies or alterations are to be made without the written permission of SEADC. All plans published are protected under the Federal Copyright Act, Title 17 of the United States Code, and Chapter 27 of the Code of Federal Regulations.

Liability Disclaimer
Placement of residence is based on owner's desired location and governing authority regulations. Every property has inherent risks due to location and acts of God which may cause damage to structures built on said property and bodily injury or death to the occupants of said structures. SEADC does not in any way guarantee the suitability of any area for construction or habitation, and will not be held liable for damages based on the location of said structure. General Contractor to verify all field conditions, code requirements, insure compliance of proposed structure with said conditions, verify all dimensions and techniques in construction documents, and notify SEADC of any discrepancies before construction.

Index

01 floor plans
02 exterior elevations
03 garage plan & elevations
04 building sections, wall section
05 foundation plan, framing plans
06 notes and details
07 electrical plans
08 optional slab foundation

Door Schedule

quantity	·	width	height	action	notes
1	10	3'-0"	6'-8"	swing	exterior, insulated
1	11	16'-0"	8'-0"	overhead	insulated garage door

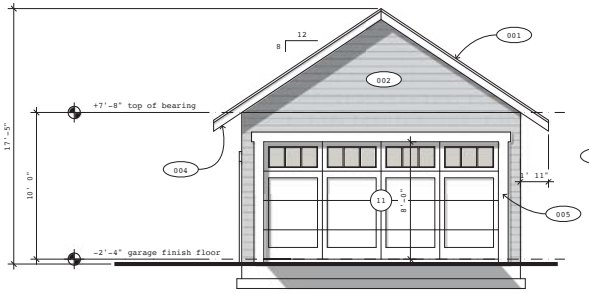

Garage - Front Exterior Elevation
scale: 1/4" = 1'-0"

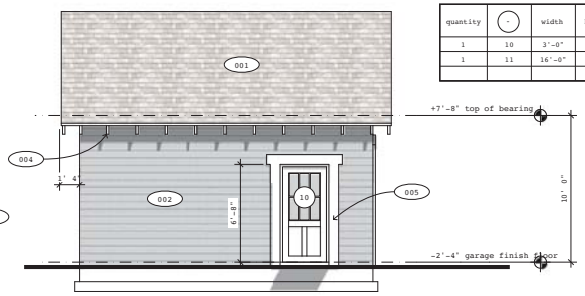

Garage - Left Side Exterior Elevation
scale: 1/4" = 1'-0"

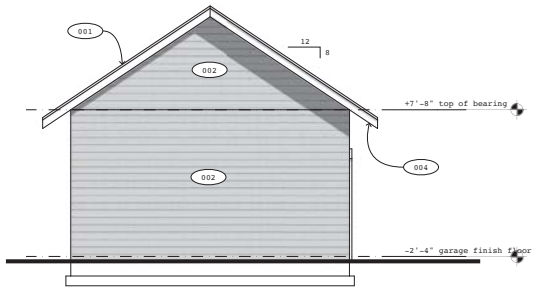

Garage - Rear Exterior Elevation
scale: 1/4" = 1'-0"

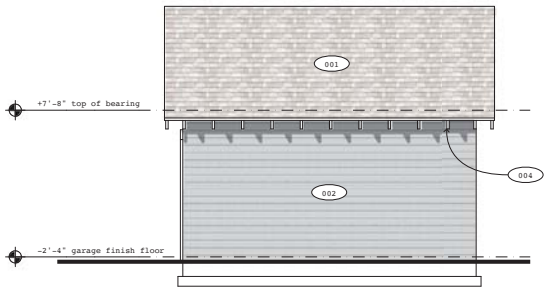

Garage - Right Side Exterior Elevation
scale: 1/4" = 1'-0"

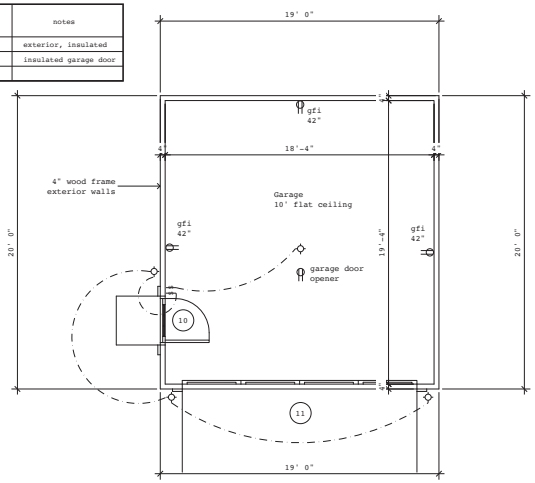

Garage Floor Plan with Electrical Notations
scale: 1/4" = 1'-0"

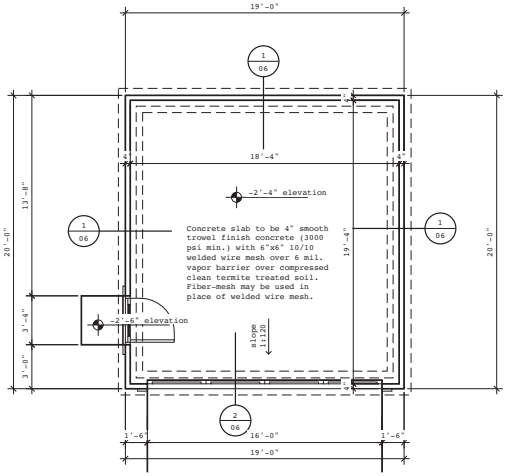

Garage - Foundation Plan
scale: 1/4" = 1'-0"

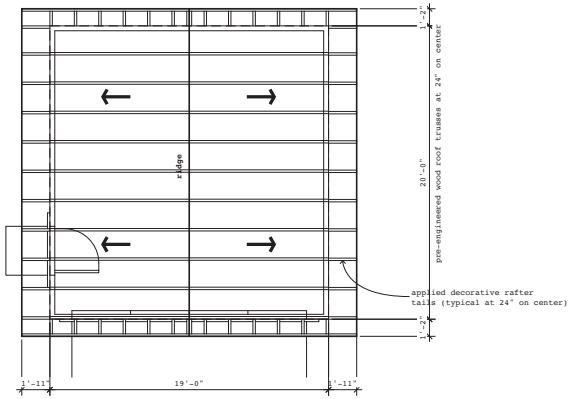

Garage - Roof Plan
scale: 1/4" = 1'-0"

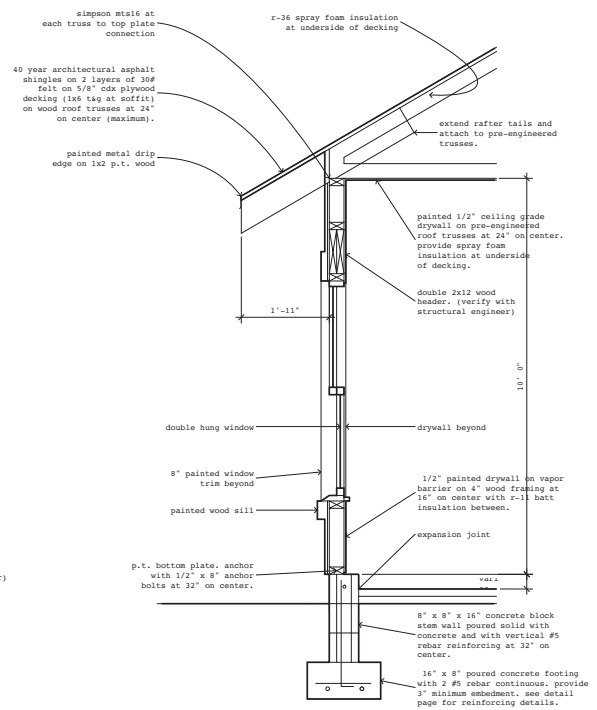

Typical Wall Section at Garage
scale: 3/4" = 1'-0"

SEADC

205 Ostrom Drive San
Antonio, TX 78212

202-792-8733

205 Ostrom Drive
with wood frame construction

Area Calculations
Floor1 **1042**, Floor2 **1038**
Living **2080**
Porches **329**, Garage **380**
Under Roof **2789 sf**

Release Date
August 17 , 2018

Copyright
SEADC reserves the rights to these documents and to all designs contained herein. No copies or alterations are to be made without the written permission of SEADC. All plans published are protected under the Federal Copyright Act, Title 17 of the United States Code, and Chapter 37 of the Code of Federal Regulations.

Liability Disclaimer
Placement of residence is based on owner's desired location and governing authority regulations. Every property has inherent risks due to location and acts of God which may cause damage to structures built on said property and bodily injury or death to the occupants of said structures. SEADC does not in any way guarantee the suitability of any area for construction or habitation, and will not be held liable for damages based on the location of said structure. General Contractor to verify all field conditions, code requirements, insure compliance of proposed structure with said conditions, verify all dimensions and techniques in construction documents, and notify SEADC of any discrepancies before construction.

Index

01 floor plans
02 exterior elevations
03 garage plan & elevations
04 building sections, wall section
05 foundation plan, framing plans
06 notes and details
07 electrical plans
08 optional slab foundation

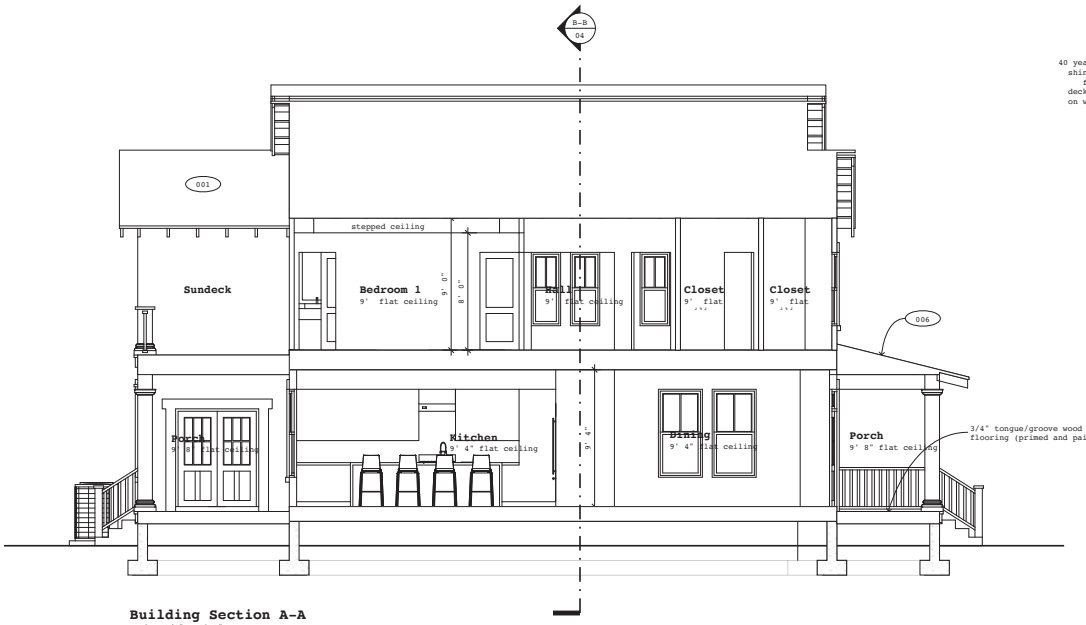

Building Section A-A
scale: 1/4" = 1'-0"

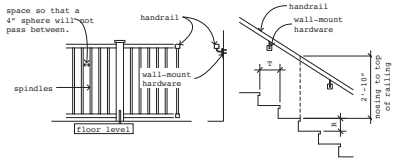

Tread (T)
Maximum: 11-1/2"
Minimum: 10"

Riser (R)
Maximum: 7-1/2"
Minimum: 6-3/4"

Provide 7'-0" minimum headroom above stairs.

2 Risers (R) + 1 Tread (T) = 24-25"

Maximum total variation between all risers to be 3/8" total.

Stair Detailing
not to scale

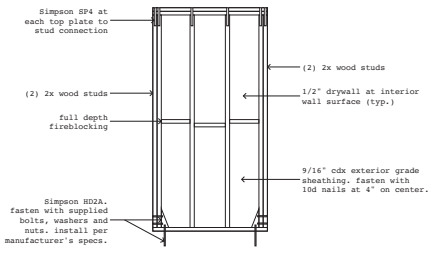

Shear Wall Detail / Braced Wall Lines
scale: not to scale

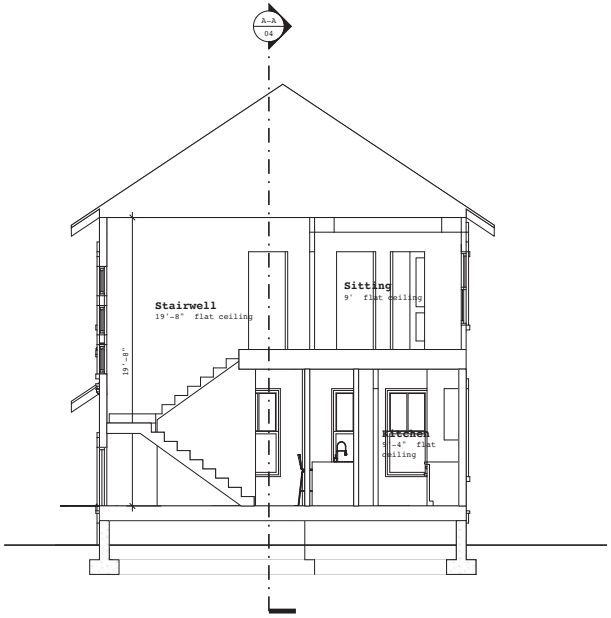

Building Section B-B
scale: 1/4" = 1'-0"

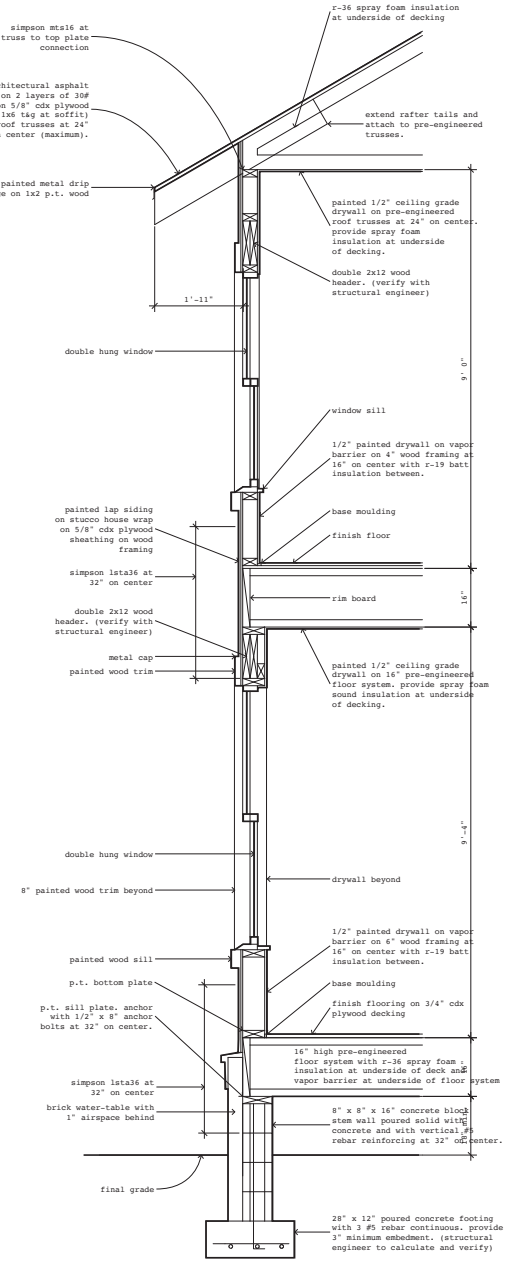

Wall Section A
scale: 3/4" = 1'-0"

SEADC

205 Ostrom Drive San Antonio, TX 78212

202-792-8733

205 Ostrom Drive
with wood frame construction

Area Calculations
Floor1 **1042**, Floor2 **1038**
Living **2080**
Porches **329**, Garage **380**
Under Roof **2789 sf**

Release Date
August 17 , 2018

Copyright
SEADC reserves the rights to these documents and to all designs contained herein. No copies or alterations are to be made without the written permission of SEADC. All plans published are protected under the Federal Copyright Act, Title 17 of the United States Code, and Chapter 37 of the Code of Federal Regulations.

Liability Disclaimer
Placement of residence is based on owner's desired location and governing authority regulations. Every property has inherent risks due to location and acts of God which may cause damage to structures built on said property and bodily injury or death to the occupants of said structures. SEADC does not in any way guarantee the suitability of any area for construction or habitation, and will not be held liable for damages based on the location of said structure. General Contractor to verify all field conditions, code requirements, insure compliance of proposed structure with said conditions, verify all dimensions and techniques in construction documents, and notify SEADC of any discrepancies before construction.

Index

01 floor plans
02 exterior elevations
03 garage plan & elevations
04 building sections, wall section
05 foundation plan, framing plans
06 notes and details
07 electrical plans
08 optional slab foundation

04

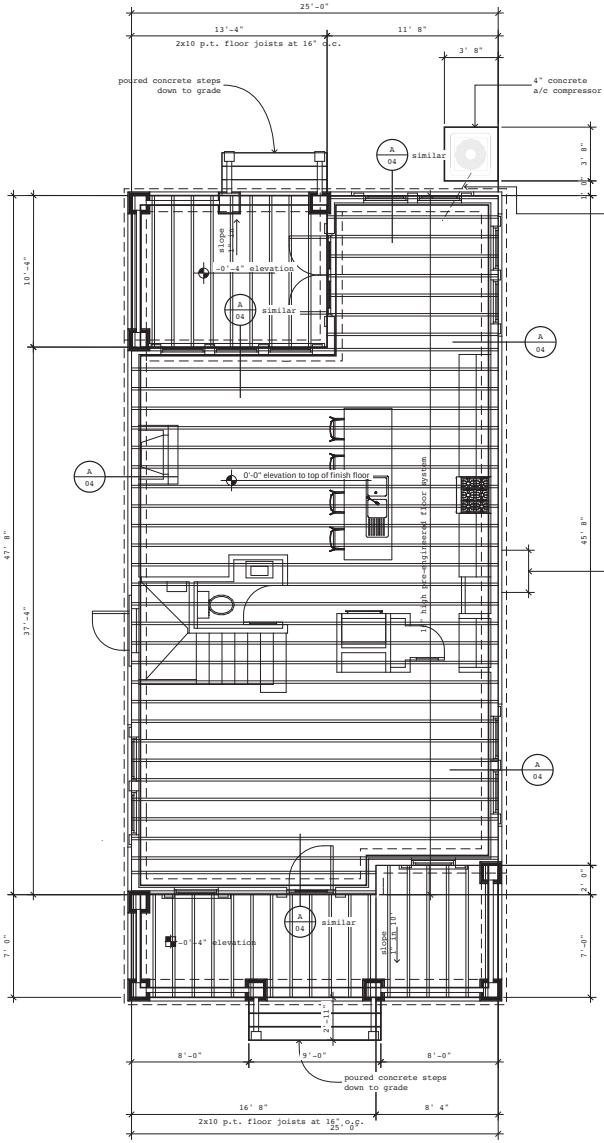

Foundation Plan, Lower Floor Framing Plan
scale: 1/4" = 1'-0"

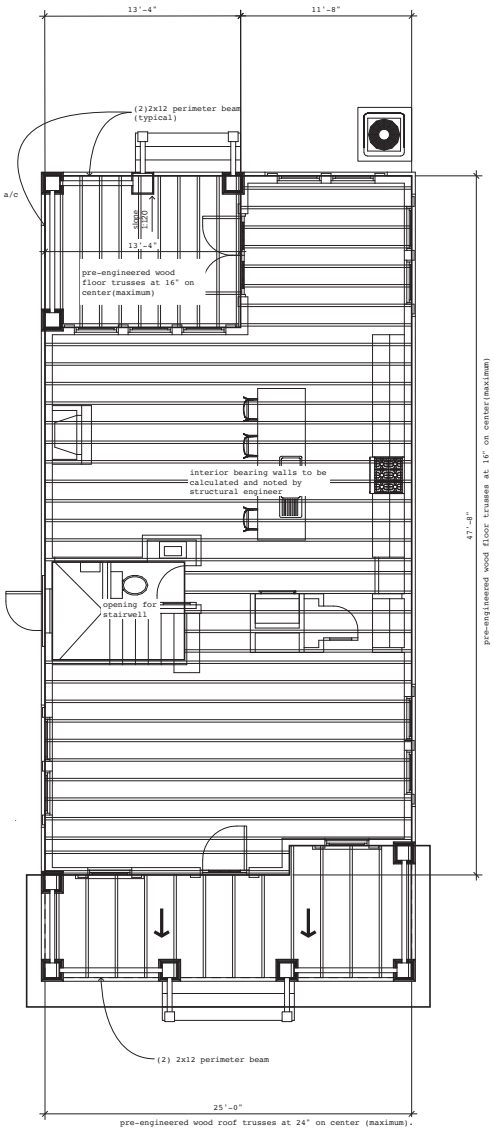

Lower Roof Plan, Upper Floor Framing
scale: 1/4" = 1'-0"

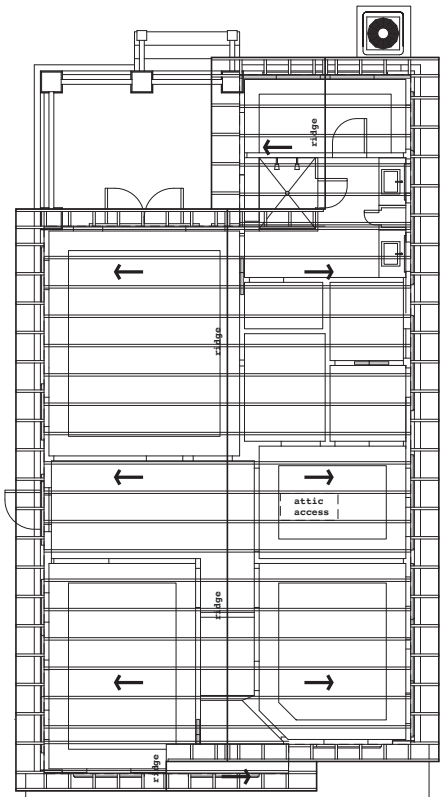

Upper Roof Plan
scale: 1/4" = 1'-0"

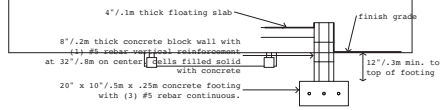

Footing Detail 01
1/2 inch equals 1 foot (1:24)

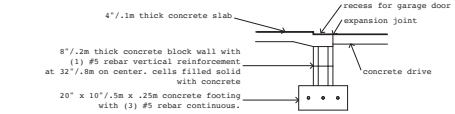

Footing Detail 02
1/2 inch equals 1 foot (1:24)

SEADC

205 Ostrom Drive San Antonio, TX 78212

202-792-8733

205 Ostrom Drive
with wood frame construction

Area Calculations
Floor1 **1042**, Floor2 **1038**
Living **2080**
Porches **329**, Garage **380**
Under Roof **2789 sf**

Release Date
August 17 , 2018

Copyright
SEADC reserves the rights to these documents and to all designs contained herein. No copies or alterations are to be made without the written permission of SEADC. All plans published are protected under the Federal Copyright Act, Title 17 of the United States Code, and Chapter 37 of the Code of Federal Regulations.

Liability Disclaimer
Placement of residence is based on owner's desired location and governing authority regulations. Every property has inherent risks due to location and acts of God which may cause damage to structures built on said property and bodily injury or death to the occupants of said structures. SEADC does not in any way guarantee the suitability of any area for construction or habitation, and will not be held liable for damages based on the location of said structure. General Contractor to verify all field conditions, code requirements, insure compliance of proposed structure with said conditions, verify all dimensions and techniques in construction documents, and notify SEADC of any discrepancies before construction.

Index

01 floor plans
02 exterior elevations
03 garage plan & elevations
04 building sections, wall section
05 foundation plan, framing plans
06 notes and details
07 electrical plans
08 optional slab foundation

05
Lot 1

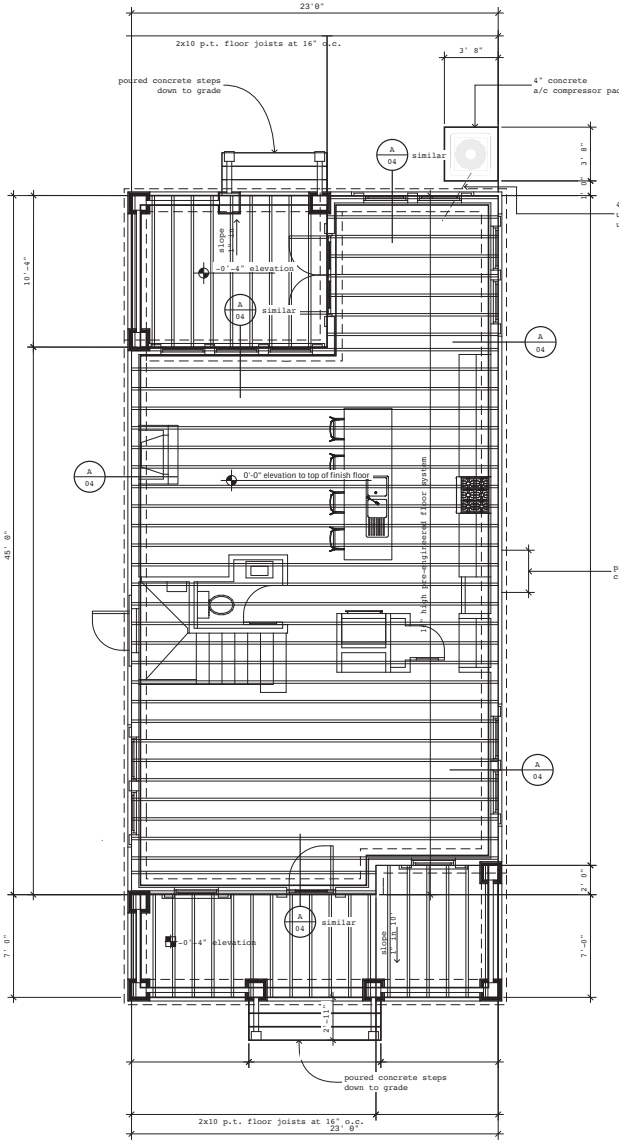

Foundation Plan, Lower Floor Framing Plan
scale: 1/4" = 1'-0"

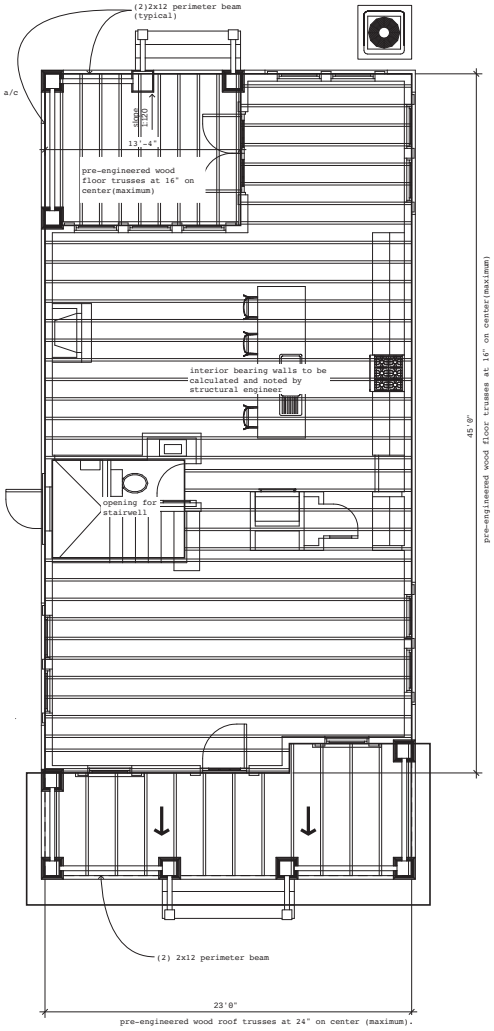

Lower Roof Plan, Upper Floor Framing
scale: 1/4" = 1'-0"

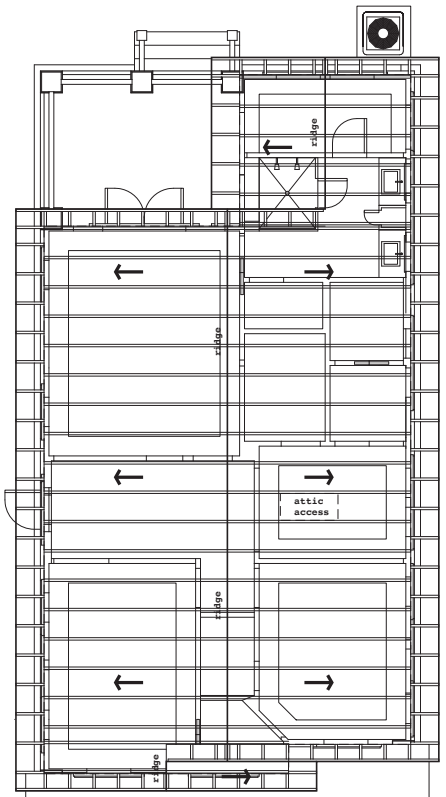

Upper Roof Plan
scale: 1/4" = 1'-0"

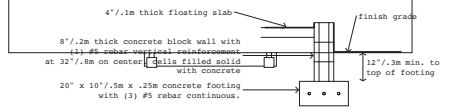

Footing Detail 01
1/2 inch equals 1 foot (1:24)

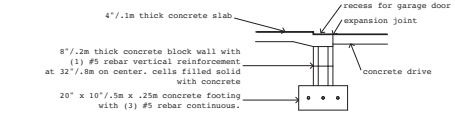

Footing Detail 02
1/2 inch equals 1 foot (1:24)

SEADC

205 Ostrom Drive San Antonio, TX 78212

202-792-8733

205 Ostrom Drive
with wood frame construction

Area Calculations
Floor1 **1042**, Floor2 **1038**
Living **2080**
Porches **329**, Garage **380**
Under Roof **2789 sf**

Release Date
August 17 , 2018

Copyright
SEADC reserves the rights to these documents and to all designs contained herein. No copies or alterations are to be made without the written permission of SEADC. All plans published are protected under the Federal Copyright Act, Title 17 of the United States Code, and Chapter 37 of the Code of Federal Regulations.

Liability Disclaimer
Placement of residence is based on owner's desired location and governing authority regulations. Every property has inherent risks due to location and acts of God which may cause damage to structures built on said property and bodily injury or death to the occupants of said structures. SEADC does not in any way guarantee the suitability of any area for construction or habitation, and will not be held liable for damages based on the location of said structure. General Contractor to verify all field conditions, code requirements, insure compliance of proposed structure with said conditions, verify all dimensions and techniques in construction documents, and notify SEADC of any discrepancies before construction.

Index

01 floor plans
02 exterior elevations
03 garage plan & elevations
04 building sections, wall section
05 foundation plan, framing plans
06 notes and details
07 electrical plans
08 optional slab foundation

05
Lot 2

General Notes

General Contractor to verify all field conditions, and insure compliance of proposed structure with said conditions. General Contractor to verify all dimensions in construction documents, and notify designer of any discrepancies before construction.

All products and materials to be installed according to manufacturer's specifications.

During adverse weather conditions, including wind speeds in excess of 60 m.p.h., workers are to secure all materials, tools, etc., leave work site immediately, and seek proper shelter.

Foundations

Foundations are designed for an assumed allowable soil bearing pressure of 2000 psf (95kPa) on compacted fill. Before construction commences, soil bearing capacity shall be verified by a subsurface investigation, as well as field and laboratory tests performed by a certified testing laboratory whose report shall include analysis and recommendations for site preparation in order to bear the foundation loads. The above report shall be submitted to the structural engineer for review before foundation construction begins.

Concrete

Concrete shall be per an approved mix design proportioned to achieve a 28 day strength of 3000 psi (143kPa) with a plastic and workable mix. Slump shall be four inches plus or minus one inch. Concrete shall be placed and cured according to ACI standards and specifications. Submit proposed mix design with recent field cylinder or lab tests for review prior to use. Mix shall be uniquely identified by mix number or other positive identification. Mix shall meet the requirement of ASTM C-33 for coarse aggregate.

Addition of water to concrete already transported from the batch plant is not allowed under any circumstances.

Concrete Testing

An independent testing laboratory shall perform the following tests on cast in place concrete.

ASTM C143 - Standard test method for slump of portland cement concrete.
ASTM C39 - Standard test method for compressive strength of cylindrical concrete specimen.

A separate test shall be conducted for each class, for every 50 cubic yards (38kl) (or fraction thereof), placed per day. Required cylinder(s) quantities and test age is as follows: 1 at 3 days, 1 at 7 days, 2 at 28 days.

One additional reserve cylinder to be tested under the direction of the engineer, if required. If 28 day strength is achieved, the additional cylinder(s) may be discarded.

Welded Wire Fabric

Welded wire fabric shall conform to ASTM A-185, be free from oil, scale, and rust, and shall be placed in accordance with the typical placing details of ACI standards and specifications. Minimum lap shall be one space plus two inches.

Reinforcing Steel

Reinforcing steel shall be ASTM A-615 grade 40 deformed bars, free from oil, scale and rust, and shall be placed in accordance with the typical bending diagram and placing details of ACI standards and specifications.Minimum overlap of 25" (.6m) (see typical footing corner). Steel coverage for footings and slabs (against earth) to be 3" (7.6cm). Vertical wall reinforcing steel at 6' (1.8m) on center, both sides of openings, and 2 cells both sides att spans over 8' (2.4m)

Masonry Walls

Masonry units shall be ASTM C-90 for hollow load bearing type masonry with unit strength of 1900 psi/ 90.9kPa on the net area (fm = 1500 psi / 71.8kPa). Mortar shall be type M or S and meet ASTM C-270. Grout shall be 2000psi/95.76kPa minimum compressive strength and meet ASTM C-476. Slump shall be 8-11" (.2-.27m). Do not fill masonry cells with concrete.

Floor plan dimensions are from face to face of an assumed 8" (.2m) wall construction.

Provide hooked dowels in footings for all vertical reinforcing above. Provide 40" (1m) overlap for #5 rebar, 48" (1.2m) for #6 rebar, and 56" (1.4m) overlap for #7 rebar.

Provide 9 gauge galvanized horizontal joint reinforcing (Dur-o-Wall or engineer approved equal) at alternate block courses.

Chemical Anchors

Chemical anchors shall be an epoxy polymer injection system such as ITW/Ramset Epcon, Rawl, Power-Fast, Simpson or engineer approved equal, installed in accordance with manufacturer's instructions. Installers shall be trained by the manufacturer's representatives.

Typical Footing Corner

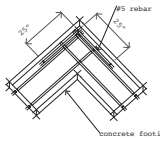

Wood

Structural wood components (beams, joists, rafters, etc.) shall have the following minimum allowable fiber stresses of no.2 southern pine conforming to 1997 NDS, as follows:

Shear Fv = 90 psi / 620 kPa
Bending 2x4 or 2x6 Fb = 1250 psi / 8618kPa
Bending 2x8 Fb = 1200 psi / 827bkPa
Bending 2x10 Fb = 1050 psi / 7239kPa
Bending 2x12 Fb = 975 psi / 6722kPah

Wood in contact with concrete of masonry, and at other locations as shown on structural drawings, shall be protected or pressure treated in accordance with AITC 109.

All wall framing to be Spruce, #2 grade. Floor plan dimensions are from face to face of an assumed 4", 6", or 8" (.1m, .15m, or .2m) wall construction.

Attached wall sheathing with 8d common nails at 4" (.1m) on center on panel edges and 8" (.2m) on center at intermediate locations

Micro-Lam beams shall conform to NER 126 and shall be 2.0 E 8.P. (Fb = 2925psi / 20,167kPa, E = 2,000,000psi /13,789,514kPa)

Joists and rafters shall be laterally supported at ends by solid blocking or other means to prevent rotation of member.

Pneumatic framing nails are an acceptable alternate to 10d common nails.

All metal connectors shall be galvanized. Connector model numbers shown are Strong-Tie connectors as manufactured by Simpson Strong-Tie Company, Inc., 1450 Doolittle Drive, PO Box 1568, San Leandro, CA 94577. Substitutions are acceptable with the approval of the engineer of record. Unless shown otherwise, install size and number of fasteners shown in the latest Simpson catalog.

Standard washers shall be used between wood and bolt heads and nuts. Bolts and screws shall be ASTM A-307

Multi-member wood rafters, beams, and ledgers shall be fastened together with 10d common nails in evenly spaced staggered patterns as shown below, unless noted otherwise. For multi-ply members of three or more, the nails shall be installed successively. Nail the first two members together as shown below, then attach the third ply, and then additional layers. All multi-ply members shall be full length except for ledger members.

Multi-member Connections

maintain 2" clearance from end and 1" clearance from edges.

2x4 & 2x6 (4 nails per ft.) | 2x8 & 2x10 (5 nails per ft.) | 2x12 (6 nails per ft.)

Wood Header Spans

header	supports 0 floors 0 roofs	supports 0 floors 1 roof	supports 1 floors 1 roof	supports 2 floors 1 roof
(2) 2x4	up to 4	up to 4'	–	–
(2) 2x6	4' to 6'	4' to 6'	up to 4'	up to 4'
(2) 2x8	6' to 8'	6' to 8'	4' to 6'	4' to 6'
(2) 2x10	8' to 10'	8' to 10'	6' to 8'	6' to 8'
(2) 2x12	10' to 12'	10' to 12'	8' to 10'	8' to 10'

Span chart based on 10' (3m) tributary floor and roof loads.Span chart based on header providing support for wall height equal to width of opening. Nominal 4" (.1m) wide single headers may be substituted for the double members. Spans are based on #2 or standard grade lumber. #3 grade lumber may be used with appropriate design.

Header Framing Detail

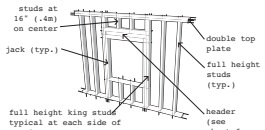

(1) up to 3'/.9m opening
(2) up to 5'/1.5m opening
(3) up to 7'/2.1m opening
(4) up to 9'/2.7m opening

Wood Trusses (pre-fabricated metal plate connected)

Engineered wood truss systems shall be designed by supplier's specialty engineer to configuration and load-carrying capacity shown on plans. Submit shop drawings for review prior to fabrication. Shop drawings shall show and specify all connector types utilized within trusses, as well as connectors utilized in all other connections and attachments between trusses or components supplied as part of the engineered truss system. All truss to truss connections are the responsibility of the truss specialty engineer. An erection drawing shall be included, identifying all truss system components, as well as all permanent bracing required for truss design. The following load duration factors shall be used in the design of the truss system:

Dead load 0.90
Dead load + floor live load = 1.00
Dead load + roof live load = 1.25
Dead load + wind load = 1.33

Shop drawings and calculations for the engineered truss system shall be signed and sealed by a professional engineer registered in the permit state. Secure approval of shop drawings prior to commencing fabrication.

Trusses shall be designed for the loads as indicated on the framing plans. Allowable stres increases shall be as identified in NFPA NDS 1997 unless superseded by requirements of the applicable building code. Prefabricated wood trusses shall be fabricated from southern pine kiln dried #2 grade or better for chords, and #3 grade or better for webs. No wane, knots, skips or other defects shall occur in the plate contact area or scarfed area of web members. Plates shall be centered with one required each side of truss. Bearing locations must be marked on trusses by fabricator to ensure proper installation. Truss engineer to utilize only load bearing walls indicated on plan for bearing and tie-down.

Where bottom chords of trusses do not have solid sheathing, provide permanent 2x4x10' (3m) (minimum length) lateral braces at 10' (3m) on center (maximum) unless closer spacing is required by truss engineer's analysis. Stagger splices min. 4'/ 1.2m and attach with (2) 12d nails at each truss. Terminate bracing runs at wals or with diagonal cross brace each end. Conform to Truss Plate Institute: HIB-91 Handling Installing and Bracing of Metal Plate Connected Wood Trusses.

Reference construction drawings for sloped ceiling, trays, steps and other special ceiling features. Reference construction drawings for roof top units, exhaust fans, kitchen hoods and other l oads suspended or supported by trusses for location, loads, and physical size. Truss girder and multi-ply truss configurations to accommodate openings and special loading shall be provided by the truss manufacturer.

A certified testing agency shall be engaged to perform industry standard inspections to ensure conformance with plans and specifications.

Engineer of record requires that the engineered drawings for the wood components on the referenced project be reviewed for compatibility with the design intent of the structure prior to fabrication.

Wood trusses shall be designed, signed and sealed by a professional engineer registered in the permit state, and fabricated in conformance with the Quality Control Manual by Truss Plate Institute (TPI).

Design, handling, erection, temporary and permanent bracing of metal plate connected wood trusses shall be in accordance with the applicable building code referenced above, the National Forest Products Association: National Design Specification for Wood Construction 1997, Truss Plate Institute: HIB-91 Handling Installing and Bracing of Metal Plate Connected Wood Trusses, Truss Plate Institute: DSB-89 Temporary Bracing of Metal Plate Connected Wood Trusses, ANSI/Truss Plate Institute: I-1995 National Design Standard for Metal Plate Connected Wood Truss Construction.

Truss repairs required during the progress of work are to be designed by the truss engineer with required materials and hardware to be provided by the truss manufacturer. Field repairs made to trusses are to be supervised and inspected by the truss manufacturer's representative. Written confirmation of repair acceptance by the truss manufacturer is required on all repairs and must be submitted to the engineer of record for acceptance. Nail-on type truss repair plates will not be allowed in a bottom chord tension splice.

Floor Decking and Blocking

Fasten sheathing panels to framing and blocking with 10d common or 10d hot dipped galvanized nails at 6"/.15m on center at all panel edge framing and 12"/.3m on center at all intermediate framing. Glue all connections.

Provide bracing in the first two framing spaces at each end of floor system, spaced 4"/.15m on center maximum. Bracing members shall be full depth joist or truss.

Ceilings

Attach gypsum board ceilings with 5d nails at 7"/. 17m on center (typical) Apply two layers of 1/2" (1.2cm) type 'x' gypsum board at garage ceilings with habitable space above.

Penetrations

No penetrations shall be made in any structural members other than those located on these drawings without previous approval of the engineer.

Gable End Bracing Detail

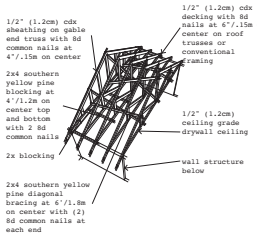

Roof Sheathing

Zone 1: use 8d common nails 6"/.15m on center at edges and 12"/.3m on center intermediate
Zone 2: use 8d common nails 6"/.15m on center
Zone 3: use 8d comon nails 4"/.15m on center

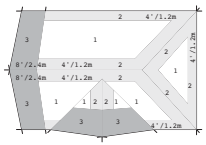

Nailing Schedule

	connection	nail type	nailing
1	joist to sill or girder	toe	(3) 8d
2	bridging to joist	toe	(2) 8d
3	1x6 subfloor or less to each joist	face	(2) 8d
4	>1x6 subfloor to each joist	face	(3) 8d
5	2"/5cm subfloor to joist or girder	blind & face	(2) 16d
6	sole plate to joist or blocking	face	16d @ 16"oc
7	top plate to stud	end	(2) 16d
8	stud to sole plate	toe	(4) 8d
	stud to sole plate	end	(2) 16d
9	double studs	face	16d @ 24"oc
10	double top plate	face	16d @ 16"oc
11	top plate, laps & intersections	face	(2) 16d
12	continuous header (2 pieces)	along each edge	16d @ 16"oc
13	ceiling joists to plate	toe	(3) 8d
14	continuous header to stud	toe	(4) 8d
15	ceiling joist, laps over partition	face	(3) 16d
16	ceiling joist to parallel rafters	face	(3) 16d
17	rafter to plate	toe	(3) 8d
18	1"/2.5cm brace to ea. stud & plate	face	(2) 8d
19	1x8 sheathing or less to each bearing	face	(2) 8d
20	wider than 1x8 sheathing to each bearing	face	(3) 8d
21	built up corner studs		16d @ 24"oc
22	built up girder and beams		(2) 20d at each end and splices, and 32"oc staggered.
23	2" planks, each bearing		(2) 16d

SEADC

205 Ostrom Drive San Antonio, TX 78212

202-792-8733

205 Ostrom Drive

with wood frame construction

Area Calculations
Floor1 **1042**, Floor2 **1039**
Living **2080**
Porches **329**, Garage **380**
Under Roof **2789 sf**

Release Date
August 17 , 2018

Copyright
SEADC reserves the rights to these documents and to all designs contained herein. No copies or alterations are to be made without the written permission of SEADC. All plans published are protected under the Federal Copyright Act, Title 17 of the United States Code, and Chapter 37 of the Code of Federal Regulations.

Liability Disclaimer
Placement of residence is based on owner's desired location and governing authority regulations. Every property has inherent risks due to location and acts of God which may cause damage to structures built on said property and bodily injury or death to the occupants of said structure. SEADC does not in any way guarantee the suitability of any area for construction or habitation, and will not be held liable for damages based on the location of said structure. General Contractor to verify all field conditions, code requirements, insure compliance of proposed structure with said conditions, verify all dimensions and techniques in construction documents, and notify SEADC of any discrepancies before construction.

Index

01 floor plans
02 exterior elevations
03 garage plan & elevations
04 building sections, wall section
05 foundation plan, framing plans
06 notes and details
07 electrical plans
08 optional slab foundation

Electrical Notes

All electrical work shall be in accordance with the 2014 US national electric code.

Switched flood lamps in owner-specified locations.

Provide 220v electrical service as required for owner-specified a/c compressor locations.

120-240v Electrical Panel Detail

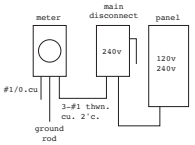

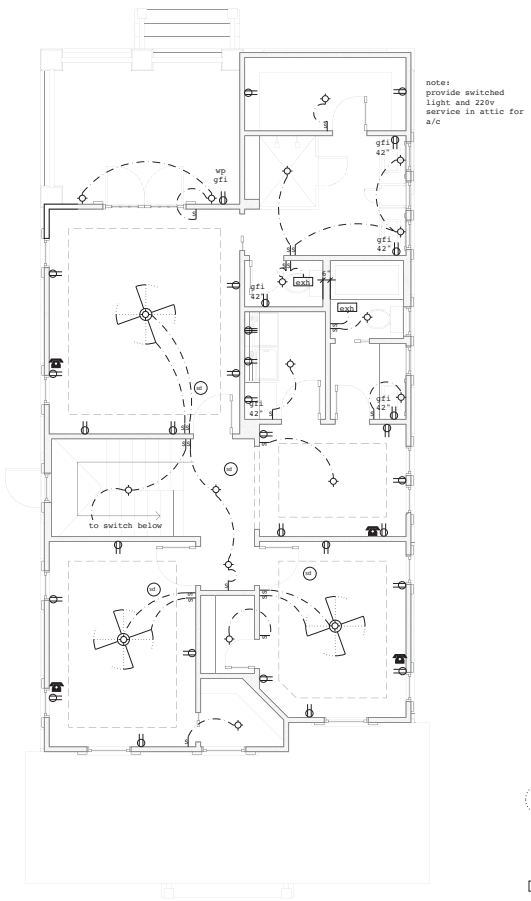

Second Floor Electrical Plan

scale: 1/4" = 1'-0"

Electrical Legend

- 120v receptacle. receptacles in sleeping rooms to be arc-fault interrupted.
- 240v receptacle
- sd — smoke detector & alarm. hard-wired and interconnected with supplemental power.
- light fixture
- light fixture - pendant or chandelier
- recessed light fixture
- light switch
- D — dimmer
- exh — exhaust fan vented to exterior
- wp — waterproof
- gfi — ground fault circuit interrupted
- 42" — mounted 42" (1.0m) above the floor
- cat6 — category 6 network cabling
- phone line
- tv — coaxial cable
- co — carbon monoxide alarm. hard wired with supplemental power.

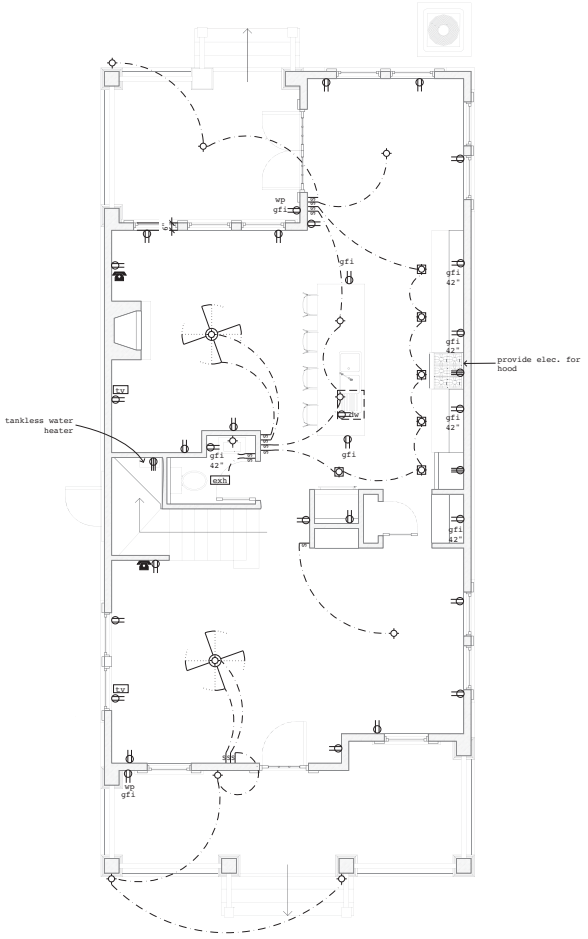

First Floor Electrical Plan

scale: 1/4" = 1'-0"

SEADC

205 Ostrom Drive San Antonio, TX 78212

202-792-8733

205 Ostrom Drive
with wood frame construction

Area Calculations
Floor1 **1042**, Floor2 **1028**
Living **2080**
Porches **329**, Garage **380**
Under Roof **2789 sf**

Release Date
August 17 , 2018

Copyright
SEADC reserves the rights to these documents and to all designs contained herein. No copies or alterations are to be made without the written permission of SEADC. All plans published are protected under the Federal Copyright Act, Title 17 of the United States Code, and Chapter 37 of the Code of Federal Regulations.

Liability Disclaimer
Placement of residence is based on owner's desired location and governing authority regulations. Every property has inherent risks due to location and acts of God which may cause damage to structures built on said property and bodily injury or death to the occupants of said structures. SEADC does not in any way guarantee the suitability of any area for construction or habitation, and will not be held liable for damages based on the location of said structure. General Contractor to verify all field conditions, code requirements, insure compliance of proposed structure with said conditions, verify all dimensions and techniques in construction documents, and notify SEADC of any discrepancies before construction.

Index

01 floor plans
02 exterior elevations
03 garage plan & elevations
04 building sections, wall section
05 foundation plan, framing plans
06 notes and details
07 electrical plans
08 optional slab foundation

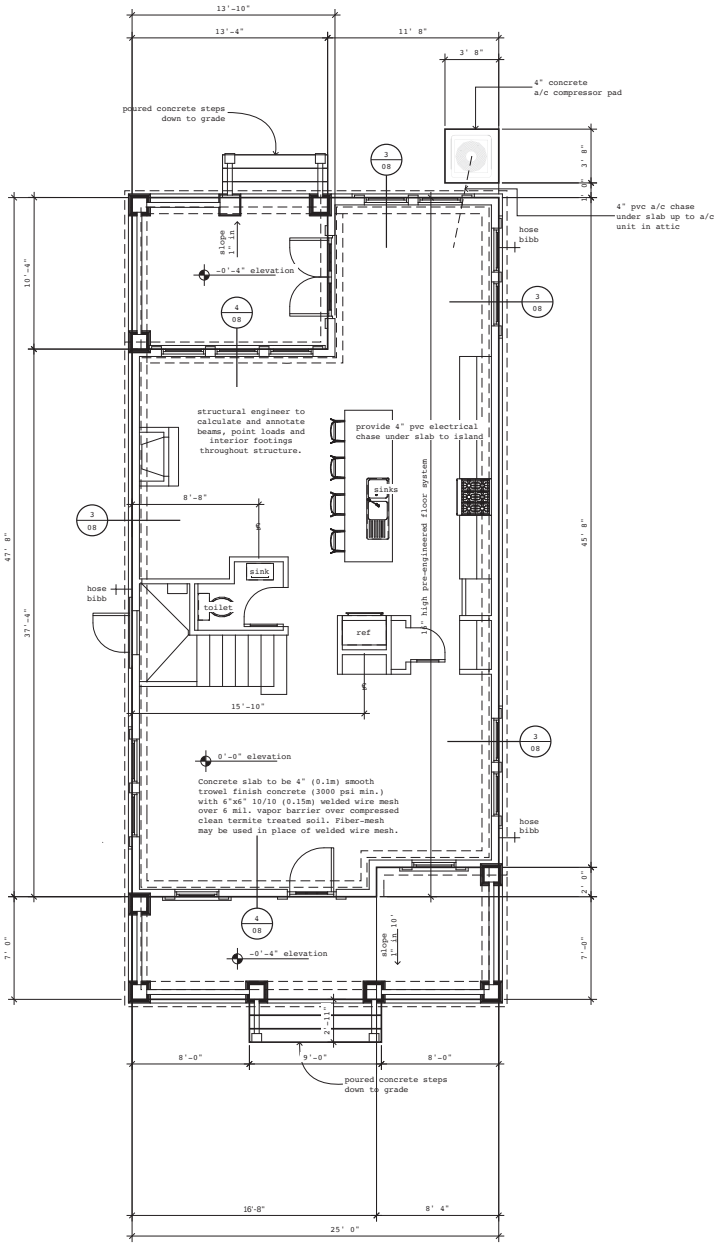

Foundation Plan
scale: 1/4" = 1'-0"

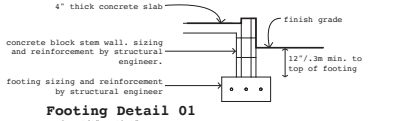

Footing Detail 01
scale: 1/2" = 1'-0"

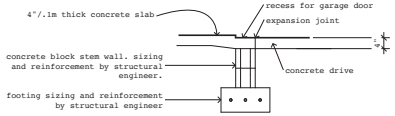

Footing Detail 02
scale: 1/2" = 1'-0"

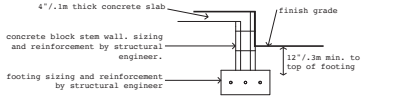

Footing Detail 03
scale: 1/2" = 1'-0"

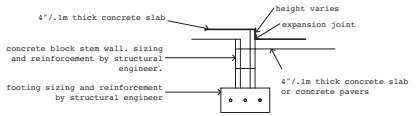

Footing Detail 04
scale: 1/2" = 1'-0"

Notes:

Exterior mechanical equipment to be located by builder and homeowner as per site requirements. Provide chase from exterior to interior mechanical equipment.

set footing depth as required to protect from frost.

structural engineer to calculate and annotate beams and point loads throughout structure.

SEADC

205 Ostrom Drive San
Antonio, TX 78212

202-792-8733

205 Ostrom Drive
with wood frame construction

Area Calculations
Floor1 **1042**, Floor2 **1038**
Living **2080**
Porches **329**, Garage **380**
Under Roof **2789 sf**

Release Date
August 17 , 2018

Copyright
SEADC reserves the rights to these documents and to all designs contained herein. No copies or alterations are to be made without the written permission of SEADC. All plans published are protected under the Federal Copyright Act, Title 17 of the United States Code, and Chapter 37 of the Code of Federal Regulations.

Liability Disclaimer
Placement of residence is based on owner's desired location and governing authority regulations. Every property has inherent risks due to location and acts of God which may cause damage to structures built on said property and bodily injury or death to the occupants of said structures. SEADC does not in any way guarantee the suitability of any area for construction or habitation, and will not be held liable for damages based on the location of said structure. General Contractor to verify all field conditions, code requirements, insure compliance of proposed structure with said conditions, verify all dimensions and techniques in construction documents, and notify SEADC of any discrepancies before construction.

Index

01 floor plans
02 exterior elevations
03 garage plan & elevations
04 building sections, wall section
05 foundation plan, framing plans
06 notes and details
07 electrical plans
08 optional slab foundation

08
Lot 1

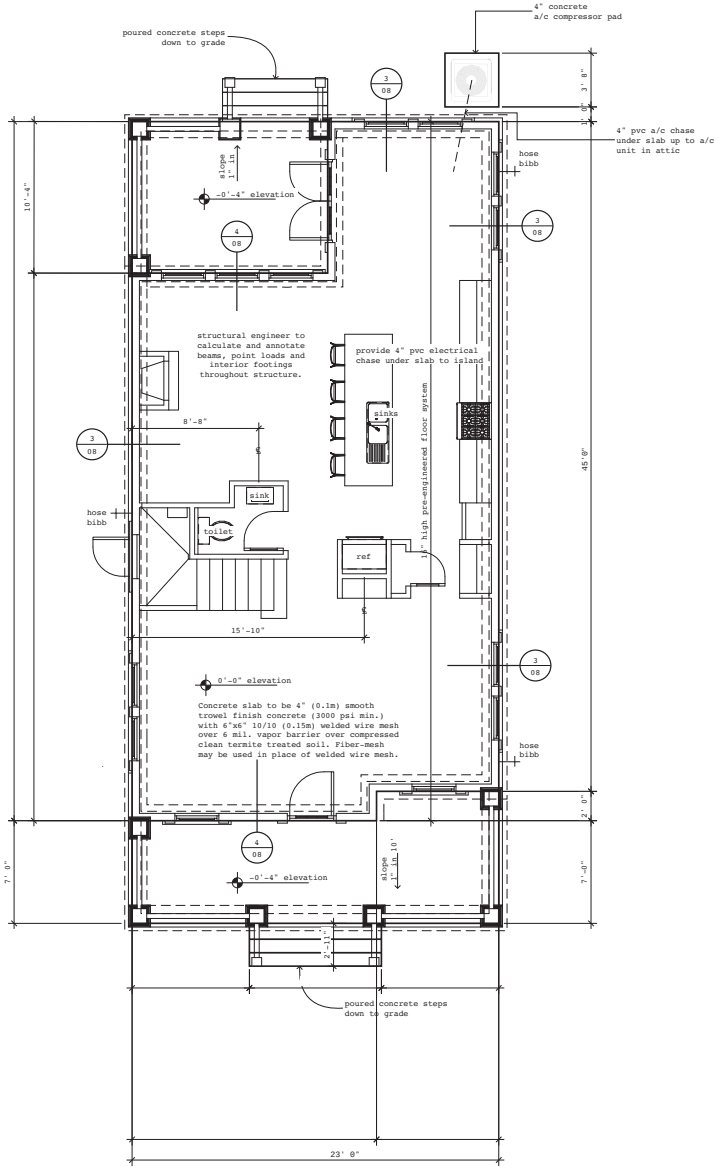

Foundation Plan
scale: 1/4" = 1'-0"

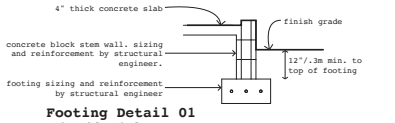

Footing Detail 01
scale: 1/2" = 1'-0"

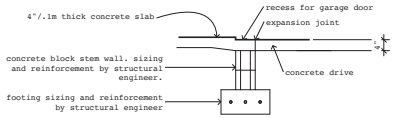

Footing Detail 02
scale: 1/2" = 1'-0"

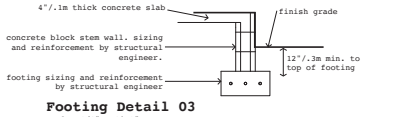

Footing Detail 03
scale: 1/2" = 1'-0"

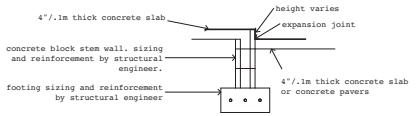

Footing Detail 04
scale: 1/2" = 1'-0"

Notes:

Exterior mechanical equipment to be located by builder and homeowner as per site requirements. Provide chase from exterior to interior mechanical equipment.

set footing depth as required to protect from frost.

structural engineer to calculate and annotate beams and point loads throughout structure.

SEADC

205 Ostrom Drive San
Antonio, TX 78212

202-792-8733

205 Ostrom Drive
with wood frame construction

Area Calculations
Floor1 **1042**, Floor2 **1038**
Living **2080**
Porches **329**, Garage **380**
Under Roof **2789 sf**

Release Date
August 17 , 2018

Copyright
SEADC reserves the rights to these documents and to all designs contained herein. No copies or alterations are to be made without the written permission of SEADC. All plans published are protected under the Federal Copyright Act, Title 17 of the United States Code, and Chapter 37 of the Code of Federal Regulations.

Liability Disclaimer
Placement of residence is based on owner's desired location and governing authority regulations. Every property has inherent risks due to location and acts of God which may cause damage to structures built on said property and bodily injury or death to the occupants of said structures. SEADC does not in any way guarantee the suitability of any area for construction or habitation, and will not be held liable for damages based on the location of said structure. General Contractor to verify all field conditions, code requirements, insure compliance of proposed structure with said conditions, verify all dimensions and techniques in construction documents, and notify SEADC of any discrepancies before construction.

Index

01 floor plans
02 exterior elevations
03 garage plan & elevations
04 building sections, wall section
05 foundation plan, framing plans
06 notes and details
07 electrical plans
08 optional slab foundation

08
Lot 2

Column Detail as requested by HDRC Staff 1-9-19

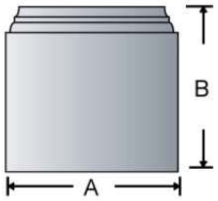

MISSION BASE

Width	Height
A	B
13- ⅝"	9- ¼"

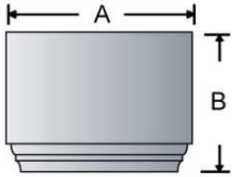

MISSION CAPITAL

Width	Height
A	B
13- ⅝"	7- ¼"

WIDTH	HEIGHT	INSIDE WIDTH	THICKNESS
11- ⅝"	108"	10- ⅜"	⅝"

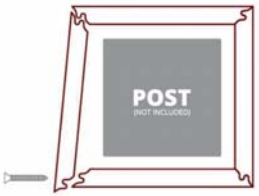

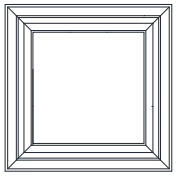

Typ. Assembly

Mission Capital & Mission Base

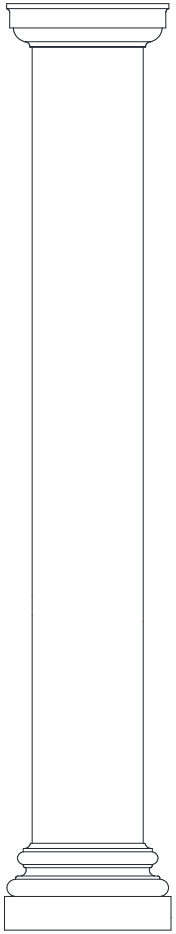

205 Ostrom Drive
San Antonio
TX 78212

12” Width x 9’ Height Column Shaft
(Wrapped on a 10 3/8” square post)

Finish:
two coats of acrylic latex paint are applied
to match proposed trim color.

12"W x 9'H Endura-Craft Square Non-Tapered Shaft, Smooth, with Mission Capital and Mission Base

Part Number: EC1209ENPMIMI

1-888-573-3768 - www.architecturaldepot.com
©ArchitecturalDepot.com - All Rights Reserved
Created on: January 11, 2019

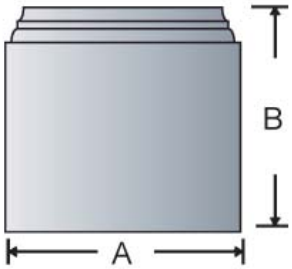

MISSION BASE

Width	Height
A	**B**
13- 5/8"	9- 1/4"

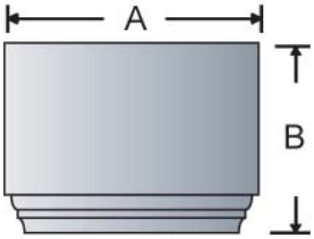

MISSION CAPITAL

Width	Height
A	**B**
13- 5/8"	7- 1/4"

Vertical edges of Craftsman shafts (tapered, non-tapered, pedestal and newel post styles) all incorporate the E-Z Lock miter joint for consistently straight miters.

1. Glue both edges.
2. Slide first joint, then second joint together.
3. Nail, screw or clamp to hold assembly until glue is fully cured.
4. Wrap around structural post, glue and attach final side
5. Glue and attach capital and base

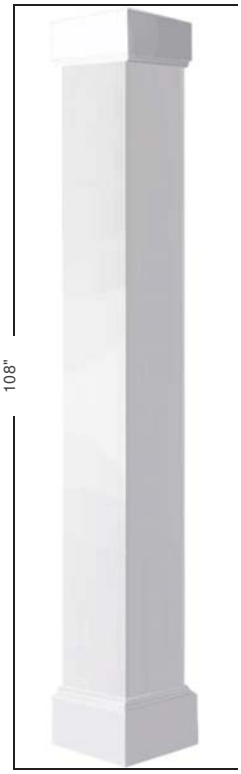

COLUMN SPECIFICATIONS

Plan Type E [1]		Trimming from bottom of shaft [2]				
Unsplit / Whole	Column Height			w/o Interfering w/Panels		Load Bearing Capacity [3]
	A			**E**	**w/base**	
□	108"	108"	98- 3/4"	13- 1/4"	4"	0 lbs.

SHAFT SPECIFICATIONS

Shaft Bottom		Shaft Top	
Outside	Inside	Outside	Inside
C*	**D****	**H***	**I****
11- 5/8"	10- 3/8"	11- 5/8"	10- 3/8"

OTHER INFORMATION

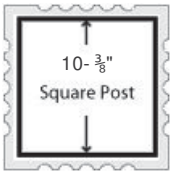

Material [4]			Wraps Post Size [5]		Weight			
Shaft	Capital	Base	Round (Fits up to)	Square (Fits up to)	Shaft	Capital	Base	Total
PVC	PVC	PVC	10- 3/8"	10- 3/8"	67.00 lbs.	7.91 lbs.	10.08 lbs.	84.99 lbs.

EXTERIOR COLUMNS

INTERIOR COLUMNS

SQUARE COLUMNS

COMMERCIAL COLUMNS

ABOUT ENDURA-CRAFT COLUMN **MATERIALS**

Made of cellular PVC that resists the tests of time and weather, Endura-Craft Columns are the best high-performance product on the market. Choose from our inspired collection of Endura-Craft Columns to add elegant details in a variety of applications.

PVC IS **BEAUTIFUL**

While Endura-Craft Columns readily accept paints and stains, it comes in a crisp, semi-matte white finish. Its profile is white throughout, and it's protected with UV inhibitors, making it resistant to fading or yellowing over time. And, with sealed edges, they are easier to clean even if it does get dirty.

PVC IS **WORKABLE**

Craft a work of art with materials that are easily milled, shaped, and moulded using standard woodworking tools. Endura-Craft Columns can be routed and cut without chip outs, fastened close to edges without splits, and can easily be trimmed using standard woodworking tools. They're also easy to install-saving you time and labor costs.

PVC IS **DURABLE**

With Endura-Craft Columns, you can feel confident your work will not rot, cup, split, twist or warp. It's moisture and insect resistant, doesn't require paint for protection, and suitable for ground and masonry contact. That promise is backed by a manufacturers 25-year limited warranty.

PVC IS **UNIFORM**

With consistent density, color, and square edges, all Endura-Craft Columns provide a uniform, architectural, aesthetic.

HELPFUL INFORMATION

1. **Plan Types**
   Endura Series Columns are as unique as the different types of installations that are available. We offer our Endura Series Columns in a wide variety of "Plan Types". These "Plan Types" are the style and type of shaft, capital, and base you will receive. If you are using them as half columns against a wall, you would want to select a "D" plan type for round or "F" plan type for square. This would give you a column that could be installed against a wall. These are the most common plan types, however, we can do custom plan types if your project requires it.

2. **Trimming from Bottom of Shaft**
   i. w/o Interfering w/Taper:
   This is the amount that can be trimmed, from the bottom of the column, before it will cut into the taper of the column.
   w/base: The base of the column "wraps" around the column shaft. If you are using a base, we recommend this dimension as the maximum amount to trim off the column shaft.
   ii. w/o Interfering w/Flutes or Panels:
   This is the amount that can be trimmed, from the bottom of the column, before it will cut into the fluting or panels of the column.
   w/base: The base of the column "wraps" around the column shaft. If you are using a base, we recommend this dimension as the maximum amount to trim off the column shaft.

3. **Load Bearing Capacity**
   See "Calculated Safe-Load **Capacities** for Endura-Stone Columns" below for details.

4. **Material Information**
   i. FRP (Fiberglass Reinforced Polymer):
   ii. Urethane (Polyurethane):
   iii. ABS (Acryloniterile Butadiene Styrene):
   iv. PVC (Expanded Cellular PVC):
   v. Endura-Glass (Fiberglass):

5. **Wraps Post Size**
   This is the size post this column can wrap around. The column can be ordered in halves to wrap around an existing post, or if you are installing the post and the column at the same time, you can slide the post through the column shaft, capital, and base.

MORE GREAT PRODUCTS

We offer a complete selection of columns perfect for the interior or exterior of your home. We also offer a complete offering of balustrade and railing systems, exterior shutters, interior and exterior millwork, corbels & brackets, coffered ceilings, entry products, and more.

ARCHITECTURAL COLUMNS

BALUSTRADE SYSTEMS

RAILING SYSTEMS

EXTERIOR SHUTTERS

HDRC Design Review Committee 1/9/19: Notes and Response

CITY OF SAN ANTONIO
OFFICE OF HISTORIC PRESERVATION

Historic and Design Review Commission
Design Review Committee
Report & Recommendation

DATE: JANUARY 9, 2019 HDRC Case# 2018-569

ADDRESS: 105 OSTROM Meeting Location: 1901 S ALAMO

APPLICANT: AIDEN MULHERN/TOBIAS STAPLETON

DRC Members present: MICHAEL GUARINO, EDWARD GARZA, SCOTT CARPENTER

Staff present: EDWARD HALL

Others present:

REQUEST: DEMOLITION WITH NEW CONSTRUCTION OF TWO, TWO STORY, SINGLE-FAMILY RESIDENTIAL STRUCTURES + TWO ACCESSORY STRUCTURES

COMMENTS/CONCERNS: IS: OVERVIEW OF CONDITION OF THE HISTORIC STRUCTURE, OVERVIEW OF STRUCTURAL ENGINEERS' REPORTS (THREE REPORTS TOTAL). OVERVIEW OF UPDATES TO PROPOSED/NEW DESIGN. MG: CONCURS WITH STRUCTURAL ENGINEERS' OPINIONS - VERY SIGNIFICANT DAMAGE PRIOR TO CURRENT OWNERSHIP, LOTS OF TERMITE DAMAGE, SETTLING. EG: BELIEVES THAT THE STRUCTURE HAS LOST ARCHITECTURAL AND STRUCTURAL INTEGRITY. IS: ONE HOUSE IS 70% SMALLER THAN THE OTHER [3' NARROWER AND APPROXIMATELY 3' SHORTER]. MG: QUESTIONS REGARDING EXISTING HERITAGE TREES.

COMMITTEE RECOMMENDATION: **APPROVE [ ] DISAPPROVE [ ]**
APPROVE WITH COMMENTS/STIPULATIONS:

Committee Chair Signature (or representative) 1/9/19 Date

MG: CONSTRUCTION DOCUMENTS GENERALLY LOOK APPROPRIATE. CONSIDER ADDING PENETRATION TO NON-SEPARATED FACADES.

MG/EG: DISCUSSION REGARDING PREVIOUS CONCERNS.

EG: PROPOSED MASSING IS APPROPRIATE.

SC: WILL A MORE DETAILED SITE PLAN BE PROVIDED? [YES]

IS: MATERIALS WILL BE SALVAGED.

MG: BRICK SKIRTING APPROPRIATE. SC: VENTS NEEDED PER CODE.

Requests & Responses

Request: Identify the Tree's on Landscaping Plan on rear Dewberry Rd.
Response: Landscaping plan Provided and updated with walk paths also

Request: Consider Adding window on rear 2nd floor gable.
Response: Window inserted in plans and elevations

Request: Brick vents for crawl space
Response: Vents inserted in drawings

Requested but not in notes: Decorative Column details
Response: Column details provided as requested verbally

Validate that the previously accepted salvage plan is included in this application:
Validated this is in the plan, Old growth wood will be salvaged and reused when possible.

All above Provided 1/11/19 by email and entire file updated 1/14/19 and delivered to HDRC Offices.

(7) Sales of alcoholic beverages for on- or off-premises consumption may not be an accessory use within the respective "NA" or "R" classifications.

(8) Where accessory uses are permitted, the standards of the applicable base zoning district, as well as any overlay district on the property, shall apply including but not limited to setbacks, building heights, landscaping and other requirements outlined in this chapter except where otherwise provided in section 35-370.

(9) Temporary uses may be permitted pursuant to section 35-391.

(b) **Accessory Structures.**

(1) Accessory structures exceeding thirty (30) inches in height shall be located a minimum distance of five (5) feet from any side or rear property line. In residential districts, however, if an accessory structure has no sills, belt courses, cornices, buttresses, eaves, or similar projecting architectural features, then the minimum distance from any side or rear property line may be reduced to three (3) feet.

(2) Accessory structures on reverse corner lots shall maintain a minimum distance from the side street lot line equal to the depth of the front setback required on the lot to the rear.

(3) The maximum lot coverage of all accessory structures shall not exceed fifty (50) percent of the total area of the side and rear yards, provided that in residential districts the total floor area does not exceed a maximum of two thousand five hundred (2,500) square feet.

(4) Within nonresidential districts, accessory structures, except for carports, are prohibited within the side and rear setback areas of lots adjacent to residential district. The total floor area of all accessory structures shall not exceed two thousand five hundred (2,500) square feet.

(5) Accessory structures intended for use as accessory dwelling units shall also conform to the provisions of section 35-371.

(6) Accessory structures shall only be permitted within the side or rear yard area within all single-family and mixed residential districts, as identified in section 35-303, with the exception of carports and garages permitted pursuant to section 35-516(g). Subsection (6) shall not apply to residentially zoned property when the primary use is a church, school or other permitted nonresidential use.

(Ord. No. 2010-11-18-0985, § 2, 11-18-10) (Ord. No. 2012-10-18-0829, § 2, 10-18-12)

Accessory Requirements by COSA pg. 2

Sec. 35-370. -Accessory Use and Structure Regulations.

(a) **Accessory Uses.**

(1) An accessory use shall not be larger than twenty-five (25) percent of the gross floor area of the principal use.

(2) Notwithstanding specific limitations in Table 311-2, an accessory use shall only be allowed in a zoning district where it is permitted as a principal/primary use, and in a district of lesser intensity (as further depicted in Table 311-2), pursuant to the following table:

(A) Use authorized as a principal use by right in:	(B) May be permitted as an accessory use in:
L or I-1	I-2
L, C-3, O-2, C-2, C-1, O-1, O-1.5, or NC	I-1
C-3, O-2, C-2, C-1, O-1, O-1.5, or NC	L
C-3, O-2, C-2, C-1, O-1, O-1.5, or NC	D
O-2, C-2, C-1, O-1, O-1.5, or NC	C-3
C-2, C-1, O-1, O-1.5, or NC	O-2
C-1, O-1, O-1.5, or NC	C-2
O-1, O-1.5, or NC	C-1
O-1 or O-1.5	NC

(3) Uses that are only allowed by approval of a specific use authorization ("S") and not permitted by right ("P") in any zoning district shall not be allowed as an accessory use.

(4) Uses that are only allowed by-right in the "I-2" heavy industrial district or "MI-2" mixed heavy industrial district shall not be allowed as accessory uses in a less intense zoning district, unless they occupy no more than ten (10) percent of the gross floor area of the principal use and are fully enclosed within the principal structure.

(5) Residentially zoned property shall not have accessory uses [save home occupations (see section 35-378); ADDUs (see section 35-371); or typical residential accessory structures, e.g. garages (attached or detached); carports; fences; storage sheds; swimming pools; greenhouses/gazebos; sport courts; etc.].

(6) A use specifically prohibited by an overlay district, such as the "RIO" or "ERZD" shall not be permitted as an accessory use when located within such an overlay district.

SEADC

[SEADC]
[205 Ostrom Drive, San Antonio, TX 78212]
[202-792-8733]

RE: Response to HDRC Letter Identifying Issues with 205 Ostrom

Dear , Mr. Hall

We are in receipt of your letter on August 3rd 2018 and in response are submitting this application for demolition. Your letter only stressed the fact that the structural engineers' reports were correct, and the 27 years of abandonment has taken it's toll on the structure. I will add your comments here from that letter summarized so the HDRC Board can also see that Staff and OHP understand what we are dealing with.

Deteriorated inadequate foundation. Defective deteriorated floor supports, floor supports that are insufficient to carry the loads imposed safely. Walls, partitions and other vertical supports that split, lean, list, or buckle due to defect or deterioration or are insufficient to carry the loads imposed safely. Ceilings, roofs, ceiling or roof supports, or other horizontal members sag, split, or buckle due to defect or deterioration or are insufficient to support the loads imposed safely. Deteriorated, crumbling siding. Broken, missing, or rotted roofing materials or roof components, window glass, sashes, or frames, or exterior doors or door frames. and ..Structurally unsafe...

We can not stress enough that **life safety concerns** are very apparent, this is not just two State Registered Structural Engineers 3 Builders and numerous other professionals but board members also, as seen in the notes below and within this application.

- Site visit by HDRC Board members, **Opinion is Loss of Significance**

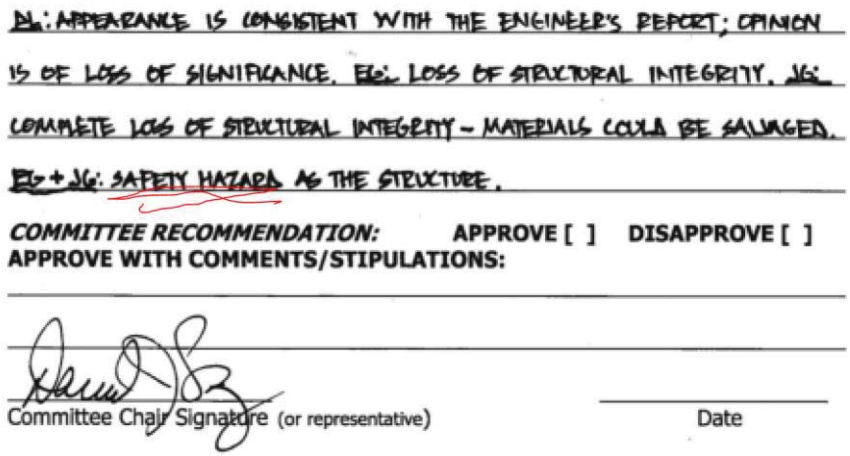
DL: APPEARANCE IS CONSISTENT WITH THE ENGINEER'S REPORT; OPINION IS OF LOSS OF SIGNIFICANCE. EL: LOSS OF STRUCTURAL INTEGRITY. JG: COMPLETE LOSS OF STRUCTURAL INTEGRITY - MATERIALS COULD BE SALVAGED. EL + JG: SAFETY HAZARD AS THE STRUCTURE.

COMMITTEE RECOMMENDATION: APPROVE [ ] DISAPPROVE [ ]
APPROVE WITH COMMENTS/STIPULATIONS:

Committee Chair Signature (or representative) Date

205 Ostrom Drive, Structural Engineer Reports **All three (3)** in agreement that the house cannot be restored In the following pages as requested by the HDRC Board I was asked to hire a structural engineer. WE HAVE ENGAGED 3 TWO AT COST TO THE OWNER AND ONE AS REQUESTED BY HDRC AT NO FEE.

I hired PK Brown Associates and they determined •the entire structure should be completely demolished••

A Second Structural Engineer Mr. Calvetti was asked by a neighbor to do an exterior only visual inspection, his results from exterior were loose and vague and again the HDRC asked that I perform a 2nd structural inspection.

To alleviate the neighbors' concerns I engaged at no fee Mr. Calvetti and allowed him access to the interior, please see his report below and here are some highlights : •I did not feel comfortable venturing very far into its interior••"not Salvageable" •a closer look revealed a severely damaged structure••" near collapse" •Severely compromised••"Piers, beams, exposed walls studs and roof framing were severely jeopardized" •I do not believe this structure is a realistic candidate for such repair and restoration••

We hired a third Structural Engineer Scott Mortensen his findings were conclusive and inline with the other Engineers, Quote "does not have structural integrity.. and should be condemned and demolished"

CALVETTI + ASSOCIATES
professional engineers

River Road HDRC
205 Ostrom Street

August 17, 2017
Page 3

Therefore, as much as I believe in the restoration of historical structures, I do not believe this structure is a realistic candidate for such repair and restoration.

If you have any comments or questions, please don't hesitate to contact my office.

Lawrence Calvetti, P.E., SECB

STATE OF TEXAS
LAWRENCE CALVETTI
36938
LICENSED
PROFESSIONAL ENGINEER

10/24/18

STATE OF TEXAS
SCOTT M. MORTENSEN
104102
LICENSED
PROFESSIONAL ENGINEER

Scott M. Mortensen PE
Principal MAE PLLC

MAE concludes that this building does not have the structural integrity to be repaired to its original condition and should be condemned and demolished.

Based on the on-site observations and our structural experience, it is our opinion that the existing house structure is unsafe for habitation, the structural members are too badly deteriorated to be repaired, and the entire structure should be completely demolished. If you have any questions, please contact me.

Respectfully Submitted,

5/31/17

STATE OF TEXAS
DAVID OWEN BROWN
45598
LICENSED
PROFESSIONAL ENGINEER

David O. Brown, P.E.
Principal
PAUL-KOEHLER-BROWN
Texas Firm Reg. No. F-11103
512-231-8910
dbrown@pkbrown.com

PAUL • KOEHLER • BROWN
consulting structural engineers, llc
8217 Shoal Creek Blvd., Suite 106, Austin, Texas 78757
(512) 231-8910 Voice (512) 231-8915 Fax

May 31, 2017

Mr. Toby Stapleton
1800 Broadway Apt. #1228
San Antonio, Texas 78215

RE: Existing House at
205 Ostrom Drive
San Antonio, Texas 78212
Parcel ID: 6938 Lot: 1 & 2

Dear Mr. Stapleton:

At your request, Paul-Koehler-Brown Consulting Structural Engineers provided structural engineering site investigation services for the home at 205 Ostrom Drive in San Antonio, Texas. This inspection was performed by Travis Lowe in our office. The purpose of this investigation was to review the condition of the structure and determine if it is feasible to repair or salvage the existing structure.

House Construction

It is our understanding that the house was built in 1935 with additional renovations occurring in 1970. The original foundation is a wooden post (pier) and beam foundation system, and the later addition used a concrete slab on-grade for a patio and sitting room. The original floor system is composed of wood decking over wood beams and joists that are supported on the wooden timber posts. The wooden posts appear to be composed of cedar and many still had some bark attached. The walls are typical wood stud wall framing. The roof was conventional "stick framing" with wood joists and rafters. It could be seen that the shingle roofing system consisted of multiple layers, due to adding additional shingle layers without removing the previous roof before installing the new roof.

Findings

Due to age and apparent lack of maintenance for many years, the house is severely deteriorated. It is our understanding that the house has been abandoned for the past 23 years and the lack of any maintenance or climate control over a long period of time has contributed to the deterioration of the house. Wood decomposition was evident all over the interior and exterior house. Signs of dry rot, fungus, and wood worm or termite infestation could be seen in the wood framing throughout the house. This deterioration is widespread and has reduced the structural integrity of the

wooden members. Section loss could be seen in the wood framing. Floors were collapsed in some areas. Wall sheathing had cracks between sheathing panels and large sections were deteriorated or missing. In addition, parts of the ceiling and roof were collapsed at various locations. Daylight could be seen coming through holes in the roof. Some areas of the roof were sagging from what appeared to be buildup of material on the roof, like tree branches, or from the deterioration of the wooden framing below due to rot, fungus, etc. Most of the house has been subjected to water intrusion due to the deterioration and collapse of portions of the roof. It also appeared that both types of foundations present at the house were adversely affected by shrink/swell movement of the underlying soil. The cracking in the concrete portion of the foundation was caused by expansive clay soils, where the soil becomes saturated and expands, then subsequently dries out and shrinks with seasonal moisture changes. The movement caused by the expansive soil conditions is also evident in the wood portion of the foundation, demonstrated by various wooden piers that extend at an angle from the ground as well as cracking and separation in the concrete foundation. Also, floor beams were found to be shifted away from their wooden pier foundation supports. The movement in the foundation also caused cracks in the wall framing and sheathing. There are many deficiencies in the structural integrity of the foundations, walls, and roof elements.

Based on the on-site observations and our structural experience, it is our opinion that the existing house structure is unsafe for habitation, the structural members are too badly deteriorated to be repaired, and the entire structure should be completely demolished. If you have any questions, please contact me.

Respectfully Submitted,

5/31/17

STATE OF TEXAS
DAVID OWEN BROWN
45598
LICENSED
PROFESSIONAL ENGINEER

David O. Brown, P.E.
Principal
PAUL-KOEHLER-BROWN
Texas Firm Reg. No. F-11103
512-231-8910
dbrown@pkbrown.com

Attachments: Photos

CALVETTI + ASSOCIATES
professional engineers

August 16, 2017

River Road HDRC
Office of Historic Preservation
1901 S. Alamo
San Antonio, TX 78204

RE: Residence Structure
205 Ostrom Street
San Antonio, Texas 78211

Director and Commission Members:

INTRODUCTION

On July 13, 2017 I conducted a visual inspection of the exterior of the above referenced structure. I made a report of the limited observations I made of the structures exterior. In the report I stated that an inspection of the interior would be very beneficial in providing a more informed opinion of the structures integrity. That opportunity was granted by the owner Mr. Toby Stapleton and I revisited the structure on August 16, 2017.

For orientation, front of the structure (based on entry door) faces nearly east. It is a single story, wood framed structure. The main structure is U-shaped with one leg on the south, the cross leg on the east and the other leg on the north. The area on the west is covered between the north and south leg. Extending west from the north leg is a garage addition. The U-shaped structure has a wood pier and beam foundation. The entry porch and the infilled west area has a slab-on-grade foundation.

I began my observation at the south exterior wall and worked my way around the perimeter of the structure counterclockwise. I then made observation of the interior.

OBSERVATIONS
EXTERIOR:

South Leg:
The foundation piers were severally rotted and those on the west end leaning to the south. The west half of the exterior wall was bowed outwards between the top and bottom of the wall. While most of the beams over the piers were in

relatively good condition, they are undersized for the span between piers. There is much wood rot at the roof eave and some wall boards.
Cross Leg and Entry:
This portion of the structure is in relatively good condition with very little wood rot except the exposed eaves.

North Leg:
While my earlier exterior observations of this portion of the structure didn't reveal any significant damage, a closer look revealed a severely damaged structure. Piers, beams, exposed wall studs and roof framing were severely jeopardized. Vegetation growing on and over the walls and roof has added in some of the deterioration.

The extension to this leg is in near collapse.

INTERIOR:

The interior of the south leg and cross leg was in relatively good condition. Portions of the ceiling material had been water soaked due to holes in the roof and collapsed. The bow in a portion of the south wall was noted. Most of the roof framing and floor framing were in good condition. However water leaking into a large portion of the north leg's interior has severely compromised the integrity of floor boards, floor and roof framing and wall studs.

DISCUSSION

South Leg:
It could be possible to restore this portion of the structure but with difficulty. The bowed portion of the wall would need to be replaced which means the roof would need to supported while this was done. The entire leg would need to be supported while new piers and beams are installed however the leg is wracked horizontally due to the drift of the west end of the leg when the piers failed and leaned south. To correct this without removing portions of the roof, floor and walls would be very complicated and potentially dangerous.

North Leg:
This leg has so much rotted and damaged framing that the only safe repair would be to demolish and rebuild it. The base of some interior walls are so deteriorated they are more or less hanging from the ceiling. Some appear to be near falling over. I did not feel comfortable venturing very far into its interior.

Cross Leg:
This portion of the structure is reasonably repairable.

The roof on the west side, framed between the north and south legs and the slab beneath, are not salvageable.

Based upon my latest observations of the foundation, the interior and exterior walls, and the roof and floor framing, I believe the only portion of this structure that could be reasonably repaired is the entry and what I've called the cross leg. Therefore, as much as I believe in the restoration of historical structures, I do not believe this structure is a realistic candidate for such repair and restoration.

If you have any comments or questions, please don't hesitate to contact my office.

Lawrence Calvetti, P.E., SECB

STATE OF TEXAS
LAWRENCE CALVETTI
36938
LICENSED
PROFESSIONAL ENGINEER

17 August 2017

STRUCTURAL ASSESSMENT FOR:

SEADC LLC

205 Ostrom Dr.
NCB 6938 BLK LOT 1&2
San Antonio, Texas 78212

MAE PLLC
Report of Findings
STRUCTURAL ASSESSMENT FOR:

205 Ostrom Dr.
NCB 6938 BLK LOT 1&2
San Antonio, Texas 78212

By
MAE PLLC
Mortensen Architectural Engineering PLLC
TBPE Firm # 16119
San Antonio, TX

(210) 801-4330
smorXsen@yahoo.com

MAE PLLC FILE NO: 18-076

REPORT DATE: OCTOBER 29, 2018

PREPARED FOR:

TOBY STAPLETON
Stapleton Build & Design
205 Ostrom
San Antonio 78212
(425) 305-8044

10/29/18

Scott M. Mortensen PE
Principal MAE PLLC

Table of Contents

Introduction....2
Scope of this Report....2
Areas of Concern....3
Discussion of Information Analysis....3
Conclusions and Recommendations....4
Disclaimers....5
Site Photographs....6

Introduction

On October 19, 2018, Mr. Toby Stapleton called upon MAE PLLC to do a structural evaluation at 205 Ostrom Drive, San Antonio, TX 78212. The property's legal information was obtained from the Bexar County Tax Assessor's website.

Scope of this Report

Property Description and Background information

Scott Mortensen, Professional Engineer (PE), met with Toby Stapleton and visited the property on October 22, 2018. After interviewing the contractor, Toby Stapleton, for historical information on the building, Scott Mortensen PE proceeded to inspect the existing building. The property is a single-family; wood-framed, one-story building. The building is pier and beam construction. The front of the structure, for the purposes of this report referenced herein, faces northeast toward East Magnolia Ave. This property was built in 1935. Photographs were obtained during the process and offer a visual of the issues reviewed in the report.

Areas of Concern

Exterior

- Siding:
- Front porch
- Front door

Structural Systems

- Pier System:
  - Sloped floors
- Floor System:
  - Joists
  - Wood flooring
- Wall Framing System:
  - Walls
- Truss System:
  - Roof trusses
- Roof System:
  - Broken ridge beams
  - Eroded and degraded composite roof

Electrical Systems:

- Single phase power without grounding

Plumbing Systems:

- Broken supply pipes

Discussion of Information Analysis

Exterior

- Siding: The exterior siding on this project is not in a straight single plane it has curves in it. The fascia is deteriorated and/or missing.
- Front porch: The porch roof deck has a condition of wet rot and mold. The front fascia is deteriorated and the rafter tails are damaged.
- Front door: The front door has been broken down and is lying on the floor.

Structural Systems

- Pier System: The piers are cedar posts and are not in line. Some posts are missing and some posts do not have the weight of the house bearing upon them.
  - Sloped floors: The elevations taken of the house have a difference of at least 12".
  - Large roots have grown into the foundation system.
- Floor System:

    - Joists: The wood in the joists has the following conditions; termite damage, wet rot, dry rot, covered in mold, and some are missing because they have deteriorated/decomposed.
    - Wood flooring: The wood flooring has the following conditions; termite damage, wet rot, dry rot, covered in mold and large sections are missing because they have deteriorated.
- Wall Framing System:
    - Walls: The wood in walls has the following conditions: termite damage, wet rot, dry rot, covered in mold and deteriorated. The quarter inch drywall is falling off the walls.
- Truss System:
    - Roof trusses: The wood members of the roof trusses have the following conditions: wet rot, dry rot, covered in mold and deteriorated.
    - Rafter tails: Several of the tails are deteriorated/decomposed to the point where the wood does not have the structural integrity to hold the nails for the fascia system.
- Roof System:
    - Broken ridge beams: The ridge beam in several areas has a marked difference in elevation. This is an indication that the ridge beam is broken and nonfunctional.
    - Deck: The roof deck has the following conditions: wet rot, dry rot, covered in mold and deteriorated.
    - Ceiling: The ceiling has the following conditions: the ceiling has delaminated plywood (from being in constant wet conditions), wet rot, and dry rot, covered in mold and deteriorated. The quarter inch sheetrock is falling down.
    - Eroded and degraded composite roof: The composite roof systems are designed to degrade over a period of time. This roof is beyond that time period. This roof has degraded to a condition that the existing roof has lost its ability to shed water.

Electrical Systems:

- Single phase power without grounding: Because of this outdated electrical system, the building cannot have the arc flash and ground fault protection as is required by the city-accepted National Electrical Code (NEC).
- There are different size fuses on the A & B phases of the electrical distribution fuse box.

Plumbing Systems:

- Broken supply pipes: Galvanized water pipes are sheared apart under floor.

Conclusions and Recommendations

MAE concludes that the dry rot (a decaying condition caused by fungi that digest the part of the wood that gives wood its strength and stiffness), wet rot (a decaying condition caused by a different fungi that that digest the part of the wood that gives wood its strength and stiffness), termite damage (a decaying condition caused by an insect that digests the part of the wood that gives wood its strength and stiffness), deteriorated wood, and mold damage. All these conditions affect the structural ability of the wood members to provide the structural integrity required of the buildings structural systems. Any one of these conditions (we are dealing with five different conditions) would affect the ability of the wood in these systems to meet the mathematical values that are required to compute the following structural requirements of: weight bearing capacity, shear stresses, moment stresses, axial stress forces, span lengths of wood members, and nail and bolt pull-out calculations for all of the wood connections. This building has structurally failed. It is only a matter of time that this building will be in catastrophic failure.

MAE concludes that this building in its present condition would fail to meet the required structural values of the city's currently accepted International Residential Code (IRC) requirements specifically,

IRC chapters: (4) Foundation, (5) Floors, (6) Wall Construction, (7) Wall Covering, (8) Roof-Ceiling Construction, (9) Roof Assemblies, (11) Energy Efficiency, and Wind Bracing Requirements.

MAE concludes that the roof has lost its ability to shed water causing a constant wet condition on all the structural members decreasing the structural values and structural integrity of those members.

MAE concludes that deteriorated roof trusses and rafter tails do not have the structural integrity to support a new roof system.

MAE concludes that this building in its present condition would not be able to withstand the structural stresses that would be required to raise the building 12 " to level the floors, the floor joists, the walls, and the roof structure of this building. To prepare this building to withstand the structural stresses required to be raised and level the building is cost prohibitive.

MAE concludes that several ridge beams are broken in several locations reducing the structural integrity of this building. It is unknown if these ridge beams can be fixed.

MAE concludes that this building appears to not have any Architectural Historical Value, and since it is greater than 50% damaged, the rebuilding of this building would be subjected to the current ICC building codes. The rebuilding of this building to current codes is cost prohibitive.

MAE concludes that because of the extensive mold damage of this building it is not fit for human (especially infant) habitation.

MAE concludes that the cost to properly dry, restore and clean the mold in all of this building as per ANSI/IIC RC 500 is cost prohibitive.

MAE concludes that this building does not have the structural integrity to be repaired to its original condition and should be condemned and demolished.

Disclaimers

- This investigation addressed specific conditions relevant to the reported damage at the subject property, and as such, its scope may not be adequate for other purposes. Use of this report or the findings, conclusions, or recommendations presented herein for any other purpose is at the sole risk of the user.

- MAE PLLC has no direct knowledge of concealed conditions. Comments regarding concealed conditions are professional opinions, derived in accordance with current standards of professional practice.

- Recommendations to repair or not to repair the damage of this building have been developed with the objective of restoring the safety and serviceability of this building. There may be other deficiencies present, and this report does not address those.

- Implementation of the repairs recommended herein may require additional architectural or engineering considerations, or both, development of design drawings and specifications, and compliance with local building codes.

- A detailed inventory of all cosmetic damage was beyond the scope of MAE PLLC's investigation. The cosmetic damage described in this report is not intended to be comprehensive, but rather representative of observed conditions.

- The findings herein are made to a reasonable degree of engineering certainty based on information available as of the date of this report. If additional information becomes available, MAE PLLC reserves the right to supplement or modify this report.

- This report is copyrighted by MAE, 2018

Site Photographs

Photo 1 Wet Rot and Mold on Roof Deck

Photo 2 Ceiling Plywood is delaminating and is infested with Wet Rot, Sheetrock is falling

Photo 3 Water damage and Mold on Floors

Photo 4 Wood Floor and Wood Floor Joist Deteriorated and/or Missing

Photo 5 Floor and Floor Joists Fallen Away from the Exterior Wall Floor Base

Photo 6 Roof Patch Trusses Infected by Wet Rot and Mold

Photo 7 Root Intrusion in the Foundation System

Photo 8 Ridge Beam Broken, Fascia Deteriorated, Composite Roof Deteriorated

Photo 9 Wood Flooring Damaged by Intruder arrested by SAPD

Photo 10 Non Grounded Electrical Receptacle in Bedroom

Photo 11 Sheared Steel Water Pipes

Photo 12 Common Ground and Neutral in Fuse Box. Different Size Fuses on Each Circuit

Photo 13 Example of Dry Rot Wet Rot and Mold

Photo 14 Example of Damaged Roof & Ceiling Framing

Photo 15 Example of Extensive Termite Damage

Photo 16 Example of Broken Roof Ridge, Degraded Composite Roof and Deteriorated Rafter Tails

205 Ostrom Drive
Double Driveways within 100ft
Dewberry
Dewberry
Lindell Pl
Google

HDRC Identified a loss of significance and should have approved demolition

- **HDRC Staff Recommendation Nov 1st Action Letter**

If the HDRC finds that a loss of significance has occurred or finds that the criteria for establishing an unreasonable economic hardship have been met, then staff makes the following recommendations regarding the requested new construction: Staff recommends conceptual approval of items #2, #3, #4, #5, the construction with stipulations. (stipulations that we agree to)

Loss of significance has occurred and was documented by HDRC:

It is shown in the Action letter page 1 and documented twice through on site notes.

- Findings General Findings item b. DESIGN REVIEW COMMITTEE ▪ A second site visit was conducted by the DRC on June, 28, 2017. At that site visit, committee members viewed the structure and commented on its structural condition. **Committee members noted at that time that there was a loss of architectural and structural significance.**

Timeline Of Events

- November 2016 Meeting with Community Board to discuss plans - **Positive feedback received that we are engaging community**
- January 16th Meeting with Community Historic Board to review designs **Letter Issued by Community supporting demo**
- February 21,2017 Design Review **Concerns from DRC on design**
- March 22,2017 Design Review Subcommittee (Site Visit) **HDRC Chair comments "this solution for new construction on the site is an appropriate solution"**
- April 25,2017 Design Review Subcommittee **New local River Road Architect is Retained to Aid in design concerns**
- May 10th 2017 Meeting with Community Historic Board to review designs **Letter Issued by Community supporting demo**
- May 17th 1:24am Community Historic Board Text that they can't support as it may affect a pending lawsuit on Lindell
- May 17,2017 1st HDRC Hearing–Withdrawn by Applicant at Hearing **HDRC Recommend withdrawal to hire Structural Engineer**
- June 28,2017 Design Review Subcommittee (Site Visit) **Committee members noted at that time that there was a loss of architectural and structural significance**
- July 25,2017 Design Review Subcommittee **Concerns from DRC on design**
- August 2, 2017 2nd HDRC Hearing Withdrawn by Applicant at Hearing **HDRC Recommend withdrawal to obtain 2nd Structural Engineer Report. This strengthened the first Structural Engineer report clarifying.**
- September 12,2017 Design Review Subcommittee **Concerns from DRC on design**
- September 20,2017 3rd HDRC Hearing–Withdrawn by Applicant at Hearing **Verification asked on potential Salvage/Recycle, Chair agreed that there is a case of uneconomic hardship.**
- October 25,2017 Design Review Subcommittee **Final sit down to agree on all the stipulations with the HDRC**
- November 1,2017 4th HDRC Hearing–Recommendation for Denial. Staff recommends conceptual approval if HDRC Board find that A. that there was a loss of significance **or** B. Economic hardship which the chair said that there was on Sept 20th

Supporting Demolition Overview

- **Engaged Neighborhood at multiple board meetings MOST RECENTLY OCT 2018 SHOWING THESE DRAWINGS.**

- **Engaged the local Neighborhood Historic Committee & Neighborhood association.**
  - **Received two letters of support of demolition from Neighborhood over 7 Months.**
- HDRC Board Identified that the house has undergone significant and irreversible changes , not caused by the owner. Establishing a Loss of Significance.
- **Received 3 Structural Engineers Reports condemning the building.**
- Received 3 Builders Letters stating that they can not renovate the building.
- **Received 2 Real Estate letters, declining to list on MLS, stating that the listing would be nearly impossible to sell based on HDRC Demolition Decline & Structural Letters on public record condemning the building.**
- **Chair comments in board meeting that there is a case of Uneconomic Hardship**
- **Board Members at Site Visit Agree in writing that there is a Loss of Significance**

Structural Engineer's (2) Findings Support Demolition

- Per a request by the HDRC a **Structural Engineer (Paul Koehler Brown)** was retained and the report was issued, stating "the entire structure should be completely demolished" As well as a long list of issues and serious concerns.
- A neighbor hired another Structural Engineer **(Calvetti and Associates)** to do an exterior observation (Verbal only) from the road that was inconclusive
- To alleviate the neighbors' & HDRC concerns as requested by HDRC Staff & HDRC Committee, I engaged (no fee) Mr. Calvetti and allowed him access to the property, please see his report below and here are some highlights : "I did not feel comfortable venturing very far into its interior" "not Salvageable" "a closer look revealed a severely damaged structure" " near collapse" "Severely compromised" "Piers, beams, exposed walls studs and roof framing were severely jeopardized" "I do not believe this structure is a realistic candidate for such repair and restoration"
- Mr. Calvetti attended the HDRC committee meeting and Spoke to encourage demolition again for no fee. A THIRD ENGINEER WAS HIRED SEE ATTACHED REPORT from Scott Mortensen PE

HDRC Findings on Structural Reports that Support Demolition

- HDRC Opinion based on reviewing both Structural Engineers Reports
  - "The HDRC finds that Neither Report Recommends Repair"

Based on the on-site observations and our structural experience, it is our opinion that the existing house structure is unsafe for habitation, the structural members are too badly deteriorated to be repaired, and the entire structure should be completely demolished. If you have any questions, please contact me.

Respectfully Submitted,

5/31/17

David O. Brown, P.E.
Principal
PAUL-KOEHLER-BROWN
Texas Firm Reg. No. F-11103
512-231-8910
dbrown@pkbrown.com

STATE OF TEXAS
DAVID OWEN BROWN
45598
LICENSED
PROFESSIONAL ENGINEER

10/29/18

Scott M. Mortensen PE
Principal MAE PLLC

MAE concludes that this building does not have the structural integrity to be repaired to its original condition and should be condemned and demolished.

CALVETTI + ASSOCIATES
professional engineers

River Road HDRC
205 Ostrom Street

August 17, 2017
Page 3

Therefore, as much as I believe in the restoration of historical structures, I do not believe this structure is a realistic candidate for such repair and restoration.

If you have any comments or questions please don't hesitate to contact my office.

Lawrence Calvetti, P.E., SECB

STATE OF TEXAS
LAWRENCE CALVETTI
36938
LICENSED
PROFESSIONAL ENGINEER

Life Safety Concern:
3 Licensed Professional Structural Engineers Recommend Demolition

HDRC Request Builders to provide pricing. All 3 Support Demolition

- HDRC Requested Letters from Builders and Pricing to Renovate

David Pruske
9232 Larsons Lane, Helotes, TX 78023
210-288-6089 dpruske@att.net

8/28/17

Toby & Mai Stapleton
205 Ostrom Drive, San Antonio TX 78212

Dear Toby & Mai Stapleton,

Thank you for the opportunity to bid on your renovation project at 205 Ostrom Drive, San Antonio, 78212. I have been renovating, building homes and commercial businesses for over 40 years in San Antonio and the surrounding areas and I am always up for a challenge.

I must say this is a challenge that I must decline, when I walked the property the other day I witnessed roof sagging, bowed walls and severe rot and fungus. If you or another builder attempt to jack up this house it will in my experience fall. Please note I am not a structural engineer just a construction and safety professional with years of experience, I would advise you to obtain the services of a structural engineer immediately if you are thinking about renovation, something I urge you not to do.

I am glad to offer you pricing on a new dwelling in its place, please contact me when you have approved drawings and I will be glad to give you a competitive price.

Sincerely,

Declined to Renovate
In his Experience 40 years
"This house will fall if you try and jack it up" Insisted on us engaging a structural engineer immediately

HILL COUNTRY LIFESTYLE CUSTOM HOMES HOMES

FFLANTE@SATX.RR.COM

210-240-3103

26611 DANCING BEAR
SAN ANTONIO TX 78260

TOBY & MAI
205 OSTROM DRIVE
SAN ANTONIO TX 78212

Dear Toby & Mai, 8/20/17

Thank you for forwarding over the 2nd structural engineer's report, as I suspected he agrees with the first structural engineer, myself and the architect that this building has gone past the point of rehabilitation and should be demolished.

Please understand that we originally decided to take this project on as a lump sum and did not expect to produce multiple cost estimates for fictitious scenarios to do some sort of comparison between the new completely different house styles and refurbishment of a structurally condemned building. I question the logic of something that we will not perform or would never put you in a position to be told to do so by COSA/HDRC.

I am now bound by the duty of care of you and others insisting that you do not enter this dwelling. I am by way of this letter retracting all prior pricing relating to this project until a confirmed approved design is in place.

I am sorry if this puts you in an awkward position, but this is the right thing to do at this juncture.

Sincerely, Paul Flante
Hill Country Lifestyle Custom Homes

Declined to Renovate
"past the point of rehabilitation should be demolished "Bound by the duty of care of you and others insisting that you do not enter this dwelling"

GR VALADEZ CONSTRUCTION

2510 Danbury San Antonio, TX 78217 | 210.316.8741 | grvaladez1@att.net

9/14/2017

Toby & Mai Stapleton

205 Ostrom Drive

San Antonio, TX 78212

Mr. & Mrs. Stapleton,

Thank you for contacting our company with your construction needs. After viewing the structure at the above location and viewing the engineers reports you provided our company. I agree with the engineer's report that the structure has fallen into a total state of disrepair. In my professional opinion the existing structure should be demolished and a new home built in it's place. In closing our company is not willing to provide you an estimate to do any work beyond completely demolishing the existing structure. Our company would look forward to working with you on the construction of the new home. Please feel free to contact me if you have any questions or concerns regarding this matter.

Sincerely,

Galen Valadez

Declined to Renovate
Willing to give demolition pricing only. "Structure has fallen into a total state of disrepair"

Realtors Support Demolition, Decline Listing - Unmarketable

Zars & Rogers REALTORS®

10/10/2017

Regarding the property located at 205 Ostrom in San Antonio, TX 78212 (NCB 6938) Lots 1&2), we do not feel that it is a listing we would take on for several reasons.

In its current state & having been abandoned for 23 years, it is not safe or livable. Plus, two structural engineers have also deemed it to be unlivable.

Also, with the structure on the property not being allowed to be shown & with it not being able to be torn down, we do not feel it is marketable at this time.

If you have any questions, please call Patricia Zars at (210)771-5263.

Broker/Owner
Zars & Rogers REALTORS

Decline to List, Viewed Structural letters online at HDRC , House is Unmarketable.

EP EXQUISITE PROPERTIES, LLC

13526 George Rd, Suite 106
San Antonio, Tx 78230
(210) 494-1695 Office | (210) 497-4803 Fax

To: **Board of Adjustments** December 15, 2017

RE: **205 Ostrom**

Dear Board of Adjustments:

I am a licensed real estate broker on Texas with over 15 years of experience and I represented Mr. Stapleton when he purchased the property at 205 Ostrom.

At that time, the seller would not allow access to the interior of the property because of the dangerous condition of the structure and represented that the property was not safe. The value paid for the property was based, in our opinion, on the value of the land alone.

During the time of Mr. Stapleton's ownership the dangerous condition of the structure has been confirmed by contractors and engineers. If I were to list the property for sale I would assign the structure no value, I would restrict prospective purchasers from entering the property due to safety concerns, and I would value the property at the value of the land only.

I support Mr. Stapleton's petition to demolish the structure because it is unsafe, it is an attractive nuisance, and it is a blight on an otherwise beautiful historic neighborhood.

Sincerely,

Micah Harper, Attorney/Broker
Exquisite Properties, LLC

Restricted Prospective Purchasers, Supports Demolition, noted unsafe for viewing

OHP Archaeology have no objections to demolition

Archaeology Plan

In talks with Matthew Elverson of the OHP Archaeological dept. as well as forwarding the stipulation by HDRC, he has requested that my plan be limited to informing him 48hrs in advance of deep trench excavation on site.

He does not see that demolition is a concern but new trenching would need to be looked at.

Contact: Matthew.elverson@sanantonio.gov

By way of the conversation with Matthew Elverson the HDRC should note that we have fulfilled the plan and will act on it as shown above.

- HDRC Ask: ARCHAEOLOGY- Archaeological investigations may be required. The archaeological scope of work should be submitted to the OHP archaeologists for review and approval prior to beginning the archaeological investigation. The development project shall comply with all federal, state, and local laws, rules, and regulations regarding archaeology.

Pictures Supporting Demolition

Respectfully Submitted,

5/31/17

David O. Brown, P.E.
Principal
PAUL-KOEHLER-BROWN
Texas Firm Reg. No. F-11103
512-231-8910
dbrown@pkbrown.com

STATE OF TEXAS
DAVID OWEN BROWN
45598
LICENSED
PROFESSIONAL ENGINEER

Pictures Supporting Demolition

Pictures Supporting Demolition

Pictures Supporting Demolition

Infestation for Roof's

Pictures Supporting Demolition

Pictures Supporting Demolition

Pictures Supporting Demolition

Pictures Supporting Demolition

Supporting Demolition

- **Engaged Neighborhood at multiple board meetings. OCT 2018 LAST ENGAGEMENT**
- Hired a local Architect that lives in the neighborhood, to generate a sympathetic design to replace abandoned (23yrs) building.
- **Engaged the local neighborhood historic committee**
  - **Received two letters of support of demolition from neighborhood committee**
- Identified that the house has undergone significant and irreversible changes , not caused by the owner. Establishing a Loss of Significance
- **Received 3 Structural Engineers Reports condemning the building**
- Received 3 Builders Letters stating that they can not renovate the building
- **Received 3 Real Estate letters, 1 clearly stating they could not list on MLS, 2 stating that the listing would be nearly impossible to sell at a profit based on HDRC Demolition Decline & Structural Letters on public record condemning the building.**

Structural Engineer's (2) Findings Support Demolition

- Per a request by the HDRC a **Structural Engineer (Paul Koehler Brown)** was retained and the report was issued, stating "the entire structure should be completely demolished"
- A neighbor hired another Structural Engineer **(Calvetti and Associates)** to do an exterior observation from the road that was inconclusive
- To alleviate the neighbors' & HDRC concerns as requested by Edward Hall & HDRC Committee, I engaged (no fee) Mr. Calvetti and allowed him access to the interior, please see his report below and here are some highlights : "I did not feel comfortable venturing very far into its interior" "not Salvageable" "a closer look revealed a severely damaged structure" " near collapse" "Severely compromised" "Piers, beams, exposed walls studs and roof framing were severely jeopardized" "I do not believe this structure is a realistic candidate for such repair and restoration"
- Mr. Calvetti attended the HDRC committee meeting and Spoke to encourage demolition again for no fee.
  A THIRD ENGINEER ENGAGED SEE REPORT ATTACHED (SAME RESULT)

HDRC Findings on Structural Reports that Support Demolition

- HDRC Opinion based on reviewing both Structural Engineers Reports
  - "The HDRC finds that Neither Report Recommends Repair"

Based on the on-site observations and our structural experience, it is our opinion that the existing house structure is unsafe for habitation, the structural members are too badly deteriorated to be repaired, and the entire structure should be completely demolished. If you have any questions, please contact me.

Respectfully Submitted,

5/31/17

David O. Brown, P.E.
Principal
PAUL-KOEHLER-BROWN
Texas Firm Reg. No. F-11103
512-231-8910
dbrown@pkbrown.com

STATE OF TEXAS
DAVID OWEN BROWN
45598
LICENSED
PROFESSIONAL ENGINEER

10/24/18

STATE OF TEXAS
SCOTT M. MORTENSEN
104102
LICENSED
PROFESSIONAL ENGINEER

Scott M. Mortensen PE
Principal MAE PLLC

MAE concludes that this building does not have the structural integrity to be repaired to its original condition and should be condemned and demolished.

CALVETTI + ASSOCIATES
professional engineers

River Road HDRC
205 Ostrom Street

August 17, 2017
Page 3

Therefore, as much as I believe in the restoration of historical structures, I do not believe this structure is a realistic candidate for such repair and restoration.

If you have any comments or questions, please don't hesitate to contact my office.

Lawrence Calvetti, P.E., SECB

STATE OF TEXAS
LAWRENCE CALVETTI
36938
LICENSED
PROFESSIONAL ENGINEER

HDRC Findings from Site Visit Support Structural Engineers

- Site visit by HDRC Board members, **Opinion is Loss of Significance**

DL: APPEARANCE IS CONSISTENT WITH THE ENGINEER'S REPORT; OPINION IS OF LOSS OF SIGNIFICANCE. EL: LOSS OF STRUCTURAL INTEGRITY. JG: COMPLETE LOSS OF STRUCTURAL INTEGRITY - MATERIALS COULD BE SALVAGED. EL + JG: SAFETY HAZARD AS THE STRUCTURE.

COMMITTEE RECOMMENDATION: **APPROVE [ ] DISAPPROVE [ ]**
APPROVE WITH COMMENTS/STIPULATIONS:

Committee Chair Signature (or representative) Date

HDRC Findings from Site Visit Supportive of Demolition

- Site visit by HDRC Board members

EK: STABILITY OF THE WOOD IS QUESTIONABLE - PROBABLE LOSS OF ALL STRUCTURAL INTEGRITY; VERY LITTLE OF THE STRUCTURE IS SALVAGEABLE.

AMG: SOME WALLS HAVE OBVIOUS STRUCTURAL ISSUES.

AK: WOULD LIKE TO SEE REPORTS ON STRUCTURAL INTEGRITY OF FOUNDATION.

EG: THE CONDITIONS OF THE ROOF STRUCTURE IS CONCERNING.

EG + JG: SUPPORTIVE OF DEMOLITION - SALVAGE PLAN IS NECESSARY; WINDOWS AND SIDING. FUNGUS IS A MAJOR PROBLEM WITH STRUCTURE.

HDRC Findings from Committee Chair Site Visit

- Site visit by HDRC Chair
- Approval for Conceptual demolition/design
- The record does not clearly reflect the neighborhood members that are in support of demolition

COMMENTS/CONCERNS: MG: QUESTIONS REGARDING APPEARANCE OF EACH STRUCTURE - WILL THEY APPEAR AS SINGLE-FAMILY? (YES) - PER JL. MG: WHAT MATERIALS ARE BEING CONSIDERED? JL: WOOD SIDING, BOARD AND BATTEN SIDING. MG: ASSUMING THAT THE PROPOSED DEMOLITION IS APPROPRIATE, THIS SOLUTION FOR NEW CONSTRUCTION ON THE SITE IS AN APPROPRIATE SOLUTION. THE SCALE IS APPROPRIATE. ANY CONCERNS WOULD BE REGARDING THE EXISTING HISTORIC STRUCTURE AND ANY CONTRIBUTING CHARACTERISTICS.

COMMITTEE RECOMMENDATION: **APPROVE [✓] DISAPPROVE [ ]**
APPROVE WITH COMMENTS/STIPULATIONS:

APPROVAL FOR CONCEPTUAL

Committee Chair Signature (or representative)

4/25/17
Date

205 Ostrom Drive
Photo from Dewberry and Magnolia Intersection

205 Ostrom Drive Updated
Pics of cleared brush from house

205 Ostrom Drive
Photo from Magnolia &
Lindell Intersection

205 Ostrom Drive
Photo from Ostrom &
Dewberry Intersection

205 Ostrom Drive
Interior Photo’s
23 Years Abandoned

205 Ostrom Drive
Interior Photo’s
23 Years Abandoned

ReCycle

5690 Easterling #4, San Antonio, Texas 78251 REF: 205 Ostrom Drive, SA TX 78212

Mr. Mulhern,

Upon our previous inspection of the building it is in our opinion that approximately 70-80% the flooring, window frames and other wood materials appear to be rotted or infested. The structural engineers' reports clearly confirm my opinion that this building is rotten inside and out. When houses experience this many years of neglect, the wooden materials are subject to great scrutiny. When infested, they require tremendous chemical treatment to ensure we are not potentially contaminating another site. More important in this case is our inability to remove the materials as the rot destroys the materials during removal process, prior to even going on the trucks. What we can suggest upon review once the building is opened/demolished is the following, relating to somewhat solid wood that will be separated by your demo contractor.

Lumber and Other Wood Scraps:

Ground into wood chips and mulch that can be used for:

- Landscape mulch
- Tree root zone protection
- Erosion control
- Walk paths
- Soil amendment

Plumbing fixtures and copper (though there looks to have at quite a bit removed or stolen) will be assessed for standard recycling procedures. Any fixtures found to be unique and or antique will be made available to sources for restoration in areas of historical value such as the Monta Visa area.

By our count we saw there are 20 wooden windows some hidden behind those "industrial looking shutters". Windows and associated hardware (weights, pulleys, etc) will be assessed for historical value. Again, those items will be made available to sources catering to historical preservation. Along with the metal shutters and other

miscellaneous metals, nails are automatically separated from scrap wood during grinding. We will collect the separated nails and other discarded metals and deliver them to a metal recycler(s) for fair market value.

The roof looks like multiple layers placed on top of each other. With the wood rot and hence the sagging, we can suggest the following.

Roofing Tiles and Asphalt Roofing Shingles:

Ground and used as:

- Aggregate
- Fill

I am fully prepared to go over any questions about the above plan proposals. I hope the committee reviews the proposed salvage/recycle plan and see's that we can be a service to the community as well as the environment. As the previous owner paid the non-refundable retainer I have as discussed agreed to transfer this over to SEADC, I will not be charging you for any future committee meeting attendance. I can certainly appreciate your dedication to this project and personally appreciate your commitment to recycle and salvage of all parts materials.

I'm not familiar with any HDRC recycle plan(s) on structures. Therefore can not elaborate on their concerns or what they wanted to see. Recycling, while a fantastic concept, cannot be realized on all materials. However, we will help you through this process!

Thank you for the retaining our services and we hope this is enough information for the amount of recycling we can do. We will obviously have a much better grasp of quantities and quality as we begin the process.

Sincerely,

John Cammack, President/Owner

River Road Neighborhood Association

To: HDRC Baord Members, May 11, 2017

The Historic Resources Committee of the RRNA has reviewed the proposed plans for new construction at 205 Ostrom in the River Road Neighborhood, and agreed that the project was appropriate for the nighborhood and would be a great improvement over the existing abandoned house at that address. We urge the HDRC Board to give this project conceptual approval.

Sincerely,

Darla Piner
Chairman
Historic Resurces Committee
River Road Neighborhood Association

River Road Historic Committee

William Sibley, Darla Piner, Co-Chairs

535 E. Craig Pl, San Antonio, TX 78212

Sibley: 210-323-2968, Piner: 210-738-9256

wjsibley@aol.com

epinertex@gmail.com

01/17/2017

To the San Antonio HDRC Board,

Re: 205 Ostrom Drive

Having reviewed the plans presented to us by Tobias and Mai Stapleton, for their property located at 205 Ostrom Drive, we find them fitting and acceptable.

We agreed with their plans for demolition of the existing structures.

Sincerely,

W. Sibley, D. Piner; Co-Chairs

RIVER ROAD HISTORIC COMMITTEE

PAUL • KOEHLER • BROWN
consulting structural engineers, llc

[redacted]

M[redacted]

Mr[redacted]
[redacted]
S[redacted]

RE[redacted]

D[redacted] Mr[redacted]

A[redacted] The roof was conventional “stick framing” [redacted]

[redacted]

wooden members. Section loss could be seen in the wood framing. Floors were collapsed in some areas. Wall sheathing had cracks between sheathing panels and large sections were deteriorated or missing. In addition, parts of the ceiling and roof were collapsed at various locations. Daylight could be seen coming through holes in the roof. Some areas of the roof were sagging from what appeared to be buildup of material on the roof, like tree branches, or from the deterioration of the wooden framing below due to rot, fungus, etc. Most of the house has been subjected to water intrusion due to the deterioration and collapse of portions of the roof. It also appeared that both types of foundations present at the house were adversely affected by shrink/swell movement of the underlying soil. The cracking in the concrete portion of the foundation was caused by expansive clay soils, where the soil becomes saturated and expands, then subsequently dries out and shrinks with seasonal moisture changes. The movement caused by the expansive soil conditions is also evident in the wood portion of the foundation, demonstrated by various wooden piers that extend at an angle from the ground as well as cracking and separation in the concrete foundation. Also, floor beams were found to be shifted away from their wooden pier foundation supports. The movement in the foundation also caused cracks in the wall framing and sheathing. There are many deficiencies in the structural integrity of the foundations, walls, and roof elements.

Based on the on-site observations and our structural experience, it is our opinion that the existing house structure is unsafe for habitation, the structural members are too badly deteriorated to be repaired, and the entire structure should be completely demolished. If you have any questions, please contact me.

Respectfully Submitted,

5/31/17

STATE OF TEXAS
DAVID OWEN BROWN
45598
LICENSED
PROFESSIONAL ENGINEER

David O. Brown, P.E.
Principal
PAUL-KOEHLER-BROWN
Texas Firm Reg. No. F-11103
512-231-8910
dbrown@pkbrown.com

Attachments: Photos

□□□□□ □□□□ □□d□□ □□□□□ □□□□□ □□S□□□□□□ □□d □□□r□□□ Ar□□

□□□□□ □□C□□□r□□□ S□□□ □□□□d□□□□□ Cr□□□□□□□ □□d M□□□□□ □□□□

□□□□□ □□□□□□□□□□ □□d □□□□r□□□ D□□□r□□r□□□□□

□□□□□ □□□□ □□□S□□□□□□ □ □□□ M□□□□□□□ S□□□□ □□□□□□□□□ □□□□□□□□□□□

□□□□ □□Cr□□□□□ □□ □ □□S□□□□□□□

□□□□ □□Cr□□□□□ □□ C□□□□ S□□□□□□□

□□□□□ □□C□□□□□□□d S□□□□□□ □□□□ □□d□□ R□□□□□□□□□□ □□d □□□□ □

□□□□□ □□□Signs of Fungus Infestation for Roof's Wooden Framing

E□d □□□□□□□□

Proof of lost of significance

CITY OF SAN ANTONIO
OFFICE OF HISTORIC PRESERVATION

HISTORIC AND DESIGN REVIEW COMMISSION
COMMISSION ACTION
This is not a Certificate of Appropriateness and cannot be used to acquire permits

November 1, 2017

HDRC CASE NO: **2017-478**

ADDRESS: 205 OSTROM

LEGAL DESCRIPTION: NCB 6938 BLK LOT 1&2

HISTORIC DISTRICT: River Road

APPLICANT: Tobias Stapleton - 1915 Broadway

OWNER: Tobias Stapleton - 1915 Broadway

LAST YEARS LETTER NOT THIS SESSION

REQUEST:

The applicant is requesting conceptual approval to:
1. Demolish the historic structure located at 205 Ostrom.
2. Construct a two story, primary residential structure on the east end of the lot.
3. Construct a two story, primary residential structure on the west end of the lot.
4. Construct two, two story, rear accessory structures at the rear of each two story structure.
5. Install two driveways/parking locations on the site.

As an alternative to the above-listed request, the applicant is requesting conceptual approval to:
6. Construct a two story accessory structure at the rear of the existing, historic structure.

FINDINGS:

General findings:
a. DESIGN REVIEW COMMITTEE – This request was originally reviewed by the Design Review Committee on February 21, 2017. At that meeting, committee members commented on the proposed architecture and noted concerns regarding the proposed massing and turrets. A site visit was conducted with HDRC Commissioners, members of the River Road Neighborhood Association, neighbors and Office of Historic Preservation Staff on March 22, 2017. At that site visit, access was provided to both the exterior of the structure as well as the interior. This request was reviewed again by the Design Review Committee on April 25, 2017. At that time, a new design was presented to the committee and received positive feedback.
b. DESIGN REVIEW COMMITTEE – A second site visit was conducted by the DRC on June, 28, 2017. At that site visit, committee members viewed the structure and commented on its structural condition. Committee members noted at that time that there was a loss of architectural and structural significance. This request was reviewed by the DRC on July 25, 2017. At that meeting, committee members noted concern over the proposed setbacks in relationship to others found within the River Road Historic District and noted that the proposed flat roof of the second primary structure is not appropriate for the district.
c. This request was heard at the August 2, 2017, Historic and Design Review Commission hearing where the application was withdrawn by the applicant. This request was reviewed by the Design Review Committee on September 12, 2017, where the applicant noted a change in the proposed roof form of one of the primary structures and provided additional information regarding structural analyses by structural engineers. This request was heard by the HDRC At the September 20, 2017, hearing where it was withdrawn by the applicant. This request was reviewed by the Design Review Committee on October 25, 2017, where the committee noted that accurate survey information was needed, that diagrams noting changes and improvements since previous reviews should be included in the presentation documents, that the proposed single width garage doors were not appropriate and that the proposed two story accessory structure at the rear of the single story historic structure overpowered the historic structure.

Last Year for Info Only
THIS IS INCORRECT SEE THE DEMO SUPPORT LETTERS ISSUED
d. The River Road Historic District has been intensely opposed to the demolition of structures located within the district. The criteria outlined for the demolition of a contributing structure noted in UDC Section 35-618 is important to the public process.
e. ARCHAEOLOGY – The project area is within the River Improvement Overlay District and the River Road Local Historic District. A review of historic archival maps shows the Upper Labor Acequia crossing the property. Therefore, Archaeological investigations may be required.

Findings related to request item #1:
1a. The structure located at 205 Ostrom was constructed circa 1935 and is located within the River Road Historic District. The structure features architectural elements that are indicative of the Minimal Traditional Style that can be found in the district. The house features many of its original materials including wood siding and wood windows. However, modifications to the form of the historic structure have resulted in the removal and enclosing of the front porch, which now presents itself as a screened porch. Despite these modifications, staff finds the house to be a contributing resource within the River Road Historic District due to its construction date and architectural style.
1b. The loss of a contributing structure is an irreplaceable loss to the quality and character of San Antonio. Demolition of any contributing buildings should only occur after every attempt has been made, within reason, to successfully reuse the structure. Clear and convincing evidence supporting an unreasonable economic hardship on the applicant if the application for a certificate is disapproved must be presented by the applicant in order for demolition to be considered. The criteria for establishing unreasonable economic hardship are listed in UDC Section 35-614 (b)(3). The applicant must prove by a preponderance of the evidence that:A. The owner cannot make reasonable beneficial use of or realize a reasonable rate of return on a structure or site, regardless of whether that return represents the most profitable return possible, unless the highly significant
endangered, historic and cultural landmark, historic and cultural landmarks district or demolition delay designation, as applicable, is removed or the proposed demolition or relocation is allowed; [The applicant has provided detailed cost estimate for rehabilitation of the structure which is approximately $589,242. This bid was provided by a contractor who was approved by the applicant's financing provider. The applicant has noted that the rehabilitation or new construction at this site is limited to a contractor that is
recommended and approved by their financial provider. The applicant has noted that financing for the proposed rehabilitation and new construction has been limited due to the current condition of the structure. Staff finds that an alternative opinion by a third-party contractor may result in a lower estimate for repairs. The applicant has not submitted additional bids at this time.
B. The structure and property cannot be reasonably adapted for any other feasible use, whether by the current owner or by a purchaser, which would result in a reasonable rate of return;
[The applicant has provided information in the form of a structural report from the selected contractor which notes that the structure is suffering from intense dry rot that has impacted the structure to the extent that certain beam joists and studs have been structurally compromised. Additionally, the structural analysis provided by the contractor notes the collapse of the floor in certain areas, the collapse of ceiling and the roof structure, infestation of wood worm and the presence of fungus throughout the structure. In addition to the report provided by the selected contractor, the applicant has provided structural analyses from two structural engineers. Neither report recommends repairs.]
C. The owner has failed to find a purchaser or tenant for the property during the previous two (2) years, despite having made substantial ongoing efforts during that period to do so. The evidence of unreasonable economic hardship introduced by the owner may, where applicable, include proof that the owner's affirmative obligations to maintain the structure or property make it impossible for the owner to realize a reasonable rate of return on the structure or property. [The applicant has not provided staff with information noting the active marketing of this property to potential purchasers. The applicant has noted that the structure has been vacant for approximately twenty-three years. The
applicant has owned this property for approximately one year. The UDC Section 35-614 lists the criteria for establishing an unreasonable economic hardship in the context of long-term ownership of a property, not the purchase of a property with the intent to demolish the existing, historic structure.
1c. The applicant has provided additional information in the packet that summarizes financial losses should demolition not be approved. However, these losses are related to the acquisition of the property by the applicant and not the criteria established by the UDC. Staff finds that the applicant has not demonstrated an unreasonable economic hardship in accordance with the UDC. When an applicant fails to prove unreasonable economic hardship, the applicant may provide to the historic and design review commission additional information which
may show a loss of significance in regards to the subject of the application in order to receive historic and design review commission recommendation of approval of the demolition. If, bas ed on the evidence presented, the historic and design review commission finds that the structure or property is no longer historically, culturally, architecturally or archeologically significant, it may make a recommendation for approval of the demolition. In

making this determination, the historic and design review commission must find that the owner has provided sufficient evidence to support a finding by the commission that the structure or property has undergone significant and irreversible changes which have caused it to lose the historic, cultural, architectural or archeological significance, qualities or features which qualified the structure or property for such designation. Additionally, the historic and design review commission must find that such changes were not caused either directly or indirectly by the owner, and were not due to intentional or negligent destruction or a lack of maintenance rising to the level of a demolition by neglect.

1d. In general, staff encourages the rehabilitation, and when necessary, reconstruction of historic structures. Such work is eligible for local tax incentives. The financial benefit of the incentives should be taken into account when weighing the costs of rehabilitation against the costs of demolition with new construction.

Findings related to request item #2:

2a. SETBACKS & ORIENTATION – According to the Guidelines for New Construction, the front facades of new buildings are to align with front facades of adjacent buildings where a consistent setback has been established along the street frontage. Additionally, the orientation of new construction should be consistent with the historic example found on the block. The applicant has proposed an orientation that is consistent with the historic examples found throughout the district. Regarding setbacks, this lot features an irregular shape, presenting itself as an island. The applicant has proposed a setback that is similar to setbacks found along a typical street in the front, while side setbacks and close to side streets.

2b. SETBACKS & ORIENTATION – While the site plan provided is sufficient for conceptual review of design elements, concern has been expressed regarding the accurateness of the survey provided for the property and actual property lines may differ from those represented in the submitted site plan. Any final plans must represent accurate setback conditions and demonstrate compliance with the Unified Development Code prior to any request for a Certificate of Appropriateness.

2c. TREE SURVEY – At this time, the applicant has not provided staff with a tree survey. A tree survey must be provided to staff noting which existing trees will be impacted by the proposed new construction.

2d. ENTRANCES – According to the Guidelines for New Construction 1.B.i., primary building entrances should be oriented towards the primary street. The applicant has proposed to orient the primary entrance towards the intersection of Ostom and Magnolia Avenue. Staff finds this appropriate and consistent with the Guidelines.

2e. SCALE & MASS – Per the Guidelines for New Construction 2.A.i., a height and massing similar to historic structures in the vicinity of the proposed new construction should be used. The applicant has proposed a two story structure with an overall height of 24' – 3". Many structures in the immediate vicinity feature either one or one and a half stories of height. While the applicant has proposed two stories, many of the neighboring structures feature additional height and steep pitched roofs. Staff finds the proposed height to be appropriate and consistent with the Guidelines.

2f. FOUNDATION &FLOOR HEIGHTS – According to the Guidelines for New Construction 2.A.iii., foundation and floor heights should be aligned within one (1) foot of neighboring structure's foundations. The applicant has proposed a foundation height of 1' – 6". This is appropriate for the district and is consistent with the Guidelines.

2g. ROOF FORM – The applicant has proposed roof forms that include both front and side gabled roofs. Each street, Ostom, Magnolia Avenue and the intersection of the two will have a gable oriented towards them. Staff finds the proposed roof forms appropriate.

2h. WINDOW & DOOR OPENINGS – Per the Guidelines for New Construction 2.C.i., window and door openings with similar proportions of wall to window space as typical with nearby historic facades should be incorporated into new construction. The applicant has featured window openings that feature historic heights and widths as well as window groupings that are found historically on Craftsman structures. This is consistent with the Guidelines.

2i. LOT COVERAGE – The building footprint for new construction should be no more than fifty (50) percent of the size of total lot area. The applicant's proposed building footprint is consistent with the Guidelines for New Construction 2.D.i.

2j. MATERIALS – The applicant has noted the use of a standing seam metal roof and board and batten siding. Staff finds that the board and batten siding feature boards that are twelve (12) inches wide with battens that are 1 – ½" wide, that the standing seam metal roof feature panels that are 18 to 21 inches wide, seams are 1 to 2 inches in height, a crimped ridge seam or low profile ridge cap and a standard galvalume finish. A large profiled ridge cap shall not be used.

2k. WINDOW MATERIALS – At this time, the applicant has not provided information regarding window materials. Staff recommends the installation of wood windows that are consistent with the Historic Design Guidelines, Window Policy Document as noted in finding n that are to include traditional dimensions and profiles, be recessed within the window frame, feature traditional materials or appearance and feature traditional trim and sill details.

2l. ARCHITECTURAL DETAILS – New buildings should be designed to reflect their time while representing the

historic context of the district. Additionally, architectural details should be complementary in natural and should not detract from nearby historic structures. Generally, the proposed structure is consistent with the Guidelines; however.

Findings related to request item #3:
3a. SETBACKS & ORIENTATION – According to the Guidelines for New Construction, the front facades of new buildings are to align with front facades of adjacent buildings where a consistent setback has been established along the street frontage. Additionally, the orientation of new construction should be consistent with the historic example found on the block. The applicant has sited this structure in the middle of the lot. Generally, given the dimensions and shape of the existing lot, staff finds this arrangement appropriate.
3b. SETBACKS & ORIENTATION – While the site plan provided is sufficient for conceptual review of design elements, concern has been expressed regarding the accurateness of the survey provided for the property and actual property lines may differ from those represented in the submitted site plan. Any final plans must represent accurate setback conditions and demonstrate compliance with the Unified Development Code prior to any request for a Certificate of Appropriateness.
3c. TREE SURVEY – At this time, the applicant has not provided staff with a tree survey. A tree survey must be provided to staff noting which existing trees will be impacted by the proposed new construction.
3d. ENTRANCES – According to the Guidelines for New Construction 1.B.i., primary building entrances should be oriented towards the primary street. The applicant has proposed to orient the primary entrances towards both Ostrom and Magnolia Avenue. Staff finds this appropriate and consistent with the Guidelines.
3e. SCALE & MASS – Per the Guidelines for New Construction 2.A.i., a height and massing similar to historic structures in the vicinity of the proposed new construction should be used. The applicant has proposed a two story structure with an overall height of 24' – 0" for the primary mass and 28' – 9" for the two stair towers. Many structures in the immediate vicinity feature either one or one and a half stories of height. While the applicant has proposed two stories, many of the neighboring structures feature additional height and steep pitched roofs. Staff finds the proposed height to be appropriate and consistent with the Guidelines.
3f. FOUNDATION &FLOOR HEIGHTS – According to the Guidelines for New Construction 2.A.iii., foundation and floor heights should be aligned within one (1) foot of neighboring structure's foundations. The applicant has not specified the foundation height for this structure; however, staff finds that it should be comparable to that of the first structure and be consistent with the Guidelines.
3g. ROOF FORM – The applicant has proposed to modify the previously proposed flat roof form to include a gabled roof, consistent with the Guidelines.
3h. WINDOW & DOOR OPENINGS – Per the Guidelines for New Construction 2.C.i., window and door openings with similar proportions of wall to window space as typical with nearby historic facades should be incorporated into new construction. The applicant has featured window openings that feature historic heights and widths as well as window groupings that are typical for historic structures in the district.
3i. LOT COVERAGE – The building footprint for new construction should be no more than fifty (50) percent of the size of total lot area. The applicant's proposed building footprint is consistent with the Guidelines for New Construction 2.D.i.
3j. MATERIALS – The applicant has noted the use of both vertical and horizontal siding; however, has not noted the material. Staff finds the use of wood or Hardi board siding to be appropriate; however, staff finds that the horizontally oriented Hardi siding should feature an exposure of four inches, that the board and batten siding feature boards that are twelve (12) inches wide with battens that are 1 – ½" wide.
3k. WINDOW MATERIALS – At this time, the applicant has not provided information regarding window materials. Staff recommends the installation of wood windows that are consistent with the Historic Design Guidelines, Window Policy Document as noted in finding n that are to include traditional dimensions and profiles, be recessed within the window frame, feature traditional materials or appearance and feature traditional trim and sill details.
3l. ARCHITECTURAL DETAILS – As previously noted, the applicant has proposed a flat roof in combination with horizontal and vertical siding. Typically, flat roofs that are found throughout the River Road Historic District feature Spanish Eclectic architectural detailing including decorative roof parapets. Staff does not find the proposed roof to be appropriate in relationship to the proposed materials and adjacent proposed structure. Staff finds that a second structure that matches the design of the structure in request item #2 would be more appropriate.

Findings related to request item #4:
4a. ACCESSORY STRUCTURES – To the rear (west) of the structure noted in request item #2 and to the side(south) of the structure noted in request item #3, the applicant has proposed to construct two, two story accessory structures to accommodate vehicular parking as well as a second level dwelling unit. The proposed accessory

structures feature an overall profile and massing that is subordinate to the proposed, primary residential structures, feature appropriately detailed garage doors and feature architectural detailing that's consistent with the historic examples found throughout the River Road Historic District. Staff finds the proposed accessory structures appropriate and consistent with the Guidelines.
4b. SETBACKS & ORIENTATION – While the site plan provided is sufficient for conceptual review of design elements, concern has been expressed regarding the accurateness of the survey provided for the property and actual property lines may differ from those represented in the submitted site plan. Any final plans must represent accurate setback conditions and demonstrate compliance with the Unified Development Code prior to any request for a Certificate of Appropriateness.
4c. TREE SURVEY – At this time, the applicant has not provided staff with a tree survey. A tree survey must be provided to staff noting which existing trees will be impacted by the proposed new construction.

Findings related to request item #5:
5a. DRIVEWAYS – The applicant has proposed to introduce one new curb cut on the property to exist with an existing curb cut that is located on Ostrom Drive. The Guidelines for Site Elements note that historic profiles are to be used for the creation of curb cuts and that typical driveway widths are to be used, typically no wider than ten feet in historic districts; however, there are examples in the immediate area of curb cut and driveway widths that are wider than ten feet in width. Staff finds that the proposed driveway location are appropriate.
5b. TREE SURVEY – At this time, the applicant has not provided staff with a tree survey. A tree survey must be provided to staff noting which existing trees will be impacted by the proposed new construction.

Findings related to request item #6:
6a. As an alternative to demolition with new construction, the applicant has proposed to construct a two story accessory structure at the rear of the existing, historic structure. The Guidelines for New Construction 5.A. notes that accessory structures should be designed to be visually subordinate to the primary historic structure on the lot, should be no larger than 40 percent of the primary historic structure's footprint, should relate to the construction period and architecture of the primary historic structure and should feature windows and doors similar to those of the primary historic structure. The Guidelines for New Construction 5.B. notes that the prominent garage orientation of the block and the historic setback of accessory structures should be matched.
6b. SETBACKS & ORIENTATION – While the site plan provided is sufficient for conceptual review of design elements, concern has been expressed regarding the accurateness of the survey provided for the property and actual property lines may differ from those represented in the submitted site plan. Any final plans must represent accurate setback conditions and demonstrate compliance with the Unified Development Code prior to any request for a Certificate of Appropriateness.
6c. LOT LAYOUT – The lot at 205 Ostrom features an irregular shape and layout, inconsistent with the primary development pattern found in the district. The applicant has proposed to locate the accessory structure at the western portion of the site, to the side and rear of the primary historic structure, similar to the location of accessory structures found elsewhere in the district. While the general orientation of the accessory structure is skewed, staff finds the placement appropriate.
6d. TREE SURVEY – At this time, the applicant has not provided staff with a tree survey. A tree survey must be provided to staff noting which existing trees will be impacted by the proposed new construction.
6e. MASSING & HEIGHT – The proposed overall height of the accessory structure is approximately twenty-five(25) feet in height. The proposed height is greater than that of the primary historic structure on the lot. Staff finds that the applicant should study ways to decrease the overall height of the proposed structure such as reducing the top place of the second floor for a 1 ½ story accessory instead of a full two stories.
6f. MATERIALS – Regarding materials, the applicant has proposed materials that consist of an asphalt shingle roof, double hung wood windows, wood or Hardi board siding. Staff finds the proposed materials appropriate; however the proposed siding should feature an exposure of four inches and a smooth finish.

RECOMMENDATION:

1. Staff does not recommend approval of demolition based on findings 1.a. and 1.c.
If the HDRC finds that a loss of significance has occurred or finds that the criteria for establishing an unreasonable economic hardship have been met and approves the requested demolition, then staff makes the following recommendations regarding the requested new construction:
2 – 3. Staff recommends conceptual approval of items #2 and #3, the construction of two, two-story primary residential structure on the lot based on findings 2a through 3l, with the following stipulations. This is only applicable if item #1, demolition is approved.
i. That the applicant install board and batten siding feature boards that are twelve (12) inches wide with battens that are 1 – ½" wide, that the standing seam metal roof feature panels that are 18 to 21 inches wide, seams are 1 to

2 inches in height, a crimped ridge seam and a standard galvalume finish on the proposed structure in request item #2.
ii. That the applicant install wood or aluminum clad wood windows should be installed that feature meeting rails that are no taller than 1.25" and stiles no wider than 2.25". White manufacturer's color is not allowed, and color selection must be presented to staff. There should be a minimum of two inches in depth between the front face of the window trim and the front face of the top window sash. This must be accomplished by recessing the window sufficiently within the opening or with the installation of additional window trim to add thickness. Window trim must feature traditional dimensions and an architecturally appropriate sill detail. Window track components must be painted to match the window trim or concealed by a wood window screen set within the opening.
iii. That the applicant should fully utilize architectural elements that are consistently found on structures with flat roofs throughout the district in a contemporary manner and incorporate materials that are appropriate for the proposed form for request item #3 as noted in findings 3e and 3j.
iv. That the applicant propose a design for the accessory structure that is consistent with the Guidelines for New Construction as noted in finding 4a.
v. Archaeological investigations may be required. The archaeological scope of work should be submitted to the OHP archaeologists for review and approval prior to beginning the archaeological investigation. The development project shall comply with all federal, state, and local laws, rules, and regulations regarding archaeology.
vi. That a site plan with accurate setback dimensions and a tree survey must be submitted prior to an application final approval.

4 – 5. If the HDRC finds that a loss of significance has occurred or finds that the criteria for establishing an unreasonable economic hardship have been met and approves the requested demolition, then staff makes the following recommendations regarding the requested new construction:
Staff recommends approval of items #4 and #5, the construction of two, two story accessory structures and the installation of a new driveway, based on findings 4a through 5b with the following stipulations. This is only applicable if item #1, demolition is approved.
i. That the applicant install wood or aluminum clad wood windows should be installed that feature meeting rails that are no taller than 1.25" and stiles no wider than 2.25". White manufacturer's color is not allowed, and color selection must be presented to staff. There should be a minimum of two inches in depth between the front face of the window trim and the front face of the top window sash. This must be accomplished by recessing the window sufficiently within the opening or with the installation of additional window trim to add thickness. Window trim must feature traditional dimensions and an architecturally appropriate sill detail. Window track components must be painted to match the window trim or concealed by a wood window screen set within the opening.
ii. That the single garage door be eliminated and a two-stall configuration with two separate door be used instead. The doors must feature materials and a profile consistent with historic examples found in the district.
iii. That a site plan with accurate setback dimensions and a tree survey must be submitted prior to an application final approval.

6. Staff recommends conceptual approval of the placement and orientation of the proposed accessory structure, item #6 based on findings 6a through 6f with the following stipulations. This is only applicable if item #1, demolition is not approved.
i. That the applicant propose a way to decrease the overall height of the proposed structure such as reducing the top plate of the second floor for a 1 ½ story accessory instead of a full two stories.
ii. That a site plan with accurate setback dimensions and a tree survey must be submitted prior to an application final approval.
iii. That the applicant install wood or aluminum clad wood windows should be installed that feature meeting rails that are no taller than 1.25" and stiles no wider than 2.25". White manufacturer's color is not allowed, and color selection must be presented to staff. There should be a minimum of two inches in depth between the front face of the window trim and the front face of the top window sash. This must be accomplished by recessing the window sufficiently within the opening or with the installation of additional window trim to add thickness. Window trim must feature traditional dimensions and an architecturally appropriate sill detail. Window track components must be painted to match the window trim or concealed by a wood window screen set within the opening.

iv. That the single garage door be eliminated and a two-stall configuration with two separate door be used instead. The doors must feature materials and a profile consistent with historic examples found in the district.

COMMISSION ACTION:

Denied.

Shanon Shea Miller
Historic Preservation Officer

Last Year for info only

Traditional favorites that feel like home.

Oakridge® Color Availability

This Color for 205 Ostrom Drive

Estate Gray†

Color Availability Map

Two Car Garage immediate neighbor #1

Two Car Garage immediate neighbor #2

We have included these slides as an objector said there was no two car garages in River Road. You can see from the three roads that border our property there are…

Another Two Car Garage
immediate neighbor #3

We have included these slides as an objector said there was no two car garages in River Road.
You can see from the three roads that border our property there are Three shown with another right next to # 3

View from Proposed Accessory Building

View from our Curb Cut of a double garage and a two story house in background.

OHP Archaeology have no objections to demolition

Archaeology Plan

In talks with Matthew Elverson of the OHP Archaeological dept. as well as forwarding the stipulation by HDRC, he has requested that my plan be limited to informing him 48hrs in advance of deep trench excavation on site.

He does not see that demolition is a concern but new trenching would need to be looked at.

Contact: Matthew.elverson@sanantonio.gov

By way of the conversation with Matthew Elverson the HDRC should note that we have fulfilled the plan and will act on it as shown above.

- HDRC Ask: ARCHAEOLOGY- Archaeological investigations may be required. The archaeological scope of work should be submitted to the OHP archaeologists for review and approval prior to beginning the archaeological investigation. The development project shall comply with all federal, state, and local laws, rules, and regulations regarding archaeology.

205 Ostrom Drive
Photo from Dewberry and Magnolia Intersection

ReCycle

5690 Easterling #4, San Antonio, Texas 78251 REF: 205 Ostrom Drive, SA TX 78212

Mr. Stapleton,

Upon inspection of the building it is in our opinion that approximately 70-80% the flooring, window frames and other wood materials appear to be rotted or infested. The structural engineers' reports clearly confirm and steel my opinion that this building is rotten inside and out. When houses experience this many years of neglect, the wooden materials are subject to great scrutiny. When infested, they require tremendous chemical treatment to ensure we are not potentially contaminating another site. More important in this case is our inability to remove the materials as the rot destroys the materials during removal process, prior to even going on the trucks. What we can suggest upon review once the building is opened/demolished is the following, relating to somewhat solid wood that will be separated by your demo contractor.

Lumber and Other Wood Scraps:

Ground into wood chips and mulch that can be used for:

- Landscape mulch
- Tree root zone protection
- Erosion control
- Walk paths
- Soil amendment

Plumbing fixtures and copper (though there looks to have at quite a bit removed or stolen) will be assessed for standard recycling procedures. Any fixtures found to be unique and or antique will be made available to sources for restoration in areas of historical value such as the Monta Visa area.

By our count we saw there are 20 wooden windows some hidden behind those "industrial looking shutters". Windows and associated hardware (weights, pulleys, etc) will be assessed for historical value. Again, those items will be made available to sources catering to historical preservation. Along with the metal shutters and other

miscellaneous metals, nails are automatically separated from scrap wood during grinding. We will collect the separated nails and other discarded metals and deliver them to a metal recycler(s) for fair market value.

The roof looks like multiple layers placed on top of each other. With the wood rot and hence the sagging, we can suggest the following.

Roofing Tiles and Asphalt Roofing Shingles:

Ground and used as:

- Aggregate
- Fill

Again, I'm sorry that I was unable to speak at your last hearing. I was fully prepared to go over any questions about the above plan proposals. I hope the committee reviews the proposed salvage/recycle plan and see's that we can be a service to the community as well as the environment. When you get another opportunity to go before the committee, with advanced notice, I will do my utmost to be present to answer any questions. As you paid the non-refundable retainer, I will not be charging you for the subsequent committee meeting attendance. I can certainly appreciate your dedication to this project and personally appreciate your commitment to recycle and salvage of all parts materials.

I'm not familiar with any HDRC recycle plan(s) on structures. Therefore can not elaborate on their concerns or what they wanted to see. Recycling, while a fantastic concept, cannot be realized on all materials. However, we will help you through this process!

Thank you for the retainer and we hope this is enough information for the amount of recycling we can do. We will obviously have a much better grasp of quantities and quality as we begin the process.

Sincerely,

John Cammack, President/Owner

NOTE: while in the garage area, there were a number of needles and evidence of feces (human and/or animal). Extra care should be taken when in proximity of this area.

205 Ostrom Drive Updated
Pics of cleared brush from house

205 Ostrom Drive
Photo from Magnolia &
Lindell Intersection

205 Ostrom Drive
Photo from Ostrom &
Dewberry Intersection

205 Ostrom Drive
Interior Photo’s
23 Years Abandoned

205 Ostrom Drive
Interior Photo’s
23 Years Abandoned

JamesHardie

Siding | Trim

Achieve authentic character and

UNCOMPROMISING PERFORMANCE.

SOUTH
Product
Catalog

It's time to
BUILD SOMETHING TIMELESS.

JamesHardie®

Installed on over 8 million homes* from coast to coast, James Hardie® fiber cement siding products are designed to resist the most extreme conditions while romancing the senses. Enjoy the warm, natural character of wood with unprecedented peace of mind. It's easy to see what makes James Hardie the market leader.

UNIQUE FORMULATION

We use the highest quality raw materials and proprietary additives for enhanced strength and moisture protection.

FINISHING TECHNOLOGY

Baked-on color delivers a beautiful finish that resists fading and makes a lasting impression.

COMPLETE EXTERIOR™

Offers homeowners an unrivaled collection of design options with exceptional warranties through a single, trusted manufacturer.

*Estimate based on total James Hardie siding sales through 2016 and average housing unit size.

CONTENTS

4	HardieZone® System
6	Unique Formulation
8	Finishing Technology
10	James Hardie Complete Exterior™
12	HardiePlank® Lap Siding
14	HardiePanel® Vertical Siding
16	HardieShingle® Siding
18	HardieTrim® Boards
20	HardieSoffit® Panels
22	Color Inspiration
24	Color Selection
26	HardieWrap® Weather Barrier
27	Finishing Touches
28	The James Hardie Difference
30	Warranty and Endorsements

HardieZone® System

Only James Hardie fiber cement products are Engineered for Climate®. In the northern U.S. and Canada, HZ5® products resist shrinking, swelling and cracking even after years of wet or freezing conditions. HZ10® products help protect homes from hot, humid conditions, blistering sun and more.

With James Hardie siding and trim, homeowners have an exterior that's tougher than the elements and easy on the eyes.

NO MATTER WHAT NATURE BRINGS

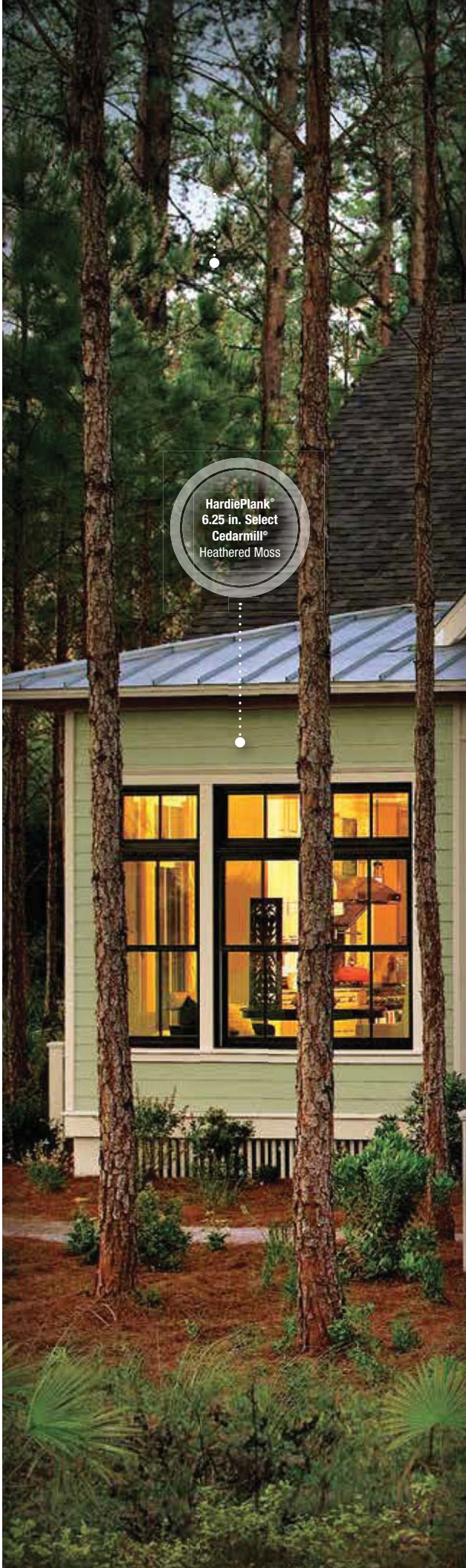

HZ10®

TOUGHER THAN THE ELEMENTS

- **Stands up to storms and harsh weather**
- **Water resistant to protect against swelling, warping and cracking; also resists mold damage**
- **Won't be eaten by animals or insects**
- **Fire resistant**
- **Helps reduce time and money spent on maintenance**

Resist the elements **WITH IRRESISTIBLE CHARM.**

Unique Formulation
HZ10® Substrate

Not all fiber cement is the same. James Hardie HZ10 products contain the highest quality raw materials. Our unique formulation, combined with innovative product design and manufacturing processes, create a substrate that is specifically engineered to resist moisture, cracking, shrinking and swelling for increased durability and workability.

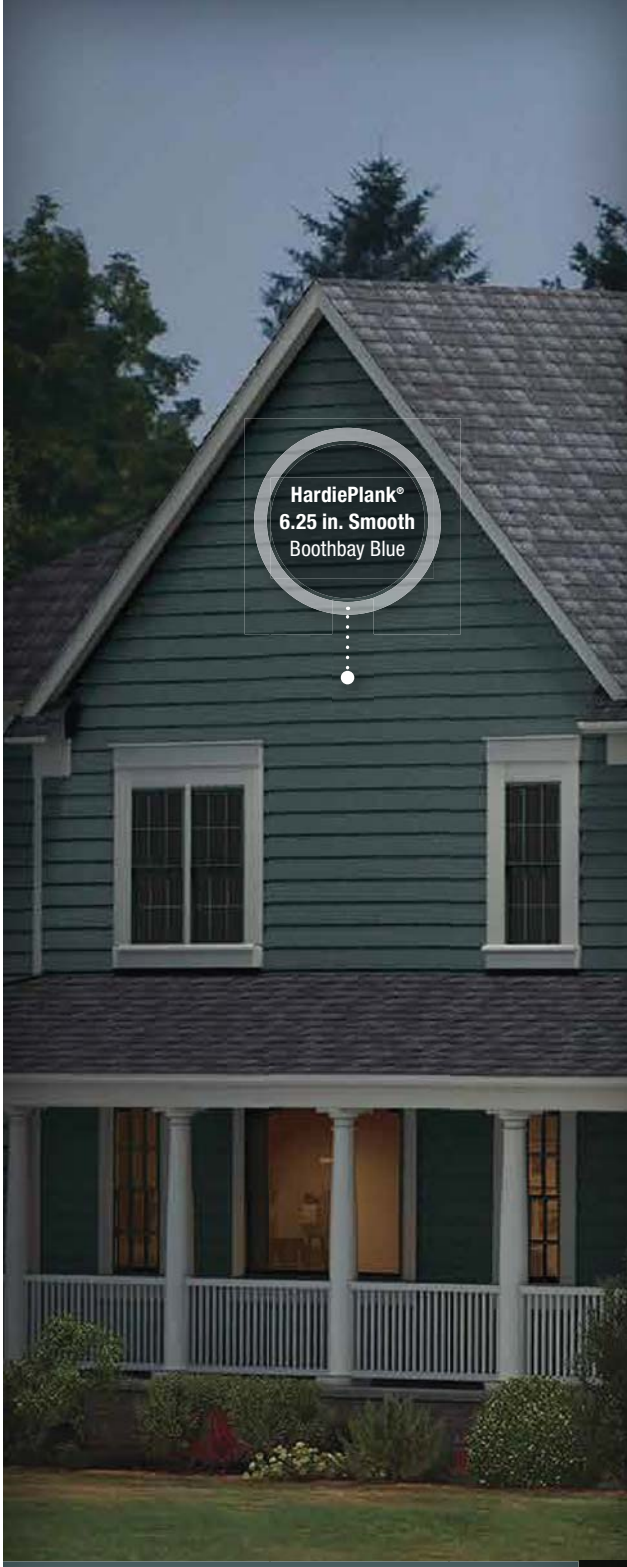

PROPRIETARY ENHANCEMENTS CREATE **DURABLE JAMES HARDIE® SIDING**

Perfect balance of strength and workability

Our balance of high-quality Portland cement, sand and cellulose fiber delivers the best combination of strength and workability.

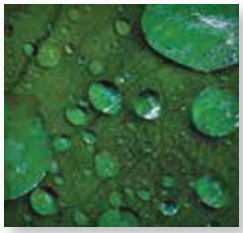

Enhanced moisture resistance for unmatched durability

Patented and proprietary additives are chemically bonded within the HZ10 substrate matrix to provide durable moisture resistance.

Increased dimensional stability

Our siding is engineered at the microscopic level to create a fiber cement composite with superior dimensional stability that helps protect against shrinking and splitting.

Integrity is ingrained
IN EVERYTHING WE DO.

HardieTrim®
5/4 x 5.5 in.
Arctic White

UNMATCHED INVESTMENT IN MANUFACTURING SCALE AND PRODUCT INNOVATION

- Largest manufacturer of fiber cement in North America
- 5x more capacity than our largest competitor
- More than 100 process and product quality checks
- 100+ scientists and engineers provide dedicated resources for continuous innovation in manufacturing and product development
- More U.S. fiber cement patents than any competitor

YOUR RETURNS ON OUR INVESTMENT

- Superior siding and trim performance for beauty that lasts
- Consistency in appearance from board to board
- Natural-looking profiles for authentic character

Finishing Technology

Gold Primer

A quality primer is the first step to ensuring that the paint color you select beautifully expresses a home's true character now – and for years to come. Our distinctive gold primer is climate-tested and engineered for use with paint on James Hardie fiber cement siding products. It helps to provide consistent, long-lasting paint adhesion, even in the most demanding conditions.

ColorPlus® Technology

Our advanced ColorPlus® Technology finishes deliver the ultimate in aesthetics and performance. Our products aren't simply painted at the factory. Multiple coats of color are baked onto the board, giving homes a durable, rich, consistent color no field-applied house paint can match.

- Superior finish adhesion
- Superior color retention
- Superior UV resistance
- Year-round installation

For timeless beauty
BEGIN WITH THE FINISH.

Exceptional warranties through a
SINGLE, TRUSTED MANUFACTURER.

James Hardie Complete Exterior™

Top to bottom, our exterior product line is defined by excellent performance, aesthetics and design options.

Provide protection from the elements, showcase a homeowner's individual style and install peace of mind with exceptional warranties through a single, trusted manufacturer.

HardiePlank®

Sleek and strong, HardiePlank® lap siding is not just our best-selling product – it's the most popular brand of siding in America.

With a full spectrum of colors and textures, homeowners can enjoy protection from the elements and the versatility to make their dream home a reality. From Victorians to Colonials, HardiePlank lap siding sets the standard in exterior cladding.

A classic look for **THE HOME OF THEIR DREAMS.**

SELECT CEDARMILL©*

Woodstock Brown

SMOOTH*

Countrylane Red

Thickness	5/16 in.					
Length	12 ft. planks					
Width	5.25 in.	6.25 in.	7.25 in.	8.25 in.	9.25 in.	12 in.
Exposure	4 in.	5 in.	6 in.	7 in.	8 in.	10.75 in.
ColorPlus Pcs./Pallet	324	280	252	210		
Prime Pcs./Pallet	360	308	252	230	190	152
Pcs./Sq.	25.0	20.0	16.7	14.3	12.5	9.3

CUSTOM BEADED CEDARMILL©

Light Mist

CUSTOM BEADED SMOOTH

Heathered Moss

Thickness	5/16 in.
Length	12 ft. planks
Width	8.25 in.
Exposure	7 in.
ColorPlus Pcs./Pallet	210
Prime Pcs./Pallet	240
Pcs./Sq.	14.3

CUSTOM COLONIAL ROUGHSAWN®

Mountain Sage

CUSTOM COLONIAL SMOOTH®

Timber Bark

Thickness	5/16 in.
Length	12 ft. planks
Width	8 in.
Exposure	6.75 in.
ColorPlus Pcs./Pallet	216
Prime Pcs./Pallet	240
Pcs./Sq.	14.9

*6.25 in. and 8.25 in. also available in coastal colors. 9.25 in. and 12 in. only available primed.

Products are available primed or with ColorPlus Technology finishes. For more details, visit **jameshardiepros.com**

HardiePanel®

HardiePanel® vertical siding delivers style and substance. When combined with HardieTrim® boards, it achieves the rustic board-and-batten look that defines cottage charm. The covered seams contribute to a well-insulated home.

Its crisp, clean lines make HardiePanel vertical siding a smart choice for strong, contemporary designs.

True to the tradition of **PERFORMANCE AND BEAUTY.**

SELECT CEDARMILL©

Navajo Beige

Thickness	5/16 in.		
Size	4 ft. x 8 ft.	4 ft. x 9 ft.*	4 ft. x 10 ft.
Pcs./Pallet	50	50	50
Pcs./Sq.	3.2	2.8	2.5

SMOOTH

Evening Blue

Thickness	5/16 in.		
Size	4 ft. x 8 ft.	4 ft. x 9 ft.*	4 ft. x 10 ft.
Pcs./Pallet	50	50	50
Pcs./Sq.	3.2	2.8	2.5

STUCCO

Navajo Beige

Thickness	5/16 in.		
Size	4 ft. x 8 ft.	4 ft. x 9 ft.*	4 ft. x 10 ft.
Pcs./Pallet	50	50	50
Pcs./Sq.	3.2	2.8	2.5

SIERRA 8

Not available with ColorPlus Technology

Thickness	5/16 in.		
Size	4 ft. x 8 ft.	4 ft. x 9 ft.*	4 ft. x 10 ft.
Pcs./Pallet	50	50	50
Pcs./Sq.	3.2	2.8	2.5

*4 ft. x 9 ft. HardiePanel vertical siding only available primed.

Products are available primed or with ColorPlus Technology finishes. For more details, visit **jameshardiepros.com**

HardieShingle®

Restore the look of a grand Cape Cod or add distinction to a handsome bungalow. HardieShingle® siding embodies the enchanting look of cedar shingles with lower maintenance.

Better than the real thing, HardieShingle siding resists rotting, curling, warping and splitting.

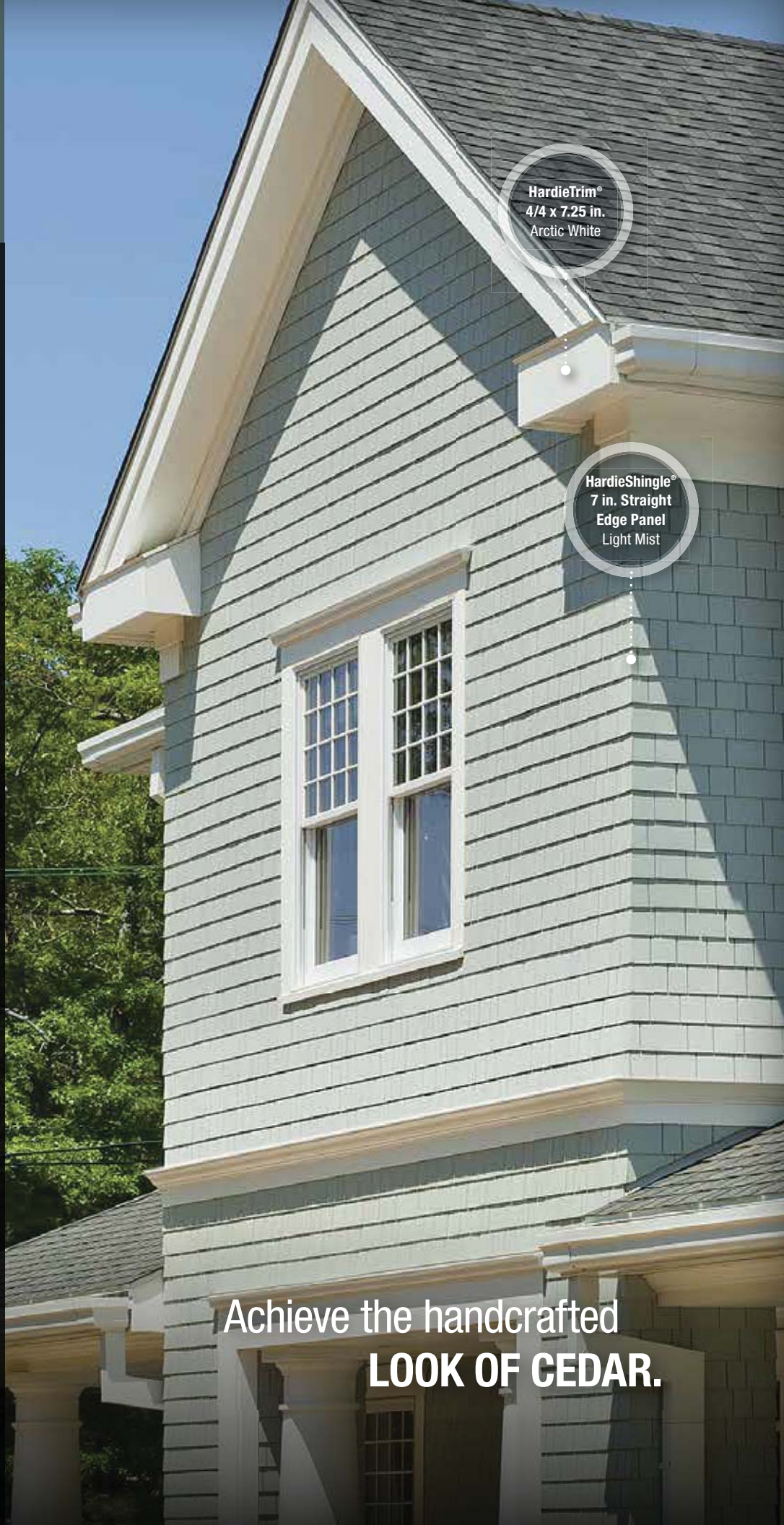

Achieve the handcrafted **LOOK OF CEDAR.**

STAGGERED EDGE PANEL

Sandstone Beige

Thickness	1/4 in.
Length	48 in.
Height	15.25 in.
Exp.	6 in.
Pcs./Pallet	100
Sq./Pallet	2
Pcs./Sq.	50

STRAIGHT EDGE PANEL

Iron Gray

Thickness	1/4 in.
Length	48 in.
Height	15.25 in.
Exp.	7 in.
Pcs./Pallet	86
Sq./Pallet	2
Pcs./Sq.	43

INDIVIDUAL SHINGLES

Monterey Taupe

Thickness	1/4 in.				
Length	4.2 in.	5.5 in.	6.75 in.	7.25 in.	10 in.
Height	15.25 in.				
Exp.	7 in.				
Pcs./Pallet	630				
Sq./Pallet	2				
Pcs./Sq.	315				

HALF ROUNDS

Not available with ColorPlus Technology

Thickness	1/4 in.
Length	48 in.
Height	15.25 in.
Exp.	7 in.
Pcs./Pallet	86
Sq./Pallet	2
Pcs./Sq.	43

Products are available primed or with ColorPlus Technology finishes. For more details, visit **jameshardiepros.com**

HardieTrim®

Form meets function at every angle with HardieTrim® boards. With an authentic look, HardieTrim boards provide design flexibility for columns, friezes, doors, windows and other accent areas.

Better than wood, it complements your long-lasting, lower maintenance James Hardie siding – adding punctuation to your design statement.

The performance you require
THE DISTINCTIVENESS YOU DESIRE.

HARDIETRIM® BOARDS

4/4 RUSTIC GRAIN©
Autumn Tan

4/4 SMOOTH
Autumn Tan

Thickness	.75 in.					
Length	12 ft. boards					
Width	1.65 in.*	3.5 in.	5.5 in.	7.25 in.	9.25 in.	11.25 in.
Pcs./Pallet	405	322	184	138	115	92

5/4 RUSTIC GRAIN©
Autumn Tan

5/4 SMOOTH
Autumn Tan

Thickness	1 in.				
Length	12 ft. boards				
Width	3.5 in.	5.5 in.	7.25 in.	9.25 in.	11.25 in.
Pcs./Pallet	238	136	102	85	68

CROWN MOULDING
Arctic White

Thickness	.75 in.	
Length	12 ft. boards	
Width	3.25 in.	5.25 in.
Pcs./Pallet	50	48

HARDIETRIM® BATTEN BOARDS

RUSTIC GRAIN©
Autumn Tan

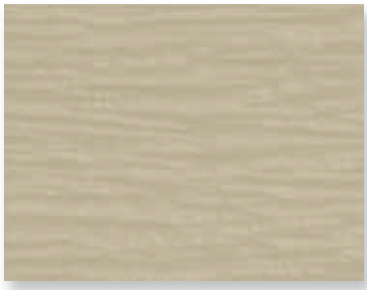

SMOOTH
Autumn Tan

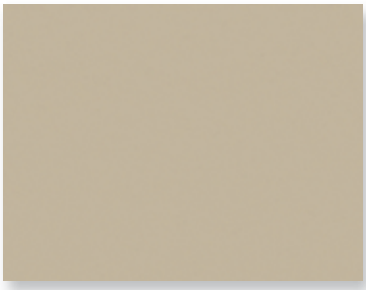

Thickness	.75 in.
Length	12 ft. boards
Width	2.5 in.
Pcs./Pallet	437

*1.65 in. boards only available primed

Products are available primed or with ColorPlus Technology finishes. For more details on availability of sizes, textures and additional HardieTrim Moulding profiles in your area, visit **jameshardiepros.com**

HardieSoffit®

A home is only as strong as its weakest point. HardieSoffit® panels reinforce your work by protecting the vulnerable gap between eaves and exterior walls.

Available in vented, non-vented and a range of pre-cut sizes, these panels complete your design and protect it from moisture and pests.

VENTILATION BENEFITS

Using vented soffit improves ventilation in the attic space and reduces the chance of water vapor condensation that can lead to issues such as mold and mildew growth, stained ceilings and damage to the framing of the house.

In warm climates, HardieSoffit panels allow hot, humid air to escape, which not only helps prevent condensation in the attic, but can also help reduce air conditioning costs.

In cool climates, HardieSoffit panels help prevent condensation from forming on the interior side of the roof sheathing and reduce the chances of roof-damaging ice dams.

For complete confidence
EVERY DETAIL MATTERS.

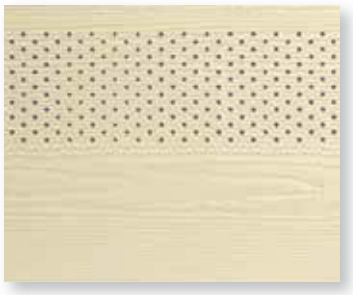

VENTED SMOOTH & CEDARMILL©

Sail Cloth

Thickness	1/4 in.		
Length	12 ft.	12 ft.	8 ft.
Width	12 in.	16 in.	24 in.
ColorPlus Pcs./Pallet	216	156	108
Prime Pcs./Pallet	200	150	100

NON-VENTED SMOOTH & CEDARMILL©

Sail Cloth

Thickness	1/4 in.			
Length	12 ft.	12 ft.	8 ft.	8 ft.*
Width	12 in.	16 in.	24 in.	48 in.
ColorPlus Pcs./Pallet	216	156	108	
Prime Pcs./Pallet	200	150	100	50

BEADED PORCH PANEL**

Arctic White

Thickness	1/4 in.
Length	8 ft.
Width	48 in.
Pcs./Pallet	50

Using the proper amount of vented HardieSoffit panels is crucial to a building's ventilation performance. James Hardie has taken the guess work out of soffit ventilation by providing the table below illustrating the minimum amount of vented HardieSoffit panels recommended for your attic space.***

ATTIC SQ. FT.	LINEAR FT. OF VENTED SOFFIT
200	10
300	14
400	19
500	24
600	29
700	34
800	38
900	43
1000	48
1100	53
1200	58
1300	62
1400	67
1500	72
1600	77
1700	82
1800	86
1900	91
2000	96
2100	101
2200	106
2300	110
2400	115
2500	120
2600	125
2700	130
2800	134
2900	139
3000	144
3100	149

*These 48 in. x 8 ft. panels only available primed.
**Beaded Porch Panel is available in all 11 standard soffit colors, as well as Cool Breeze.
***Linear Feet of Vented Soffit calculation is based on 2012 International Residential Code (IRC) Section 806.2, Exception 2, with a 50% upper attic and 50% lower attic split of required ventilation, using soffit with a net free ventilation of 5 square inches per linear foot. This Exception is also approved in 2015 IRC Section 806.2. Always consult a building design professional to confirm attic ventilation meets local building code requirements.

Products are available primed or with ColorPlus Technology finishes. For more details, visit **jameshardiepros.com**

Cast your homes in
THE MOST ROMANTIC LIGHT.

SUBTLE BLENDS

Color Inspiration

COOL TONES

COMPLEMENTARY

WARM TONES

Use deeper body colors for a warm, welcoming feeling. Make homes appear larger with soft contrasts between siding and trim. The right color combinations leave lasting impressions. Our color specialists designed the rich ColorPlus finish collection to help you express what's special about every home you build.

Express the true nature of a home's character with **ColorPlus® Technology**

PLANK, PANEL, BATTEN AND SHINGLE COLORS

ARCTIC WHITE

COBBLE STONE

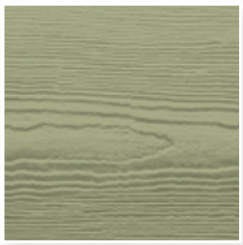
HEATHERED MOSS

PEARL GRAY

LIGHT MIST

SAIL CLOTH

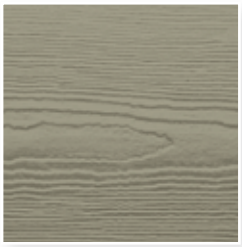
MONTEREY TAUPE

MOUNTAIN SAGE

GRAY SLATE

BOOTHBAY BLUE

WOODLAND CREAM

AUTUMN TAN

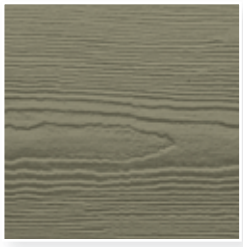
WOODSTOCK BROWN

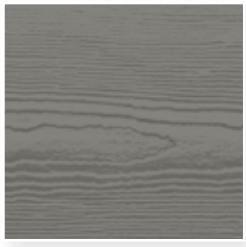
AGED PEWTER

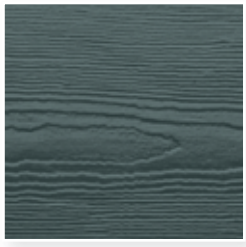
EVENING BLUE

NAVAJO BEIGE

KHAKI BROWN

TIMBER BARK

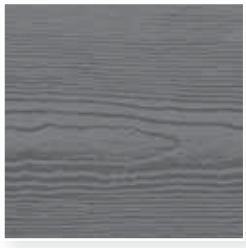
NIGHT GRAY

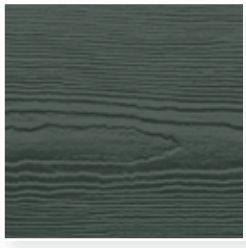
IRON GRAY

SANDSTONE BEIGE

CHESTNUT BROWN

COUNTRYLANE RED

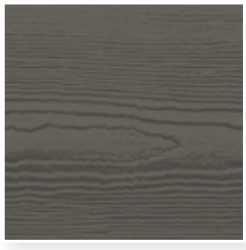
RICH ESPRESSO

Selecting a color? Request a product sample at **jameshardiepros.com/samples**

Colors shown are as accurate as printing methods will permit. Please see actual product sample for true color.

Color Selection

TRIM AND SOFFIT COLORS

ARCTIC WHITE

SANDSTONE BEIGE

MONTEREY TAUPE

SAIL CLOTH

AUTUMN TAN

WOODSTOCK BROWN

NAVAJO BEIGE

KHAKI BROWN

TIMBER BARK

COBBLE STONE

PEARL GRAY

PLANK COASTAL COLORS*

CORAL COAST

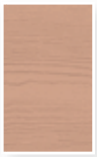
TERRA COTTA

PINK SAND

COOL BREEZE

AQUA MARINE

*Coastal colors are available exclusively in HardiePlank lap siding, Smooth and Select Cedarmill in 8.25 in. and 6.25 in. widths only.

Explore our color palettes and differentiate your homes with stunning curb appeal. These distinctive tones are drawn from natural environments, complementing your design with the look of America's idyllic neighborhoods.

HardieWrap®

No exterior cladding can prevent 100% of water intrusion. Your homes should have an additional line of defense. HardieWrap® weather barrier provides a superior balance of water resistance and breathability, keeping the area within the wall drier. This helps prevent moisture accumulation that may lead to mold and mildew growth.

INSTALLATION ADVANTAGES

- Thicker, more durable material for easier, quicker installation
- Superior tear resistance helps prevent water infiltration
- Can be installed with staples in place of cap nails for cost savings
- Provides a higher level of performance, no matter what type of cladding you specify

WEATHER BARRIER

Thickness	11 mil.			
Length	100 ft.	100 ft.	150 ft.	150 ft.
Width	3 ft.	9 ft.	9 ft.	10 ft.

FLEX FLASHING

Thickness	60 mil.	
Length	75 ft.	75 ft.
Width	6 in.	9 in.

PRO-FLASHING

Thickness	20 mil.		
Length	75 ft.	75 ft.	75 ft.
Width	4 in.	6 in.	9 in.

SEAM TAPE

Thickness	3.2 mil.
Length	164 ft.
Width	1-7/8 in.

To learn more about our weather barrier's advantages, visit **jameshardiepros.com**

Finishing Touches

ColorPlus Technology Accessories

TOUCH-UP KITS

Specially formulated to match ColorPlus Technology finishes, our Touch-up Kits offer resistance to aging, color change and chalking. Included in the kits, Touch-up Pens conceal nailheads and very small nicks and scratches.

COLOR-MATCHED CAULK

OSI® QUAD® MAX sealant offers a high performance sealant solution to color match James Hardie ColorPlus products.

Trim Accessories

FLAT TABS

Reduce nail holes and improve the aesthetic of trim applications around windows, doors and band boards.

CORNER TABS

Use corner tabs to reduce the appearance of nail holes that would detract from the finished look of corner trim installations.

Find useful job-site tips in our industry-leading Best Practices Guide.
For the latest installation instructions, visit **jameshardiepros.com**

As unforgettable
AS IT IS UNCOMPROMISING.

See the James Hardie Difference

JAMES HARDIE • PROTECT & BEAUTIFY •
8 MILLION HOMES AND COUNTING

James Hardie invented fiber cement. Over 8 million homes* later, we continue to set the standard in premium, high-performance exterior cladding. Our products deliver uncompromising durability and finish quality for a beautiful, lower maintenance exterior.

Our unrivaled investment in R&D and constant innovations in product design, manufacturing and distribution allow us to remain steps ahead of the competition. With the support of our employees, partners and exceptional warranties, we're committed to protecting your customers' homes while helping your business grow.

*Estimate based on total James Hardie siding sales through 2016 and average housing unit size.

Warranty

Protect your homes with North America's #1 brand of siding backed by exceptional warranties. Unlike other brands, James Hardie doesn't prorate our siding and trim warranty coverage. We stand behind our siding 100% for 30 years and trim for 15 years.

ColorPlus Technology finishes come with a 15-year limited warranty.

James Hardie Non-Prorated Siding Substrate Warranty Coverage

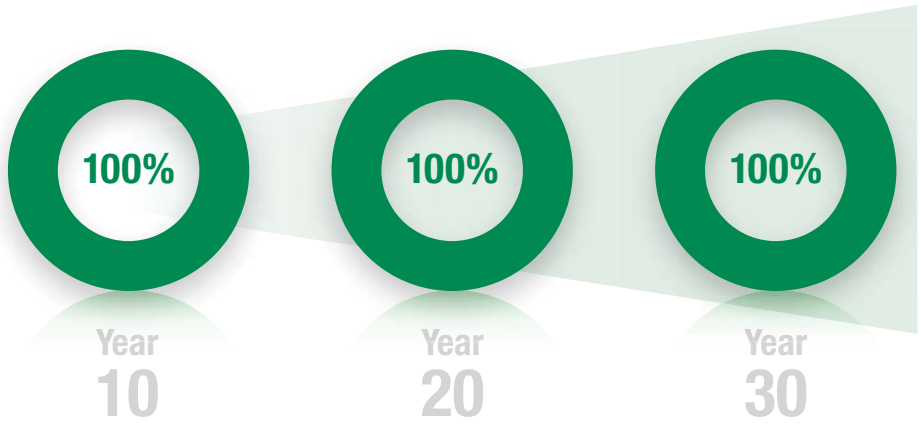

Endorsements – a reputation built on trust

For decades, our fiber cement products have been used to create better places to live. Each new home stands as a testament to our uncompromising quality. That proven track record has earned the loyalty of millions of homeowners and the endorsements of trusted authorities across the building industry.*

Featured on the **DIY Network's Blog Cabin** since 2012

Chosen by builders as a **Brand Leader** in **Builder Magazine** since 2009

HardiePlank lap siding is backed by the **Good Housekeeping Seal**

*Endorsements accurate as of 2017.

Make every home

AN EXPRESSION OF YOUR CHARACTER.

1.888.542.7343 | **jameshardiepros.com**

© 2018 James Hardie Building Products Inc. All Rights Reserved. TM, SM, and ® denote trademarks or registered trademarks of James Hardie Technology Limited. **HS1889 04/18**

JamesHardie

Siding | Trim

Fiberglass-Based Asphalt Shingles & Accessories

Guide Specifications

[illegible]

[illegible] ASPHALT SHINGLES & ACCESSORIES

PART 1 GENERAL

1.1 [illegible]

A. [illegible]

1. [illegible]
2. [illegible]
3. [illegible]
4. [illegible]
5. [illegible]
6. [illegible]
7. [illegible]
8. [illegible]

1.2 RELATED [illegible]

[illegible]

A. [illegible]

B. [illegible]

C. [illegible]

D. [illegible]

E. [illegible]

F. [illegible]

G. [illegible]

[illegible]

1.3 [illegible]

A. [illegible] (ASCE)
1. ASCE [illegible]

B. [illegible] (ARMA)

Fiberglass-Based Asphalt Shingles & Accessories

Guide Specifications

C□ AS□M □□□□r□□□□□□□□□AS□M□□□

□□ AS□M A□□□□A□□□M □S□□□d□rd S□□□□□□□□□□□□ □r S□□□□S□□□□□□□□□ C□□□□d □□ □□□□□□□□d□r □□□□□ r□□□ A□□□□□C□□□□d □□ □□□□□□□□□□□d□□□ □□□□ □ □□□D□□ □r□□□□□□□

□□ AS□M □□□□□ □S□□□d□rd S□□□□□□□□□□□□ □r A□□□ □□□□□ □□d A□□□ □□□□□ A□□□ S□□□□□□□d □□□□□□□

□□ AS□M □□□□□ – S□□□d□rd S□□□□□□□□□□□□ □r C□□□□r S□□□□□□□d S□r□□ □r □□d□□□ C□□□r□□□□□□

□□ AS□M D□□□ □S□□□d□rd S□□□□□□□□□□□□ □r A□□□□□□S□□□r□□□d □r□□□□□ □□□□□ □□d □□ R□□□□□□ □□d □ □□□r□r□□□□□□

□□ AS□M D□□□ □S□□□d□rd □□□□M□□□□d □r S□□ □□□□□□□□□□□□□□d A□□□□□□ □□A□□□□□R□□□ R□□□□□□□C□□ S□□□□□□□□□d S□□□□□□ □ □□d □□ R□□□□□ □□d □ □□□r□r□□□□□□

□□ AS□M D□□□□ – S□□□d□rd □□r□ □□□□□□□ R□□□□□□ □□ R□□□□□ □□d □ □□□r□r□□□□□□

□□ AS□M D□□□□ □S□□□d□rd S□□□□□□□□□□□□ □r S□□□Ad□r□□ □ □□□ □r M□d□□□d □□□□ □□□□ S□□□□ M□□□r□□□ □ □□d □□ S□□□ R□□□□□ □ □d□r□□□□ □□□□□r □□□ D□□ □r□□□□□□□□

□□ AS□M D□□□□ □S□□□d□rd S□□□□□□□□□□□□ □r C□□□□ A A□□□□□□S□□□□□□ S□r□□□d □ □□□ M□□□r□□ □r□□□□□□□

□□ AS□M D□□□□ □S□□□d□rd □□□□M□□□□d □r □ □d R□□□□□□□□ □□A□□□□□S□□□□□□ □□□□□□d□□d M□□□□d□□

□□□ AS□M D□□□□ □S□□□d□rd S□□□□□□□□□□□□ □r A□□□□□S□□□□□□ M□d□ □r□□ □ □□□□ □□□□□d S□r□□□d □ □□□ M□□□r□□□r□□□□□

□□□ AS□M D□□□□ □S□□□d□rd S□□□□□□□□□□□□ □r A□□□□□R□□□C□□ □□□A□□□□□□□□r□□□

□□□ AS□M D□□□□ □S□□□d□rd S□□□□□□□□□□□□ □r A□□□□□S□□r□□d □r□□□□ □□□□ □□d r□□□ □□□□ □□d S□□□ S□□□ R□□□□□□

□□□ AS□M D□□□□ □S□□□d□rd □□□□M□□□□d □r M□□□r□□ □□□□□A□□□□S□□□□□ M□□□□□□□□□□ □□□□ R□□□□□□□□□

□□□ AS□M D□□□□ □S□□□d□rd S□□□□□□□□□□□□ □r □ □d r□□□ □□□□□□C□□□□□□□□ □□r□□□ □□□r□ □ □d S□□□ S□□□ R□□□□□□

□□□ AS□M D□□□□ □S□□□d□rd □□□□M□□□□d □r □ □d R□□□□□□□□ □□S□□□d A□□□□□S□□□□□ □□ □□□□ □r□□□ □□□R□□□□□□□ M□□□□d□□

□□□ AS□M E□□□ □S□□□d□rd □□□□M□□□□d □ □r □r□ □□□□□ □□R□□□C□□r□□□□

□□□ AS□M □□□□□ □S□□□d□rd S□□□□□□□□□□□□ □r Dr□□□ □□□□□□r□□□ □□□□ S□□□□□□□d S□□□□□□

□□□ AS□M D□□□□ – S□□□d□rd S□□□□□□□□□□□□ □r S□r□□□ □ □□□d□□□□ S□r□□□ □S□S□M□d□□□d □□□□ □□□□ S□□□□ M□□r□□□ □ □□□□ □ □□□□ □□□r R□□□r□□□ □□□□

□□□ AS□M D□□□□ – S□□□d□rd S□□□□□□□□□□□□ □r S□r□□□ □ □□□d□□□□ S□r□□□ □S□S□M□d□□□d □□□□ □□□□ S□□□□ M□□r□□□ □ □□□□ □ □□□□□□r R□□□r□□□ □□□□

D□ C□□□R□□□R□□□□ C□□□□□□□CRRC□□ □r□d□□□R□□□□ □r□□r□□ □

E□ C□□□d□□ S□□□d□rd A□□□□□□□□ □CSA□ CSA A□□□□□ □A□□□□□S□□□□□□ M□d□ r□□ □ □□□□ □□□□d S□r□□□d □ □□ M□□r□□□r□□□□□□ □ □□□A□□□□□□□ □□□□ □□ r□d□□□ □□d □r □□□ □□ C□□□d□□

□□ C□□□r□□□ □□□d□□ S□□□d□rd C□□ □ □□□□□□ □C□SC□

□□ C□□□r□□□ □□□d□□ C□d□□C□□□r□□ C□d□ □R□□□□□□□□□ □□□□ □□□

□□ □M A□r□□□□

□□ □M □□□□ □A□ □r□□□ □ □□□□□□S□□□d□rd □r E□□□□□□□□ □□□ S□ □□□d □ □d □ □□□R□□□□□□ □□ R□□□A□□□ □□□□ □ □□□ S□□□□ □ □□□□□□ □d□r □ □□□□□□ D□□r□□□□□r□□□r

□□ □r□d□ □□d□□ C□□ □ □□□□□ □□C

□□ □r□d□ □□d□□ C□d□□

□□ □r□d□ □r□d□□A□r□□□□

□□ E□□r□□□ □□□□□r□□□□□ A□□□□□ □E□A□ E□ER□ □ S□AR R□□□ S□□□□ □

□□ □□r□□□□□□□C□d□ C□□□□□□□CC□

□□ □□r□□□□□□R□d□□□□C□d□ □RC□

Fiberglass-Based Asphalt Shingles & Accessories

Guide Specifications

□□ □□□□r□□□□□□□□□□□d□□□ C□d□ □□□C□□

□□ □□□□r□□□□□□□C□d□ C□□□□□□E□□□□□□□□ S□r□□□□ □CC□ES□
□□ □CC□ES E□□□□□□□□ R□□□r□□□
□□ □CC□ES A□□□□□□□□□□ Cr□□□r□□□

□□ M□□□ □D□d□ C□□□□□ D□□□r□ □□□□□R□□□□□□r□ □□d E□□□□□ □R□□□r□□□ □RER□□r□d□□□C□□r□□
S□□□□□□M□□□ □D□d□ C□□□□□ □ □□□□ □□A□□□□□□□□□ □□ □A□□

M□ □ □□□□□□R□□□□□ C□□r□□□r□A□□□□□□□□ □□RCA□□

□□ S□□□□M□□□□□d A□r C□d□□□□□□ C□□r□□□r□ □ □□□□□A□□□□□□□□□□□□SMAC□A□– Ar□□□□□□r□□
S□□□□M□□□M□□□□□

□□ □□□□D□□□r□ □□□□□□□□r□□□ □□D□□ □r□d□□□□□□□

□□ □d□r□r□□r□ □□□r□□r□□ □□ □□□
□□ □□ □□ S□□d□rd □□□M□□□d□ □r □□ □□□R□□C□□r□□□
□□ □□ □□– □ □d R□□□□□□□ □□r□□□d R□□C□□r□□ M□□r□□□
□□ □□ □□□ □□ R□□□□□□□ □□r□□□d R□□C□□r□□ M□□r□□□
□□ □□ □□□ □□M□□d □r □ □d R□□□□□□A□□□S□□□□□ □ S□□d □□□
□□ □□ □□– □ □□□□□□□ □r R□□C□□r□□ S□□□□ □

□□ □d□r□r□□r□ □□□r□□r□□ E□□□□□□ S□r□□□ □ □ES□
□□ □ES E□□□□□□ R□□□r□□

R□ □S □r□□ □d□ C□□□□□□S□ □C□□□d□r□□ □ E□r□ □d E□r□□ □□□D□□□ □EED□

□□ RE□ □LA□R□ RE□ □REME□ □ A□D CER□□CA□ □

A□ □r□d□ □r□□□ □□□□ □□□ □d□r□r□□r□ □□□r□□r□□ □ □C□□A □r□ r□□□□□□□□□□

□□ □ □□□ □□□□□□□□ r□d□ □r□□□ □□□□ □□□□□□□□ □ □□□□□□□ □□□□□□ r EED □r□□□□□□□□
□□ S□□□□□□□□ S□□ r□d□– □□□□□□□d R□d□□□□□
□□ M□□r□□□ □d R□□□r□ r□d□– □d□□□ r□d□□D□□□□□r□ d □□ □□□□□□ □E□r□□ □□□□
□r□d□□D□□r□□□ □ □□□□□r r □□□□E□r□□ □□□□r□d□□D□□r□□□
□□ M□□r□□□ □d R□□□r□ r□d□– □□d□□ r□d□□D□□□□□r□ □d □ □□□ □□□□– S□r□□ □
R□ M□□r□□□
□□ M□□r□□□ □d R□□□r□ r□d□– C□□r□□□ d D□ □□□□□ □ □□□ M□□□□□ □□□

C□ □ □□□ □□□□□□□□ r□d□ □r□□□ □□□□ □□□□□□□□ E□ER□ □ S□AR □r□□□□□□□

D□ □□□□□□□□r□□□ r□d□□□ □ □□□rd□□□ □ □□ □□□d r□□□□□□□ □d □□□□□□d□□ □d

E□ A□□ r□ □□□□□□ □r□□ r□ □d □ □ □□□r □□□□□□□□□□ □□ □rr□□□ S□A □d□□□□□

□□□ □E □□ S□EC□□ER□D□□□□ □□r□□□d□
□□□ □R□D□C□ A□R□ □E□

A□ □ □□□ □□□□□□□□□□r□d□ □□□r□□□□□□□d □□□□□□□□□□□ □ □□ □r□□ □® □□□□□□□□□□ □ □□□□
□r□ r□□□r□□□□ □r□ **the nailing zone on the shingle's top surface.**

Fiberglass-Based Asphalt Shingles & Accessories

Guide Specifications

PART 1 – GENERAL

1.1 Section Includes

A. Supply and install roofing shingles and accessories as shown on the drawings and as specified herein.

1.2 Related Sections

Section numbers and titles are for reference only. Coordinate with other sections of the Contract Documents to determine applicable requirements for this section.

1.3 Quality Assurance

A. Comply with applicable requirements of the following standards:

1. ASTM D3462
2. ASTM D7158/D7158M – Standard Specification for Class H (120 mph) Wind Resistance
3. ASTM E108 Class A Fire Resistance

1.4 Reference Standards

A. Unless otherwise indicated, comply with the following standards:

1. Roofing Industry Committee on Weather Resistance (RICOWR) Publication #1 – Standard Practice for Preventing Water Intrusion in Roofing Systems
2. Asphalt Roofing Manufacturers Association (ARMA) Publication – Quality Control Guidelines for the Manufacture of Steep Slope Roofing Products

1.5 Submittals

1. Shingle Samples: Submit samples of each color and type of shingle specified.
2. Manufacturer's Instructions: Submit manufacturer's installation instructions and data sheets for each product specified.

PART 2 – PRODUCTS

2.1 Manufacturers

A. Subject to compliance with requirements, provide products by Owens Corning or approved equal.

2.2 Shingles

A. Laminated Fiberglass-Based Asphalt Shingles: Owens Corning TruDefinition® Duration® Shingles – Standard Specification for Class H (120 mph) Wind Resistance and Standard Specification for Class A Fire Resistance.

2.3 Accessories

A. Starter Strip: Manufacturer's standard self-adhering starter strip.
B. Hip and Ridge Shingles: Manufacturer's standard hip and ridge shingles.
C. Underlayment: Manufacturer's standard synthetic underlayment.
D. Ice and Water Protection: Manufacturer's standard self-adhering ice and water protection membrane.
E. Drip Edge: Manufacturer's standard metal drip edge profile, [color].

2.4 Fasteners

1. Corrosion-resistant roofing nails of sufficient length to penetrate roof sheathing.

PART 3 – EXECUTION

3.1 Examination

A. Verify that roof deck is dry, smooth, and free of debris before installation.

3.2 Installation

A. Install shingles in accordance with manufacturer's instructions and applicable code requirements.
B. Install starter strip along eaves and rakes.
C. Install underlayment and ice and water protection as required.
D. Install shingles with [number] nails per shingle, placed in the nailing zone.
E. Install hip and ridge shingles with [exposure].
F. Install drip edge at eaves and rakes.

3.3 Cleaning

A. Remove debris and excess materials from the roof and surrounding areas upon completion of work.

Fiberglass-Based Asphalt Shingles & Accessories

Guide Specifications

PART 1 GENERAL

1.1 A. Manufacturer's current published instructions and recommendations for installation of roofing system must be followed. Failure to install roofing system in accordance with manufacturer's instructions and recommendations may void manufacturer's warranty.

B. Manufacturer's warranties do not cover damage caused by improper installation, improper ventilation, inadequate decking, or failure to follow manufacturer's instructions. Owens Corning Roofing and Asphalt, LLC does not warrant roofing system installed over existing roofing system.

PART 2 SELECTION OF MATERIALS

2.1 A. Shingles: Provide Owens Corning Roofing and Asphalt, LLC shingles as specified and indicated.

B. Shingles: Provide Owens Corning Roofing and Asphalt, LLC shingles as specified and indicated.

PART 3 DELIVERY, STORAGE AND HANDLING

3.1 A. Deliver materials to site in manufacturer's unopened bundles with labels intact and legible.

B. Store materials protected from exposure to harmful weather conditions and at temperature and humidity conditions recommended by manufacturer.

C. Store materials protected from exposure to harmful weather conditions, at temperatures between 40°F and 80°F (4°C and 27°C).

D. Do not install damaged shingles; return damaged bundles to supplier.

E. Store and dispose of solvent-based materials in accordance with requirements of local authorities having jurisdiction.

F. Clean spills of asphalt coating from exposed surfaces.

PART 4 PROJECT CONDITIONS

4.1 A. Do not apply roofing system when temperature is below 40°F (4°C) unless special procedures are followed. Refer to Owens Corning Roofing and Asphalt, LLC cold weather application instructions.

PART 5 WARRANTY

5.1 A. Submit written warranty executed by Owens Corning Roofing and Asphalt, LLC, agreeing to repair or replace roofing system that fails in materials or workmanship within specified warranty period. Failures include, but are not limited to, manufacturing defects and wind damage resulting in blow-off of shingles. Roofing system includes shingles, underlayment, flashing, and other components of roofing system manufactured or supplied by Owens Corning Roofing and Asphalt, LLC. Refer to actual warranty for complete terms and conditions.

B. Manufacturer's Extended Limited Warranty: Submit written warranty executed by Owens Corning Roofing and Asphalt, LLC, agreeing to repair or replace roofing system that fails in materials or workmanship within specified warranty period. Failures include, but are not limited to, manufacturing defects and wind damage resulting in blow-off of shingles. Roofing system includes shingles, underlayment, flashing, and other components of roofing system manufactured or supplied by Owens Corning Roofing and Asphalt, LLC. Refer to actual warranty for complete terms and conditions.

PART 6 SELECTION OF MATERIALS

6.1 A. Owens Corning Starter: Provide Owens Corning Roofing and Asphalt, LLC starter shingles as specified and indicated or recommended by Owens Corning Roofing and Asphalt, LLC for use with roofing system specified and indicated.

B. Owens Corning Ridge Cap: Provide Owens Corning Roofing and Asphalt, LLC ridge cap shingles as specified and indicated or recommended by Owens Corning Roofing and Asphalt, LLC for use with roofing system specified and indicated.

Fiberglass-Based Asphalt Shingles & Accessories

Guide Specifications

[illegible]

PART [illegible] PRODUCTS

[illegible] MANUFACTURER[illegible]

A. [illegible]

B. [illegible]

[illegible] AVAILABLE [illegible]

[illegible]

[illegible]

A. [illegible]

1. [illegible] **the nailing zone on the shingle's top surface.**
2. [illegible]
3. [illegible]
4. [illegible]
5. [illegible]
6. [illegible]
7. Color: As selected from manufacturer's full range.
8. [illegible]

B. [illegible]

1. [illegible] **the nailing zone on the shingle's top surface.**
2. [illegible]
3. [illegible]
4. [illegible]
5. [illegible]
6. [illegible]
7. Color: As selected from manufacturer's full range.
8. [illegible]

C. [illegible]

1. [illegible] **the nailing zone on the shingle's top surface.**
2. [illegible]
3. [illegible]
4. [illegible]

Fiberglass-Based Asphalt Shingles & Accessories

Guide Specifications

□□ □□□d□□□ □□r S□□□r□□ □ □□□d□□□ □□□□ □□□□□□□□
□□ C□□□r□□□ □□r S□□□r□□ □□□□ □□ □□□□□□ □□ □ □□
□□ Color: As selected from manufacturer's full range.
□□ S□□d□rd□□□ □□□□□□□□□□□□AS□M D□□□□AS□M D□□□□ □□□□ □□□AS□M D□□□□ □C□□□ □ □ □d R□□□□□□□□□□AS□M D□□□□AS□M D□□□□ □C□□□ □ □ □d R□□□□□□□□□□AS□M E□□□□□ □ □□□ □C□□□ A □□r□ R□□□□□□□□□□ □□□□ □□□ E□ER□ □ S□AR□ r□□□r□□ □□□□ □r □□□□□□□□r r□□□□□□□□ □□□□□□ □□d □□□□r □□□d □□□r r□□□□□□□□ □□□□□□□□□□ C□□□r□□ □ □d□□ E□r□□ E□□□□□□□ S□□d□rd□□□ □□□□□ r□□ r□□□r□□ □□□□□□□□d □□ □□□ C□□□R□□□R□□□□ C□□□□□□CRRC□□ □□r□d□ □r□d□□□A□□r□□□□□CC□ES AC□□□□□□d □□ER□□□□□□□

D□ □r□D□□□□□□□□□□ D□r□□□□□ □A□□□□ R□□□□□□□□□S□□□□□□□□ A□ □ □□□□□□□□r□d □□□ □ □ □□□□ C□r□□□□ R□□□□□□ □□d A□□□□□□□□□C□

□□ □r□d□□□□**A□r**□□□□□□□□□□□□**d**□□□ □□**r**□□ □□□® □□□□□□□□□□□□□□□ □ □□□□□ □□□□**r**□□ **r**□□□□□**r**□□□□ □□**r**□□ □□ **the nailing zone on the shingle's top surface.**

□□ □ □□□ □□□□□S□□□□□ □□□□□□□□ □□ □□□□□ □ □ □□□□ □□□□□□□□ □□ □□□□□□□ □ □ □□
□□ E□□□□□□r□□ □□□□□□ □□ □□□□□ □ □ □□
□□ S□□□□□□□□ □□r S□□□r□□ □□□□
□□ □□□d□□□ □□r S□□□r□□ □ □□□d□□□ □□□□□□ □r □□□ □□□□□□□□□□
□□ C□□□r□□□ □□r S□□□r□□ □□□□ □□ □□□□□□□ □□□ □ □□
□□ Color: As selected from manufacturer's full range.
□□ S□□d□rd□□□ □□□□□□□□□□□□AS□M D□□□□AS□M D□□□□ □□□□ □□□AS□M D□□□□ □C□□□ □ □ □d R□□□□□□□□□□AS□M D□□□□AS□M D□□□□ □C□□□ □ □ □d R□□□□□□□□□□AS□M E□□□□□ □ □□□ □C□□□ A □□r□ R□□□□□□□□□□ CSA A□□□□□□□□□□r□d□ □r□d□□□A□□r□□□□□M□□□ □□D□d□ C□□□□□□ □r□d□□□ A□□r□□□□□CC□ES AC□□□□□□d □□ER□□□□□□□

E□ □r□D□□□□□□□□□□ D□r□□□□□ □□ □□ A□□□□□ R□□□□□□□□□S□□□□□□□□ A□ □ □□□□□□□□r□d □□□ □ □ □□□□ C□r□□□□ R□□□□□□ □□d A□□□□□□□□□C□

□□ □r□d□□□□**A□r**□□□□□□□□□□□□**d**□□□ □□**r**□□ □□□® □□□□□□□□□□□□□□□ □ □□□□□ □□□□**r**□□ **r**□□□□□**r**□□□□ □□**r**□□ □□ **the nailing zone on the shingle's top surface.**

□□ □ □□□ □□□□□S□□□□□ □□□□□□□□ □□ □□□□□ □ □ □□□□ □□□□□□□□ □□ □□□□□□□ □ □ □□
□□ E□□□□□□r□□ □□□□□□ □□ □□□□□ □ □ □□
□□ S□□□□□□□□ □□r S□□□r□□ □□□□
□□ □□□d□□□ □□r S□□□r□□ □ □□□d□□□ □□□□□□ □r □□□ □□□□□□□□□□
□□ C□□□r□□□ □□r S□□□r□□ □□□□ □□ □□□□□□□ □□□ □ □□
□□ Color: As selected from manufacturer's full range.
□□ S□□d□rd□□□ □□□□□□□□□□□□AS□M D□□□□AS□M D□□□□ □□□□ □□□AS□M D□□□□ □C□□□ □ □ □d R□□□□□□□□□□AS□M D□□□□AS□M D□□□□ □C□□□ □ □ □d R□□□□□□□□□□AS□M E□□□□□ □ □□□ □C□□□ A □□r□ R□□□□□□□□□□ CSA A□□□□□□□□□□r□d□ □r□d□□□A□□r□□□□□M□□□ □□D□d□ C□□□□□□ □r□d□□□ A□□r□□□□□CC□ES AC□□□□□□d □□ER□□□□□□□

□□ □r□D□□□□□□□□□□ D□r□□□□□ C□□□□ A□□□□□ R□□□□□□□□□S□□□□□□□□ A□ □ □□□□□□□□r□d □□□ □ □ □□□□ C□r□□□□ R□□□□□□ □□d A□□□□□□□□□C□

□□ □r□d□□□□**A□r**□□□□□□□□□□□□**d**□□□ □□**r**□□ □□□® □□□□□□□□□□□□□□□ □ □□□□□ □□□□**r**□□ **r**□□□□□**r**□□□□ □□**r**□□ □□ **the nailing zone on the shingle's top surface.**

□□ □ □□□ □□□□□S□□□□□ □□□□□□□□ □□ □□□□□ □ □ □□□□ □□□□□□□□ □□ □□□□□□□ □ □ □□
□□ E□□□□□□r□□ □□□□□□ □□ □□□□□ □ □ □□
□□ S□□□□□□□□ □□r S□□□r□□ □□□□
□□ □□□d□□□ □□r S□□□r□□ □ □□□d□□□ □□□□□□ □r □□□ □□□□□□□□□□
□□ C□□□r□□□ □□r S□□□r□□ □□□□ □□ □□□□□□□ □□□ □ □□
□□ Color: As selected from manufacturer's full range.
□□ S□□d□rd□□□ □□□□□□□□□□□□AS□M D□□□□AS□M D□□□□ □□□□ □□□AS□M D□□□□ □C□□□ □ □ □d R□□□□□□□□□□AS□M D□□□□AS□M D□□□□ □C□□□ □ □ □d R□□□□□□□□□□AS□M E□□□□□ □ □□□ □C□□□ A □□r□ R□□□□□□□□□□ □□□ □□□ C□□□R□□□R□□□□ C□□□□□□CRRC□□ □□r□d□ □r□d□□□A□□r□□□□□M□□□ □□D□d□ C□□□□□□ □r□d□□□ A□□r□□□□□CC□ES AC□□□□□□d □□ER□□□□□□□

Fiberglass-Based Asphalt Shingles & Accessories

Guide Specifications

[illegible]

- [illegible] the nailing zone on the shingle's top surface.
- [illegible]
- [illegible]
- [illegible]
- [illegible]
- [illegible]
- Color: As selected from manufacturer's full range.
- [illegible]

[illegible]

- [illegible] the nailing zone on the shingle's top surface.
- [illegible]
- [illegible]
- [illegible]
- [illegible]
- [illegible]
- Color: As selected from manufacturer's full ra[illegible]
- [illegible]

[illegible]

- [illegible] zone on the shingle's top surface.
- [illegible]
- [illegible]
- [illegible]
- [illegible]
- [illegible]
- [illegible] selected from manufacturer's full range[illegible]
- [illegible]

[illegible]

- [illegible] the nailing zone on the shingle's top surface.
- [illegible]
- [illegible]
- [illegible]
- [illegible]
- [illegible]
- Color: As selected from manufacturer's full range.

Fiberglass-Based Asphalt Shingles & Accessories

Guide Specifications

[illegible] S[illegible]d[illegible]rd[illegible] [illegible]AS[illegible]M D[illegible]AS[illegible]M D[illegible] [illegible]AS[illegible]M D[illegible] [illegible]C[illegible] [illegible] [illegible]d R[illegible]AS[illegible]M D[illegible]AS[illegible]M D[illegible] [illegible]C[illegible] [illegible] [illegible]d R[illegible]AS[illegible]M E[illegible] [illegible] [illegible]C[illegible]A [illegible]r[illegible] R[illegible] [illegible] [illegible]C[illegible] [illegible] [illegible]R[illegible]CSA A[illegible]CC[illegible]ES AC[illegible] [illegible]d [illegible] ER[illegible]

[illegible] [illegible]r[illegible]D[illegible] [illegible]rd[illegible] [illegible]A[illegible] R[illegible]S[illegible] A[illegible] [illegible]r[illegible]d [illegible] C[illegible]r[illegible] R[illegible] [illegible]d A[illegible]C[illegible]

[illegible] [illegible]S[illegible] [illegible] [illegible] [illegible] [illegible] [illegible] [illegible] [illegible] [illegible] [illegible]

[illegible] E[illegible]r[illegible] [illegible] [illegible] [illegible] [illegible] [illegible]

[illegible] S[illegible] [illegible]r S[illegible]r[illegible]

[illegible] [illegible]d[illegible] [illegible]r S[illegible]r[illegible]

[illegible] C[illegible]r[illegible] [illegible]r S[illegible]r[illegible] [illegible] [illegible] [illegible] [illegible] [illegible]

[illegible] C[illegible]r[illegible]A[illegible] [illegible]d [illegible]r[illegible] [illegible] [illegible]r[illegible]r[illegible]

[illegible] S[illegible]d[illegible]rd[illegible] [illegible]AS[illegible]M D[illegible]AS[illegible]M D[illegible] [illegible]AS[illegible]M D[illegible] [illegible]C[illegible] [illegible] [illegible]d R[illegible]AS[illegible]M D[illegible]AS[illegible]M D[illegible] [illegible]C[illegible] [illegible] [illegible]d R[illegible]AS[illegible]M E[illegible] [illegible] [illegible]C[illegible]A [illegible]r[illegible] R[illegible]rd[illegible] [illegible]r[illegible]d[illegible]A[illegible]r[illegible]M[illegible] [illegible]D[illegible]d[illegible] C[illegible] [illegible]r[illegible]d[illegible]A[illegible]r[illegible]

[illegible] [illegible]r[illegible]D[illegible] [illegible] [illegible]r[illegible] [illegible]rd[illegible] [illegible]A[illegible] R[illegible]S[illegible] A[illegible] [illegible]r[illegible]d [illegible] C[illegible]r[illegible] R[illegible] [illegible]d A[illegible]C[illegible]

[illegible] [illegible]S[illegible] [illegible] [illegible] [illegible] [illegible] [illegible] [illegible] [illegible] [illegible] [illegible]

[illegible] E[illegible]r[illegible] [illegible] [illegible] [illegible] [illegible] [illegible]

[illegible] S[illegible] [illegible]r S[illegible]r[illegible]

[illegible] [illegible]d[illegible] [illegible]r S[illegible]r[illegible]

[illegible] C[illegible]r[illegible] [illegible]r S[illegible]r[illegible] [illegible] [illegible] [illegible] [illegible] [illegible]

[illegible] C[illegible]r[illegible]A[illegible] [illegible]d [illegible]rom manufacturer's full range.

[illegible] S[illegible]d[illegible]rd[illegible] [illegible]AS[illegible]M D[illegible]AS[illegible]M D[illegible] [illegible]AS[illegible]M D[illegible] [illegible]C[illegible] [illegible] [illegible]d R[illegible]AS[illegible]M D[illegible]AS[illegible]M D[illegible] [illegible]C[illegible] [illegible] [illegible]d R[illegible]AS[illegible]M E[illegible] [illegible] [illegible]C[illegible]A [illegible]r[illegible] R[illegible] [illegible] [illegible]C[illegible] [illegible] [illegible]R[illegible]CC[illegible]ES AC[illegible]d [illegible] ER[illegible]

M[illegible] [illegible]rd[illegible] [illegible]A[illegible] R[illegible]S[illegible] A[illegible] [illegible]r[illegible]d [illegible] C[illegible]r[illegible] R[illegible] [illegible]d A[illegible] [illegible]C[illegible]

[illegible] [illegible]S[illegible] [illegible] [illegible] [illegible] [illegible] [illegible] [illegible] [illegible] [illegible] [illegible]

[illegible] E[illegible]r[illegible] [illegible] [illegible] [illegible] [illegible] [illegible]

[illegible] S[illegible] [illegible]r S[illegible]r[illegible] [illegible]

[illegible] [illegible]d[illegible] [illegible]r S[illegible]r[illegible] [illegible]d[illegible] [illegible] [illegible]r [illegible] [illegible]

[illegible] C[illegible]r[illegible] [illegible]r S[illegible]r[illegible] [illegible] [illegible] [illegible] [illegible] [illegible]

[illegible] Color: As selected from manufacturer's full range.

[illegible] S[illegible]d[illegible]rd[illegible] [illegible]AS[illegible]M D[illegible]AS[illegible]M D[illegible] [illegible]AS[illegible]M D[illegible] [illegible]C[illegible] [illegible] [illegible]d R[illegible]AS[illegible]M D[illegible]AS[illegible]M D[illegible] [illegible]C[illegible] [illegible] [illegible]d R[illegible]AS[illegible]M E[illegible] [illegible] [illegible]C[illegible]A [illegible]r[illegible] R[illegible]rd[illegible] [illegible]r[illegible]d[illegible]A[illegible]r[illegible]M[illegible] [illegible]D[illegible]d[illegible] C[illegible] [illegible]r[illegible]d[illegible]A[illegible]r[illegible] CSA A[illegible]CC[illegible]ES AC[illegible]d [illegible] ER[illegible]S[illegible] [illegible] [illegible] C[illegible]r [illegible] E[illegible]ER[illegible] S[illegible]AR r[illegible]r[illegible] [illegible] [illegible]r [illegible]r r[illegible] [illegible] [illegible]d [illegible]r [illegible]d [illegible]r r[illegible] [illegible]

[illegible] [illegible]rd[illegible] [illegible]A[illegible] R[illegible]S[illegible] A[illegible] [illegible]r[illegible]d [illegible] C[illegible]r[illegible] R[illegible] [illegible]d A[illegible]C[illegible]

[illegible] [illegible]S[illegible] [illegible] [illegible] [illegible] [illegible] [illegible] [illegible] [illegible] [illegible] [illegible]

[illegible] E[illegible]r[illegible] [illegible] [illegible] [illegible] [illegible] [illegible]

[illegible] S[illegible] [illegible]r S[illegible]r[illegible] [illegible]

[illegible] [illegible]d[illegible] [illegible]r S[illegible]r[illegible] [illegible]d[illegible] [illegible] [illegible]r [illegible] [illegible]

[illegible] C[illegible]r[illegible] [illegible]r S[illegible]r[illegible] [illegible] [illegible] [illegible] [illegible] [illegible]

[illegible] Color: As selected from manufacturer's full range.

[illegible] S[illegible]d[illegible]rd[illegible] [illegible]AS[illegible]M D[illegible]AS[illegible]M D[illegible] [illegible]AS[illegible]M D[illegible] [illegible]C[illegible] [illegible] [illegible]d R[illegible]AS[illegible]M D[illegible]AS[illegible]M D[illegible] [illegible]C[illegible] [illegible] [illegible]d R[illegible]AS[illegible]M E[illegible] [illegible] [illegible]C[illegible]A [illegible]r[illegible] R[illegible]CSA A[illegible]CC[illegible]ES AC[illegible] ER[illegible]rd[illegible] [illegible]r[illegible]d[illegible] A[illegible]r[illegible]d M[illegible] [illegible]D[illegible]d[illegible] C[illegible] [illegible]r[illegible]d[illegible]A[illegible]r[illegible]S[illegible] [illegible] [illegible] C[illegible]r [illegible] E[illegible]ER[illegible]

Fiberglass-Based Asphalt Shingles & Accessories

Guide Specifications

[illegible]

[illegible]

[illegible]

[illegible]

[illegible]

[illegible]

[illegible]

Color: As selected from manufacturer's full range.

[illegible]

[illegible]

[illegible]

[illegible]

[illegible]

[illegible]

[illegible]

[illegible]

Color: As selected from manufacturer's full range.

[illegible]

[illegible]

[illegible]

[illegible]

[illegible]

[illegible]

[illegible]

Color: As selected from manufacturer's full range.

[illegible]

[illegible]

[illegible]

[illegible]

[illegible]

[illegible]

[illegible]

Color: As selected from manufacturer's full range.

[illegible]

Fiberglass-Based Asphalt Shingles & Accessories

Guide Specifications

S□ S□r□□ □□ A□□□□ R□□□□□□□□□S□□□□□□□□ A□ □ □□□□□□□□r□d □□ □ □ □□□□ C□r□□□□ R□□□□□□ □□d A□□□□□□□□□C□
□□ □□□ □□□□S□□□□ □□□ □□ □□□□□ □ □ □□□□ □□□ □□ □□□□□ □ □ □□
□□ E□□□□□r□□ □ □□ □□□□□ □ □ □□
□□ S□□□□□□□ □□r S□□□r□□ □□□□
□□ □□□d□□□ □□r S□□□r□□ □ □□□d□□□ □□□□□□□□□□□□ □□□□□□□□□
□□ C□□□r□□□□ □□r S□□□r□□ □□□□□□ □□□ □□□□□□ □□□ □ □□
□□ Color: As selected from manufacturer's full range.
□□ S□□□d□rd□□□ □□□□□□□□□□□□□□AS□M D□□□□AS□M D□□□□ □□□□□ □□□AS□M D□□□□ □C□□□□ □ □ □d R□□□□□□□□□□□AS□M D□□□□AS□M D□□□□ □C□□□□ □ □ □d R□□□□□□□□□□AS□M E□□□□□ □ □□□ □C□□□A □□r□ R□□□□□□□□□□CCRES AC□□□□□ □ ER□□□□□□□□□□r□d □ r□d □□□A□□r□□□□□d M□□□ □D□d □ C□□□□ □r□d □□□A□r□□□

□□ S□□r□□ □□ □□□ A□□□□ R□□□□□□□□□S□□□□□□□□ A□ □ □□□□□□□□r□d □□ □ □ □□□□ C□r□□□□ R□□□□□□ □□d A□□□□□□□□ □□C□
□□ □□□ □□□□S□□□□ □□□ □□ □□□□□ □ □ □□□□ □□□ □□ □□□□□ □ □ □□
□□ E□□□□□r□□ □ □□ □□□□□ □ □ □□
□□ S□□□□□□□ □□r S□□□r□□ □□□□
□□ □□□d□□□ □□r S□□□r□□ □ □□□d□□□ □□□□□□□□□□□□ □□□□□□□□□
□□ C□□□r□□□□ □□r S□□□r□□ □□□□□□ □□□ □□□□□□ □□□ □ □□
□□ Color: As selected from manufacturer's full ra□□□□
□□ S□□□d□rd□□□ □□□□□□□□□□□□□□AS□M D□□□□AS□M D□□□□ □□□□□ □□□AS□M D□□□□ □C□□□□ □ □ □d R□□□□□□□□□□□AS□M D□□□□AS□M D□□□□ □C□□□□ □ □ □d R□□□□□□□□□□AS□M E□□□□□ □ □□□ □C□□□A □□r□ R□□□□□□□□□□CCRES AC□□□□□ □ ER□□□□□□□□□□d □□r□d □ r□d□□□A□□r□□□□□

□□ S□□r□□ □□ □A□□□□ R□□□□□□□□□M□r□□□ S□□□□□□□□ A□ □ □□□□□□□□r□d □□ □ □ □□□□ C□r□□□□ R□□□□□□ □□d A□□□□□□□□□C□
□□ □□□ □□□□S□□□□ □□□□□□□ □□□ □□□□□ □ □ □□□□ □□□□□□□ □□□ □□□□□ □ □ □□
□□ E□□□□□r□□ □□□□□□ □□□ □□□□□ □ □ □□
□□ S□□□□□□□ □□r S□□□r□□ □□□□
□□ □□□d□□□ □□r S□□□r□□ □ □□□d□□□ □□□□□□□□□□□□ □□□□□□□□□
□□ C□□□r□□□□ □□r S□□□r□□ □□□□□□ □□□ □□□□□□ □□□ □ □□
□□ Color: As selected from manufacturer's full range.
□□ S□□□d□rd□□□ □□□□□□□□□□□□□□AS□M D□□□□AS□M D□□□□ □□□□□ □□□AS□M D□□□□ □C□□□□ □ □ □d R□□□□□□□□□□□AS□M D□□□□AS□M D□□□□ □C□□□□ □ □ □d R□□□□□□□□□□AS□M E□□□□□ □ □□□ □C□□□A □□r□ R□□□□□□□□□□CSA A□□□□□□□□CCES AC□□□□□□□d □□ER□□□□□□□□

□□ S□□r□□ □□ □□□ A□□□□ R□□□□□□□□□M□r□□□ S□□□□□□□□ A□ □ □□□□□□□□r□d □□ □ □ □□□□ C□r□□□□ R□□□□□□ □□d A□□□□□□□□□C□
□□ □□□ □□□□S□□□□ □□□□□□□ □□□ □□□□□ □ □ □□□□ □□□□□□□ □□□ □□□□□ □ □ □□
□□ E□□□□□r□□ □□□□□□ □□□ □□□□□ □ □ □□
□□ S□□□□□□□ □□r S□□□r□□ □□□□
□□ □□□d□□□ □□r S□□□r□□ □ □□□d□□□ □□□□□□□□□□□□ □□□□□□□□□
□□ C□□□r□□□□ □□r S□□□r□□ □□□□□□ □□□ □□□□□□ □□□ □ □□
□□ Color: As selected from manufacturer's full range.
□□ S□□□d□rd□□□ □□□□□□□□□□□□□□AS□M D□□□□AS□M D□□□□ □□□□□ □□□AS□M D□□□□ □C□□□□ □ □ □d R□□□□□□□□□□□AS□M D□□□□AS□M D□□□□ □C□□□□ □ □ □d R□□□□□□□□□□AS□M E□□□□□ □ □□□ □C□□□A □□r□ R□□□□□□□□□□CCRES AC□□□□□□□d □□ER□□□□□□□□

□ □ C□□□□□□□□ □□ □□□ A□□□□ R□□□□□□□□□S□□□□□□□□ A□ □ □□□□□□□□r□d □□ □ □ □□□□ C□r□□□□ R□□□□□□ □□d A□□□□□□□□ □□C□
□□ □□□ □□□□S□□□□ □□□ □□ □□□□□ □ □ □□□□ □□□ □□ □□□□□ □ □ □□
□□ E□□□□□r□□ □ □□ □□□□□ □ □ □□
□□ S□□□□□□□ □□r S□□□r□□ □□□□
□□ □□□d□□□ □□r S□□□r□□ □ □□□d□□□ □□□□□□□□□□□□ □□□□□□□□□
□□ C□□□r□□□□ □□r S□□□r□□ □□□□□□ □□□ □□□□□□ □□□ □ □□

[illegible] C[illegible]r[illegible]A[illegible] selected from manufacturer's full range.

[illegible] S[illegible]d[illegible]rd[illegible] AS[illegible]M D[illegible] AS[illegible]M D[illegible] AS[illegible]M D[illegible] C[illegible]d R[illegible] AS[illegible]M D[illegible] AS[illegible]M D[illegible] C[illegible]d R[illegible] AS[illegible]M E[illegible] C[illegible]A [illegible]r[illegible] R[illegible] CC[illegible]ES AC[illegible] ER[illegible]d [illegible]r[illegible]d [illegible]r[illegible]d [illegible]A[illegible]r[illegible]

[illegible] M[illegible]r[illegible]S[illegible]r[illegible] R[illegible] A[illegible] R[illegible] A[illegible]r[illegible]d [illegible] C[illegible]r[illegible] R[illegible] [illegible]d A[illegible] C[illegible]

[illegible] S[illegible]

[illegible] E[illegible]r[illegible]

[illegible] R[illegible]r S[illegible]r[illegible]

[illegible] C[illegible]r[illegible]r S[illegible]r[illegible]

[illegible] S[illegible]d[illegible]rd[illegible] AS[illegible]M E[illegible] C[illegible]C [illegible]r[illegible] R[illegible]d [illegible]r[illegible]d [illegible]r[illegible]d A[illegible]r[illegible]

[illegible] A[illegible]D R[illegible]D[illegible]E [illegible]LE[illegible]

[illegible]r[illegible]d[illegible]d r[illegible]d[illegible]r [illegible]r[illegible]d [illegible]d [illegible]r[illegible]

[illegible]E [illegible] S[illegible]EC[illegible]ER[illegible]D[illegible]d r[illegible]d[illegible] [illegible]r[illegible]d[illegible]r[illegible] [illegible]r[illegible]r[illegible]d[illegible]

[illegible]E [illegible] S[illegible]EC[illegible]ER[illegible]r[illegible]r r[illegible]r[illegible]d[illegible]

A[illegible] D[illegible]r[illegible]R[illegible]d[illegible] [illegible]d R[illegible]d[illegible] A[illegible] R[illegible]S[illegible] S[illegible]A[illegible]r[illegible]d C[illegible]r[illegible] R[illegible]d A[illegible]C[illegible]

[illegible] [illegible]r[illegible]d[illegible]r[illegible]d [illegible]r[illegible] [illegible]r[illegible]d[illegible] d[illegible]r[illegible]d d[illegible]

[illegible] Nominal Size: 12 in (305 mm) by 10 ⅝ in (270 mm) with 8 in (203 mm) exposure

[illegible] S[illegible]d[illegible]rd[illegible] AS[illegible]M D[illegible] AS[illegible]M D[illegible] C[illegible]d R[illegible] AS[illegible]M D[illegible] AS[illegible]M E[illegible] C[illegible]A [illegible]r[illegible] R[illegible] CC[illegible]ES AC[illegible] ER[illegible]r[illegible]d [illegible]r[illegible]d A[illegible]r[illegible] M[illegible]D[illegible]d[illegible] C[illegible]r[illegible]d A[illegible]r[illegible]d CSA A[illegible]

[illegible] LongRidge™ Extended Hip & Ridge (Algae Resistant[illegible]S[illegible] S[illegible]A[illegible]r[illegible]d [illegible] C[illegible]r[illegible] R[illegible] A[illegible]C[illegible]

[illegible] Extended 10" exposure provides an attractive, clean and consistent roof line for enhanced curb [illegible]

[illegible] S[illegible]r[illegible]

[illegible] S[illegible]

[illegible] S[illegible]d[illegible]rd[illegible] AS[illegible]M D[illegible] AS[illegible]M D[illegible] C[illegible]d R[illegible] AS[illegible]M D[illegible] AS[illegible]M E[illegible] C[illegible]A [illegible]r[illegible] R[illegible] CC[illegible]ES AC[illegible] ER[illegible]

C[illegible] R[illegible]ER[illegible]d[illegible] [illegible]d R[illegible]d[illegible] A[illegible] R[illegible]S[illegible] S[illegible]A[illegible]r[illegible]d C[illegible]r[illegible] R[illegible]d A[illegible]C[illegible]

[illegible]d[illegible]d[illegible]r[illegible]d[illegible]r[illegible]d d[illegible]d r[illegible]d[illegible]

[illegible] S[illegible]r[illegible]

[illegible] S[illegible]

[illegible] S[illegible]d[illegible]rd[illegible] AS[illegible]M D[illegible] AS[illegible]M D[illegible] C[illegible]d R[illegible] AS[illegible]M D[illegible] AS[illegible]M E[illegible] C[illegible]A [illegible]r[illegible] R[illegible] CC[illegible]ES AC[illegible] ER[illegible]d [illegible]r[illegible]d [illegible]r[illegible]d A[illegible]r[illegible]

D[illegible] D[illegible]R[illegible]d[illegible] [illegible]d R[illegible]d[illegible] A[illegible] R[illegible]S[illegible] S[illegible]

[illegible] D[illegible]r[illegible]r[illegible] S[illegible]S[illegible]d[illegible]d [illegible]r[illegible]d[illegible] d[illegible]d [illegible]d r[illegible]d[illegible]

[illegible] S[illegible]d [illegible]r[illegible]

[illegible] S[illegible]d[illegible]rd[illegible] AS[illegible]M D[illegible] AS[illegible]M D[illegible] C[illegible]d R[illegible] AS[illegible]M D[illegible] AS[illegible]M E[illegible] C[illegible]A [illegible]r[illegible] R[illegible]d CSA A[illegible]

Fiberglass-Based Asphalt Shingles & Accessories

Guide Specifications

E. [illegible]

F. [illegible]

G. [illegible]

H. [illegible]

I. [illegible]

J. [illegible]

Fiberglass-Based Asphalt Shingles & Accessories

Guide Specifications

PART 1 – GENERAL

NOTE TO SPECIFIER: Delete items not applicable to project. Coordinate with other specification sections as required.
NOTE TO SPECIFIER: Select appropriate shingle and accessory products for project conditions.

1.1 Summary
A. Section Includes: Asphalt roofing shingles, underlayment, and accessories.
1. Related Sections: Section [_____] – Roof Insulation.
2. Related Sections: Section [_____] – Sheet Metal Flashing and Trim.

1.2 Summary
A. Section Includes: Asphalt roofing shingles, underlayment, and accessories.
1. Provide shingles that comply with ASTM D7158 Class H, ASTM D3462, ASTM D3018 Type I, and ASTM E108 Class A and UL 790 Class A.
2. Related Sections: Section [_____] – Roof Insulation.

1.3 Summary
A. Section Includes: Asphalt roofing shingles, underlayment, and accessories.
1. Provide shingles that comply with ASTM D7158 Class H, ASTM D3462, ASTM D3018 Type I, and ASTM E108 Class A and UL 790 Class A and CCMC 13064 and ULC S107 Class A.
2. Related Sections: Section [_____] – Roof Insulation.

1.4 Summary
A. Section Includes: Asphalt roofing shingles, underlayment, and accessories.
1. Provide shingles that comply with ASTM D7158 Class H, ASTM D3462, ASTM D3018 Type I, and ASTM E108 Class A and UL 790 Class A and CCMC 13064 and ULC S107 Class A and Miami-Dade County Product Control Approval.
2. Related Sections: Section [_____] – Roof Insulation.

PART 2 – PRODUCTS

NOTE TO SPECIFIER: Delete items not applicable to project. Coordinate with other specification sections as required.
NOTE TO SPECIFIER: Select appropriate shingle and accessory products for project conditions.

2.1 Summary
A. Section Includes: Asphalt roofing shingles, underlayment, and accessories.
1. Manufacturer: Owens Corning Roofing and Asphalt, LLC.
2. Related Sections: Section [_____] – Roof Insulation.
3. Related Sections: Section [_____] – Sheet Metal Flashing and Trim.
4. Provide shingles that comply with ASTM D7158 Class H, ASTM E108 Class A and UL 790 Class A and CCMC 13064 and ULC S107 Class A and Miami-Dade County Product Control Approval.

2.2 Summary
A. Section Includes: [_____] Asphalt roofing shingles, underlayment, and accessories.
1. Manufacturer: Owens Corning Roofing and Asphalt, LLC.
2. Related Sections: Section [_____] – Roof Insulation.
3. Related Sections: Section [_____] – Sheet Metal Flashing and Trim.
4. Provide shingles that comply with ASTM D7158 Class H, ASTM E108 Class A and UL 790 Class A and CCMC 13064 and ULC S107 Class A and Miami-Dade County Product Control Approval.
5. Provide shingles that comply with [_____].

2.3 Summary
A. Section Includes: [_____] Asphalt roofing shingles, underlayment, and accessories.
1. Manufacturer: Owens Corning Roofing and Asphalt, LLC.
2. Related Sections: Section [_____] – Roof Insulation.
3. Related Sections: Section [_____] – Sheet Metal Flashing and Trim.
4. Provide shingles that comply with ASTM D7158 Class H, ASTM E108 Class A and UL 790 Class A and CCMC 13064 and ULC S107 Class A and Miami-Dade County Product Control Approval.
5. Provide shingles that comply with [_____].

PART 3 – EXECUTION

NOTE TO SPECIFIER: Delete items not applicable to project. Coordinate with other specification sections as required.
NOTE TO SPECIFIER: Select appropriate shingle and accessory products for project conditions.

3.1 Summary
A. Section Includes: Asphalt roofing shingles, underlayment, and accessories.
1. Manufacturer: Owens Corning Roofing and Asphalt, LLC.
2. Related Sections: Section [_____] – Roof Insulation.
3. Related Sections: Section [_____] – Sheet Metal Flashing and Trim.
4. Provide shingles that comply with ASTM D7158 Class H, ASTM E108 Class A and UL 790 Class A and CCMC 13064 and ULC S107 Class A and Miami-Dade County Product Control Approval.

3.2 Summary
A. Section Includes: [_____] Asphalt roofing shingles, underlayment, and accessories.
1. Manufacturer: Owens Corning Roofing and Asphalt, LLC.
2. Related Sections: Section [_____] – Roof Insulation.
3. Related Sections: Section [_____] – Sheet Metal Flashing and Trim.
4. Provide shingles that comply with ASTM D7158 Class H, ASTM E108 Class A and UL 790 Class A and CCMC 13064 and ULC S107 Class A and Miami-Dade County Product Control Approval.

3.3 Summary
A. Section Includes: [_____] Asphalt roofing shingles, underlayment, and accessories.
1. Manufacturer: Owens Corning Roofing and Asphalt, LLC.
2. Related Sections: Section [_____] – Roof Insulation.
3. Related Sections: Section [_____] – Sheet Metal Flashing and Trim.
4. Provide shingles that comply with ASTM D7158 Class H, ASTM E108 Class A and UL 790 Class A and CCMC 13064 and ULC S107 Class A and Miami-Dade County Product Control Approval.

Fiberglass-Based Asphalt Shingles & Accessories

Guide Specifications

D. [illegible]

E. [illegible]

MEC[illegible]A[illegible]CALL[illegible] [illegible]A[illegible]E[illegible]ED [illegible]DERLA[illegible]ME[illegible]

A. [illegible]

[illegible]

C. [illegible]

Fiberglass-Based Asphalt Shingles & Accessories

Guide Specifications

[illegible] **L[illegible] [illegible]L[illegible]E M[illegible]D[illegible]ED [illegible]ME[illegible] R[illegible] [illegible]EM[illegible]** [illegible]

[illegible]E [illegible] S[illegible]EC[illegible]ER[illegible]D[illegible] [illegible]

[illegible]E [illegible] S[illegible]EC[illegible]ER[illegible] [illegible]

A. D[illegible]S[illegible]R[illegible] S[illegible]

1. A [illegible] S[illegible]S [illegible]
2. A D[illegible]C[illegible] [illegible]
3. [illegible]
4. [illegible] D[illegible]S[illegible]™ S[illegible] [illegible]
5. [illegible] D[illegible]S[illegible]™ [illegible]
   1. DeckSeal™ SBS SA Cap Sheet [illegible]
   2. DeckSeal™ SBS SA [illegible] S[illegible]A [illegible]
   3. DeckSeal™ MA Nailbase [illegible] A [illegible]
6. A[illegible]
7. R[illegible]D[illegible]
   1. [illegible] – C[illegible]
   2. [illegible] – [illegible]
8. S[illegible]d[illegible]rd[illegible] AS[illegible]M E[illegible] AS[illegible]M D[illegible] AS[illegible]M D[illegible] M[illegible] D[illegible] A[illegible]

C[illegible] A[illegible] C [illegible] C[illegible] C[illegible] D[illegible]

C[illegible] D[illegible]S[illegible]™ [illegible]

[illegible] **R[illegible]E[illegible]LA[illegible]**

[illegible]E [illegible] S[illegible]EC[illegible]ER[illegible]D[illegible] [illegible]

[illegible]E [illegible] S[illegible]EC[illegible]ER[illegible] [illegible]

A. [illegible]S[illegible]r[illegible] R[illegible]d[illegible]C[illegible] R[illegible]d R[illegible]d[illegible]

1. S[illegible]
2. [illegible] A [illegible]
3. A[illegible]
4. S[illegible]
5. S[illegible]d[illegible]rd[illegible] D[illegible]r[illegible] R[illegible] CC[illegible]ES AC[illegible] ER[illegible] A[illegible]

B. [illegible]S[illegible]r[illegible] R[illegible]d R[illegible]R[illegible]d[illegible] R[illegible] M[illegible]

1. S[illegible] R[illegible] M[illegible]
2. [illegible] A [illegible]
3. A[illegible]
4. S[illegible]

Fiberglass-Based Asphalt Shingles & Accessories

Guide Specifications

[illegible]

C. [illegible]

[illegible]

D. [illegible]

[illegible]

E. [illegible]

[illegible]

[illegible]

[illegible]

[illegible]

[illegible]

Fiberglass-Based Asphalt Shingles & Accessories

Guide Specifications

[illegible]

Fiberglass-Based Asphalt Shingles & Accessories

Guide Specifications

[illegible]

Fiberglass-Based Asphalt Shingles & Accessories

Guide Specifications

[illegible]

Fiberglass-Based Asphalt Shingles & Accessories

Guide Specifications

A. [illegible]

B. [illegible]

C. [illegible]

D. [illegible]

1. [illegible]
2. [illegible]

[illegible] PREPARATION [illegible]

A. [illegible]

B. [illegible]

C. [illegible]

D. [illegible]

E. [illegible]

1. [illegible]
2. [illegible]
3. [illegible]
4. [illegible]

[illegible] UNDERLAYMENT INSTALLATION [illegible]

A. [illegible] Owens Corning™ [illegible]

1. [illegible]

Fiberglass-Based Asphalt Shingles & Accessories

Guide Specifications

[illegible] Dr[illegible] Ed[illegible]

[illegible] Dr[illegible] [illegible]

[illegible]

[illegible]

[illegible]

[illegible]

C. [illegible]

[illegible]

[illegible]

D. R[illegible] D[illegible]

[illegible]

[illegible]

[illegible]

E. [illegible]

[illegible]

[illegible]

[illegible]

[illegible] [illegible]LE [illegible]ALLA[illegible]

A. [illegible] Owens Corning™ [illegible]

[illegible]

C. [illegible]

D. [illegible]

![Owens Corning logo]

Fiberglass-Based Asphalt Shingles & Accessories

Guide Specifications

E. A[illegible] dr[illegible] [illegible] r [illegible] d [illegible] [illegible] d d[illegible] r [illegible] d [illegible] [illegible] r [illegible] d [illegible] [illegible] r [illegible] d [illegible] d r [illegible]

[illegible] C r[illegible] [illegible] r [illegible] d r d [illegible] rd [illegible] C r[illegible] [illegible] r [illegible] d [illegible] d [illegible] d r [illegible]

[illegible] L[illegible] L[illegible] E R[illegible] EM [illegible] ALLA[illegible]

A. [illegible] C r[illegible]™ [illegible] r [illegible] rd [illegible] C r[illegible] [illegible] r [illegible] d [illegible] rd [illegible] d [illegible] d r [illegible]

[illegible] C r[illegible]™ [illegible] r [illegible] d [illegible] d [illegible] r [illegible]

C. A[illegible] r dr d [illegible] r [illegible] C [illegible] d r [illegible] D [illegible] r [illegible] r [illegible] d [illegible] r [illegible]

D. A[illegible] r [illegible] dr d [illegible] r [illegible]

E. E[illegible] r [illegible] D[illegible] S[illegible] MA [illegible] d [illegible] r [illegible] r [illegible] r [illegible] r [illegible]

[illegible] E[illegible] ALLA[illegible]

A. [illegible] Owens Corning™ [illegible] rd [illegible] C r[illegible] [illegible] r [illegible] d [illegible] d [illegible] d r [illegible]

[illegible] r [illegible] d [illegible] d [illegible] d r [illegible] C r[illegible] r [illegible] d [illegible]

[illegible] r [illegible] Ar [illegible] A [illegible]

[illegible] d [illegible] r [illegible] r [illegible] r [illegible] r [illegible] d [illegible] A [illegible] d [illegible] rd [illegible]

[illegible] A [illegible] r [illegible] r [illegible] d [illegible] d [illegible]

[illegible] r [illegible] r [illegible] rd [illegible] r [illegible] d [illegible] rd [illegible] r [illegible] r [illegible]

[illegible] R[illegible] EC[illegible]

A. [illegible] r [illegible] d r d [illegible] r [illegible]

[illegible] r [illegible] r r [illegible] d [illegible] d r d [illegible] r S [illegible] C [illegible]

E[illegible] D [illegible] SEC[illegible]

S r[illegible] [illegible] r [illegible] r [illegible] r [illegible] S [illegible] d r [illegible] r [illegible] d [illegible] S [illegible] d [illegible] r [illegible] d [illegible]

[illegible] r [illegible] r [illegible] d r d [illegible] r [illegible] C r[illegible]
[illegible] C r[illegible] A R[illegible] R[illegible] r d

Oakridge® & TruDefinition® Oakridge® Shingles

Installation Instructions

Instrucciones Para La Instalación De Tejas Oakridge®

Oakridge® & TruDefinition® Oakridge® Shingles

Application Instructions

Before installing this product, check local building codes for their roofing requirements.

These shingles are designed for new or re-roofing work over any properly built and supported wood roof deck having adequate nail holding capacity and a smooth surface. Check local building codes.

Precautionary Note:

The manufacturer will not be responsible for problems resulting from any deviation from the recommended application instructions and the following precautions:

Roof Top Loading: Lay shingle bundles flat. Do not bend over the ridge.

Roof Deck: ▪ 6" Minimum roof deck boards ▪ Minimum 3/8" plywood ▪ Minimum 7/16" OSB

Regardless of deck type used, the roofing installer must:

1. Install the deck material in strict compliance with the deck manufacturer's instructions.
2. Prevent the deck from getting wet before, during and after installation.

Eave Flashing: Use Owens Corning® self-sealing ice and water barrier on the eaves in all regions of the country where roofs are susceptible to leaks from ice and water backup.

Ventilation: Must meet local building codes.

Handling: Use extra care in handling shingles when the temperature is below 40°F.

Storage: Store in a covered ventilated area at a maximum temperature of 110°F. Bundles should be stacked flat. Protect shingles from weather when stored at the job site. Do not store near steam pipes, radiators, etc.

Fastener requirement: Use galvanized steel, stainless steel, or aluminum nails minimum 12 gauge shank with 3/8" diameter head. Owens Corning Roofing recommends that fasteners comply with ASTM F 1667. Check local building codes.

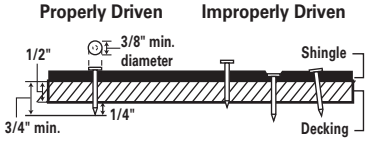

All Fasteners must penetrate at least 3/4" into the wood deck or completely through sheathing.

Notice: Owens Corning Roofing recommends the use of nails as the preferred method of attaching shingles to wood decking or other nailable surface.

Instrucciones de aplicación

Antes de colocar este producto, verifique los códigos locales de construcción para conocer los requisitos de su techo.

Estas tejas han sido diseñadas para la construcción de techos nuevos o el arreglo de techos existentes sobre plataformas de madera correctamente construidas y que poseen una capacidad de sujeción de clavos y una superficie lisa. Consulte los códigos de construcción locales.

Aviso importante:

El fabricante no se hará responsable por los problemas que surjan como consecuencia de no seguir exactamente las instrucciones de instalación recomendadas y de los siguientes avisos importantes:

Carga sobre los techos: Coloque los paquetes de tejas de manera plana sobre el techo. No los doble sobre la cumbrera.

Plataforma del techo: ▪ 6 pulgadas de mínimo sobre la estructura base del techo ▪ 3/8 pulg. como mínimo de madera triplay ▪ 7/16 pulg. como mínimo para paneles de fibra orientada

Cualquiera que sea el tipo de superficie utilizada, el instalador del techo debe:

1. Instalar el material de la plataforma siguiendo estrictamente las instrucciones del fabricante.
2. Evitar que la plataforma se moje antes, durante y después de la instalación.

Tapajuntas para aleros: Utilice la barrera autosellante resistente al agua y al hielo de Owens Corning en los aleros de todas las regiones del país en las que los techos estén expuestos a filtraciones por causa de la acumulación de agua y hielo.

Ventilación: Debe cumplir con los códigos de construcción locales.

Uso: Tenga mucho cuidado al usar y colocar las tejas cuando la temperatura sea inferior a los 40°F.

Almacenamiento: Almacene en un área cubierta y ventilada a una temperatura que no sobrepase los 110°F/43°C. Almacenar en forma plana. Proteja las tejas del clima cuando las almacene en el lugar de trabajo. No las almacene cerca de tuberías de vapor, radiadores, etc.

Requisito de sujetador: Use clavos de acero galvanizado, acero inoxidable o de aluminio, de calibre 12 como mínimo, con un diámetro de cabeza de 3/8 pulg. Owens Corning Roofing recomienda que los sujetadores cumplan con la norma ASTM F 1667. Consulte los códigos de construcción locales.

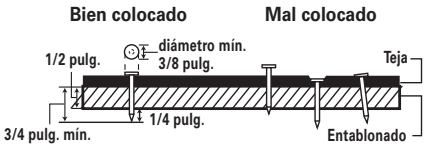

Todos los sujetadores deben penetrar al menos 3/4 pulg. en la plataforma del techo de madera o atravesar completamente los revestimientos de madera triplay.

Aviso: Owens Corning Roofing recomienda el uso de clavos como método preferido para fijar tejas a superficies de madera u otras superficies aptas para clavos.

CAUTION

ROOF SURFACE MAY BE SLIPPERY: Especially when wet or icy. Use a fall protection system when installing. Wear rubber soled shoes. Walk with care.

FALLING HAZARD: Secure area below work and materials on roof. Unsecured materials may slide on roof. Place on level plane or secure to prevent sliding. Wear a hard hat.

WARNING: This product contains a chemical known to the State of California to cause cancer.

CUIDADO

EL TECHO PUEDE ESTAR RESBALOSO: Especialmente cuando está mojado o cubierto de hielo. Al realizar la instalación, utilice un sistema de protección contra las caídas. Utilice zapatos con suela de goma. Camine con cuidado.

PELIGRO DE CAÍDA DE OBJETOS: Asegure el área que se encuentra debajo de la zona de trabajo y los materiales que están sobre el techo. Los materiales que no estén sujetos pueden caerse del techo. Colóquelos en un lugar sin pendiente o sujételos para que no se caigan. Use un casco resistente.

ADVERTENCIA: Este producto contiene una sustancia química considerada cancerígena en el estado de California.

1 Specialty Eave Flashing:

Use Owens Corning® self-sealing ice and water barrier on the eaves in all regions of the country where roofs are susceptible to leaks from ice and water backup. Apply starting at the eave edge and extend upslope a minimum of 24 inches from the interior wall line. *See Fig. 1.*

Fig. 1 Specialty Eave Flashing
Tapajuntas especial para aleros

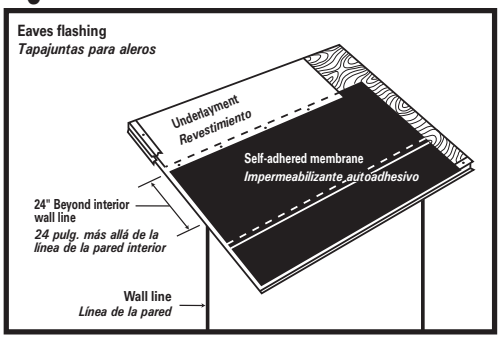

1 Tapajuntas especial para aleros:

Utilice la barrera autosellante resistente al agua y al hielo de Owens Corning en los aleros de todas las regiones del país en las que los techos estén expuestos a filtraciones por causa de la acumulación de agua y hielo. Para la instalación, comience en el borde del alero y extienda hacia arriba un mínimo de 24 pulgadas desde la línea de la pared interior. *Ver la Fig. 1.*

2 Underlayment:

Standard Slope (4" in 12" or more)

Application of underlayment, metal drip edges, and eaves flashing: *See Fig. 2.*

(A) Apply one layer of underlayment over metal drip edge at eaves. Use only enough fasteners to hold in place.

(B) Overlap successive courses 2". Overlap course ends 4". Side laps are to be staggered 6' apart.

(C) Apply metal drip edge over underlayment at rake.

Fig. 2 Underlayment Standard Slope
Pendiente estándar del revestimiento

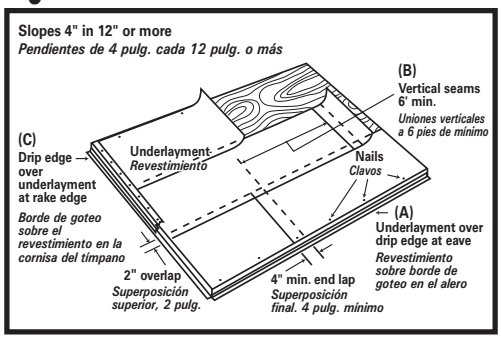

2 Revestimiento:

Pendiente estándar (4 pulg. cada 12 pulg. o más)

Instalación del revestimiento, bordes de goteo metálicos y tapajuntas de aleros: *Ver la Fig. 2.*

(A) Instale una sección del revestimiento sobre el goterón metálico del alero. Utilice la cantidad estrictamente necesaria de sujetadores para mantenerla en su lugar.

(B) Sobreponga las hileras siguientes 2 pulg. Sobreponga los extremos de las hileras 4 pulg. Los empalmes laterales deben escalonarse a 6 pies de distancia.

(C) Instale el borde de goteo de metal sobre el revestimiento en la cornisa.

3 Underlayment:

Low Slope (2" in 12" to less than 4" in 12")

Application of underlayment, metal drip edges, and eaves flashing: *See Fig. 3.*

(A) Apply 19" starter strip of underlayment over metal drip edge at eaves. Use only enough fasteners to hold it in place.

(B) Use 36" strip of underlayment for remaining courses, overlapping each course 19". Side laps are to be staggered 6' apart.

(C) Apply metal drip edge over underlayment at rake.

Or WeatherLock® self-adhered underlayment or equivalent with a standard over lap of 3" and metal drip edge. *See Fig. 3A.*

Fig. 3 Underlayment Low Slope
Pendiente baja del revestimiento

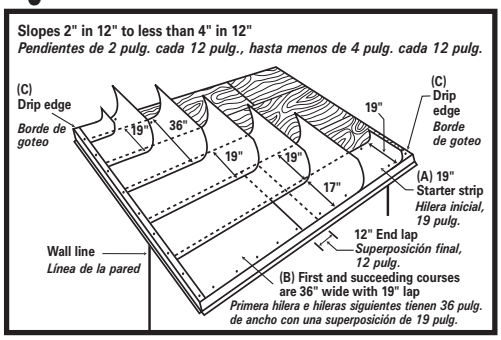

Fig. 3A Underlayment Low Slope
Pendiente baja del revestimiento

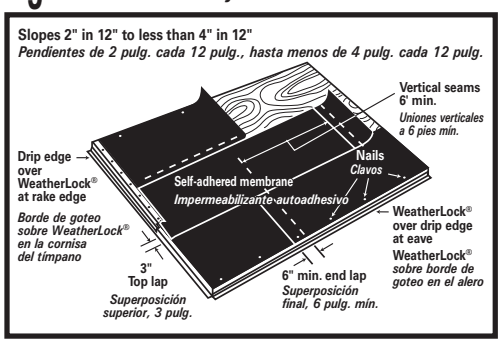

3 Revestimiento:

Pendiente baja (2 pulg. cada 12 pulg., a menos de 4 pulg. cada 12 pulg.) Instalación del revestimiento, bordes de goteo metálicos y tapajuntas de aleros: *Ver la Fig. 3.*

(A) Instale una sección inicial de 19 pulg. de revestimiento sobre el goterón metálico del alero. Utilice la cantidad estrictamente necesaria de sujetadores para mantenerla en su lugar.

(B) Use una sección de revestimiento de 36 pulg. para el resto de las hileras, sobreponiendo cada hilera 19 pulg. Los empalmes laterales deben escalonarse a 6 pies de distancia.

(C) Instale el borde de goteo de metal sobre el revestimiento en la cornisa.

O membrana autoadherente WeatherLock® o equivalente con una superposición estándar de 3 pulg. y borde de escurrimiento. *Ver la Fig. 3A.*

4 Shingle Fastening:

Place fasteners 6⅛" from bottom edge of each shingle and 1" from each end.

Standard Pattern Use four fasteners. *See Fig. 4.*

Six Nail Pattern Use six fasteners. *See Fig. 4A.*

Mansard or Steep Slope Fastening Pattern. Place fasteners 6⅛" from bottom edge to secure both layers of the shingle. *See Fig. 4B.*

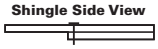

REQUIRED: For slopes exceeding 60 degrees or 21 inches per foot, use six fasteners and four spots of asphalt roof cement per shingle. Apply immediately; one 1" diameter spot of asphalt roof cement **under** each shingle tab. Center asphalt roof cement 2" up from bottom edge of shingle tab. *See Fig. 4B.*

Roof Cement where required must meet ASTM D-4586 Type I or II (Asbestos Free).

Six nail fastening pattern is required for maximum wind warranty. In addition, Owens Corning® Starter Shingles are required along the eave and rake. (See Starter Shingle instructions for details.)

Fig. 4 Standard Fastening Pattern
Esquema de instalación estándar

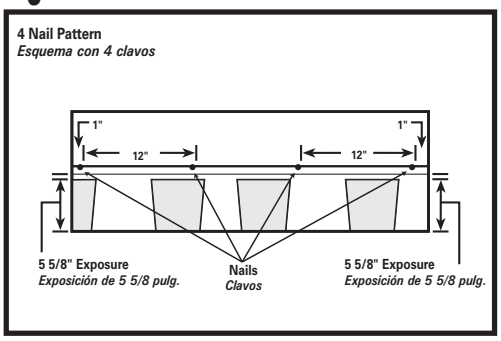

Fig. 4A Six Nail Fastening Pattern
Esquema de instalación con seis clavos

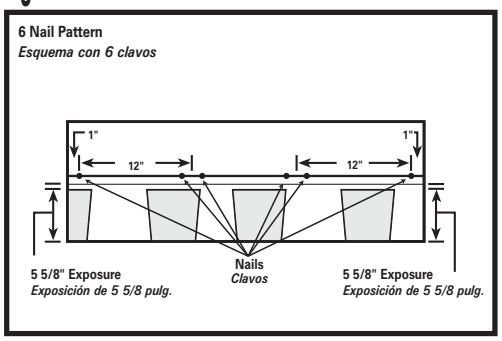

Fig. 4B Mansard or Steep Slope Fastening Pattern
Esquema de instalación en pendientes pronunciadas o mansardas

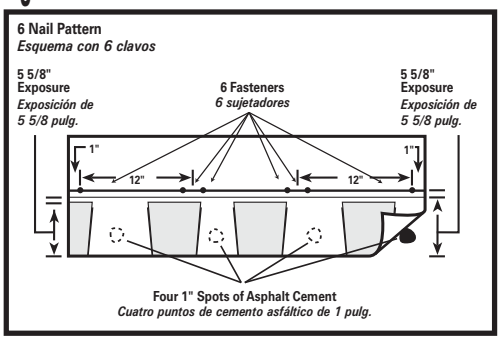

4 Sujeción de las tejas:

Coloque los sujetadores a 6⅛ pulg. a partir del borde inferior de cada teja y a 1 pulg. de cada extremo.

Esquema estándar. Utilice cuatro sujetadores. *Ver la Fig. 4.*

Esquema con seis clavos Para 6 sujetadores. *Ver la Fig. 4A.*

Esquema de instalación en pendientes pronunciadas o mansardas. Coloque los sujetadores a 6⅛ pulg. del borde inferior para ajustar ambas capas de la teja. *Ver la Fig. 4B.*

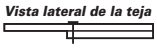

REQUISITO: Para pendientes de más de 60 grados o 21 pulg. por pie, utilice seis sujetadores y cuatro cantidades pequeñas de cemento asfaltado por teja. Instale inmediatamente una sección con 1 pulg. de diámetro de cemento asfaltado **debajo** de cada lengüeta de las tejas. Asegúrese de que el cemento asfaltado esté centrado 2 pulg. por encima del borde inferior de la lengüeta de la teja. *Ver la Fig. 4B.*

Cuando sea necesario utilizar **cemento para techos**, éste debe cumplir con la norma ASTM D-4586 Tipo I ó II (sin asbestos).

El esquema de fijación de seis clavos es obligatorio para la garantía máxima contra vientos. Además, es necesario instalar las tejas para la hilera inicial de Owens Corning® en las cornisas de tímpano y los aleros. (Consulte las instrucciones de las tejas para la hilera inicial para obtener información detallada).

5 Shingle Application:

These shingles are applied with a 6½" offset, with 5⅝" exposure, over prepared roof deck, starting at the bottom of the roof and working across and up. This will blend shingles from one bundle into the next and minimize any normal shade variation. Application with offsets of 4" or 8" are also acceptable.

Caution must be exercised to assure that end joints are no closer than 2" from fastener in the shingle below and that side laps are no less than 4" in succeeding courses. Refer to course application steps for specific instructions.

Starter Course:

Use an Owens Corning® Starter shingle product or trim 5⅝" from the starter course shingle. Trim 6½" off the rake of the starter course shingle and flush with the drip edge along the rake and eaves edge, and continue across the roof. Use 5 fasteners for each shingle, placed 2" to 3" up from eaves edge. *See Fig. 5.* **(If no drip edge is used, shingles must extend a minimum of ½" and no more than 1" from rake and eaves edge.)**

First Course:

Apply first course starting with the full shingle even with the starter course. *See Fig. 5A.* Fasten securely according to fastening instructions. *See Fig. 4.*

Second Course:

Remove 6½" from the left end of this shingle and apply the remaining piece over and above the first course shingle and flush with edge of the first course with 5⅝" exposure. *See Fig. 5B.* Fasten securely according to fastening instructions. *See Fig. 4.*

Third Course:

Remove 13" from the left end of this shingle and apply the remaining piece over and above the second course shingle flush with edge of the second course with 5⅝" exposure. *See Fig. 5C.* Fasten securely according to fastening instructions. *See Fig. 4.*

(continued on next page)

Fig. 5 Shingle Application
Instalación de tejas

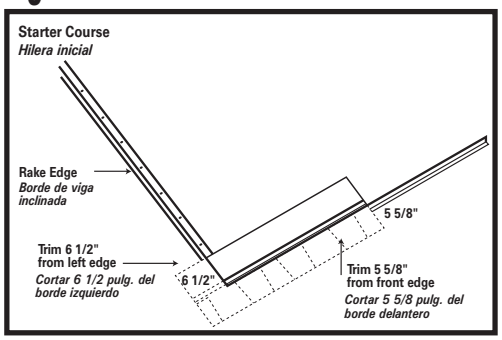

Fig. 5A Shingle Application
Instalación de tejas

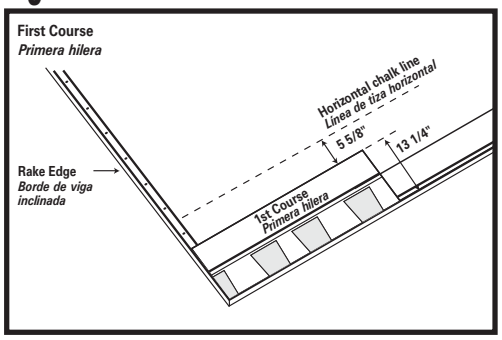

Fig. 5B Shingle Application
Instalación de tejas

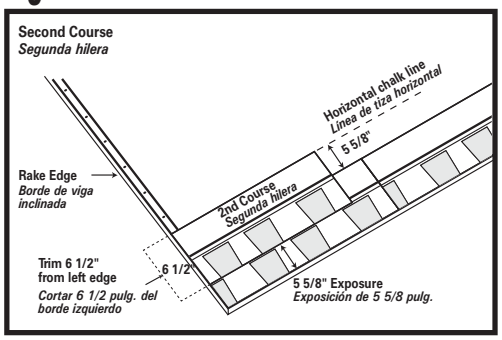

Fig. 5C Shingle Application
Instalación de tejas

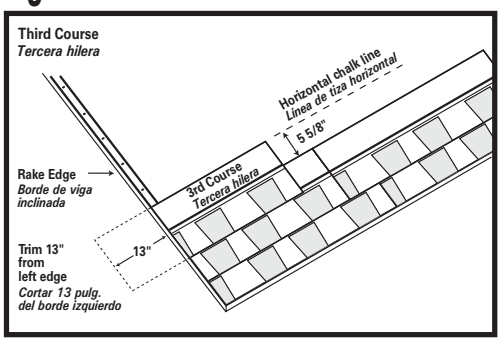

5 Instalación de las tejas:

Estas tejas se instalan con un desplazamiento de 6½ pulg., con una superficie expuesta de 5⅝ pulg., sobre plataformas de techos preparadas. La colocación comienza por la parte inferior del techo y se realiza en forma transversal hacia arriba. De esta manera, las tejas de un paquete se mezclan con las del siguiente y se reducen al mínimo las variaciones normales de tonalidad. También se pueden instalar tejas con un desplazamiento de 4 ó 8 pulg.

Asegúrese de que las uniones de los extremos no se encuentren a menos de 2 pulg. del sujetador de la teja que se encuentra más abajo, y que las superposiciones laterales no sean de menos de 4 pulg. en las hileras siguientes. Consulte los pasos de instalación de hileras para ver las instrucciones específicas.

Hilera inicial:

Utilice un rollo de inicio o corte 5⅝ pulg. de la teja de la hilera inicial. Corte 6½ pulg. desde la viga inclinada en la teja de la hilera inicial y extienda más allá de la viga inclinada y el borde del alero, y continúe a lo ancho del techo. Utilice 5 sujetadores para cada teja, colocados a una distancia de entre 2 y 3 pulg. del borde del alero. *Ver la Fig. 5.* **(Si no utiliza un borde de goteo, las tejas deben extenderse un mínimo de ½ pulg. y un máximo de 1 pulg. de la viga inclinada y el borde del alero.)**

Primera hilera:

Coloque la primera hilera comenzando con la teja entera alineada con la hilera inicial. *Ver la Fig. 5A.* Sujete firmemente de acuerdo con las instrucciones de sujeción. *Ver la Fig. 4.*

Segunda hilera:

Quite 6½" pulg. del borde izquierdo de esta teja y aplique la pieza restante sobre y por encima de la teja de la primera hilera y al ras del borde de la primera hilera, con 5⅝ pulg. de exposición. *Ver la Fig. 5B.* Sujete firmemente de acuerdo con las instrucciones de sujeción. *Ver la Fig. 4.*

Tercera hilera:

Quite 13 pulg. del borde izquierdo de esta teja y aplique la pieza restante sobre y por encima de la teja de la segunda hilera y al ras del borde de la segunda hilera, con 5⅝ pulg. de exposición. *Ver la Fig. 5C.* Sujete firmemente de acuerdo con las instrucciones de sujeción. *Ver la Fig. 4.*

(continúa en la página siguiente)

5 Shingle Application (cont.):

Fourth Course:

Remove 19½" from the left end of this shingle and apply the remaining piece over and above the third course shingle and flush with edge of the third course with 5⅝" exposure. *See Fig. 5D.* Fasten securely according to fastening instructions. *See Fig. 4.*

Fifth Course:

Remove 26" from the left end of this shingle and apply the remaining piece over and above the fourth course shingle and flush with edge of the fourth course with 5⅝" exposure. *See Fig. 5E.* Fasten securely according to fastening instructions. *See Fig. 4.*

Sixth Course:

Remove 32½" from the left end of this shingle and apply the remaining piece over and above the fifth course shingle and flush with edge of the fifth course with 5⅝" exposure. *See Fig. 5F.* Fasten securely according to fastening instructions. *See Fig. 4.*

Succeeding Courses:

For succeeding courses, repeat first through sixth course. *See Fig. 5G.*

Fig. 5D Shingle Application
Instalación de tejas

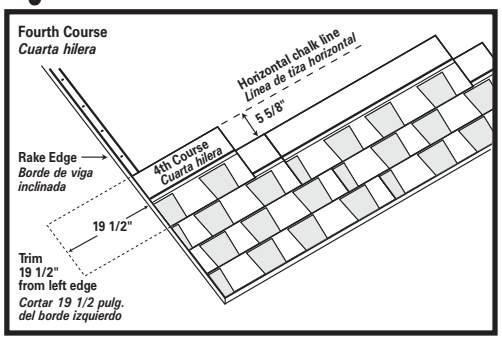

Fig. 5E Shingle Application
Instalación de tejas

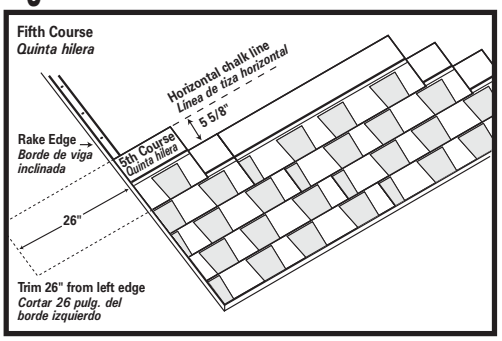

Fig. 5F Shingle Application
Instalación de tejas

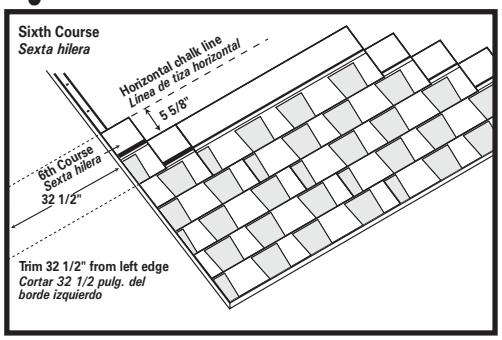

Fig. 5G Shingle Application
Instalación de tejas

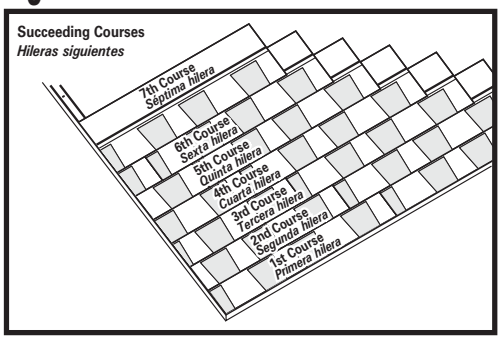

5 Instalación de las tejas (cont.):

Cuarta hilera:

Quite 19½ pulg. del borde izquierdo de esta teja y aplique la pieza restante sobre y por encima de la teja de la tercera hilera y al ras del borde de la tercera hilera, con 5⅝ pulg. de exposición. *Ver la Fig. 5D.* Sujete firmemente de acuerdo con las instrucciones de sujeción. *Ver la Fig. 4.*

Quinta hilera:

Quite 26 pulg. del borde izquierdo de esta teja y aplique la pieza restante sobre y por encima de la teja de la cuarta hilera y al ras del borde de la cuarta hilera, con 5⅝ pulg. de exposición. *Ver la Fig. 5E.* Sujete firmemente de acuerdo con las instrucciones de sujeción. *Ver la Fig. 4.*

Sexta hilera:

Quite 32½ pulg. del borde izquierdo de esta teja y aplique la pieza restante sobre y por encima de la teja de la quinta hilera y al ras del borde de la quinta hilera, con 5⅝ pulg. de exposición. *Ver la Fig. 5F.* Sujete firmemente de acuerdo con las instrucciones de sujeción. *Ver la Fig. 4.*

Hileras siguientes:

Para las hileras siguientes, repita los pasos que se indican desde la primera hasta la sexta hilera. *Ver la Fig. 5G.*

6 Valley Construction:

Closed-Cut Valley *See Fig. 6.*

A closed-cut valley can be used as an alternative to woven and open valley and is applied as follows:

Lay a 36" wide valley liner of self-adhered membrane underlayment or equivalent. A 36" wide minimum 50 lb. smooth surface roll roofing can also be used as a valley liner. Lay all shingles on one side of valley and across center line of valley a minimum of 12". Fasten a minimum of 6" away from center line on each side of valley. Strike a chalk line 2" from the center line of the unshingled side. Apply shingles on the unshingled side up to the chalk line and trim, taking care not to cut the underlying shingles. Clip upper corners of these shingles, cement and fasten. Both woven and metal valleys are acceptable alternatives.

Fig. 6 Closed-Cut Valley Construction
Construcción del valle con corte cerrado

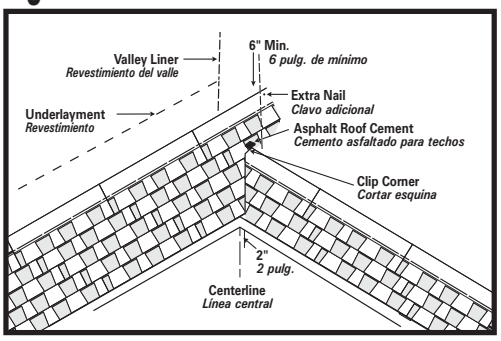

6 Construcción del valle:

Valle cerrado *Ver la Fig. 6.*

Un valle con corte cerrado puede ser usado como alternativa a un valle tejido o abierto y se coloca de la siguiente manera:

Coloque en el valle un impermeabilizante autoadhesivo o equivalente con 36 pulg. de ancho. Para revestir el valle, también se puede utilizar un rollo de techado de 36 pulg. de ancho y un mínimo de 50 libras. Coloque todas las tejas sobre un lado del valle y a través de la línea central del valle al menos 12 pulg. Sujete a un mínimo de 6 pulg. de la línea central a cada lado del valle. Marque una línea de tiza a 2 pulg. de la línea central del lado que no tiene tejas. Coloque las tejas del lado que no tiene tejas hasta la línea de tiza y recorte, con cuidado de no cortar las tejas que se encuentran debajo. Una los extremos superiores de estas tejas, coloque cemento y sujete. Se pueden utilizar valles de tejido o metal.

7 Step Flashing:

Use 10" long and 2" wider than expected exposure corrosion-resistant metal where roof planes butt against vertical sidewalls or chimneys. *See Fig. 7.*

Fig. 7 Step Flashing
Tapajuntas escalonado

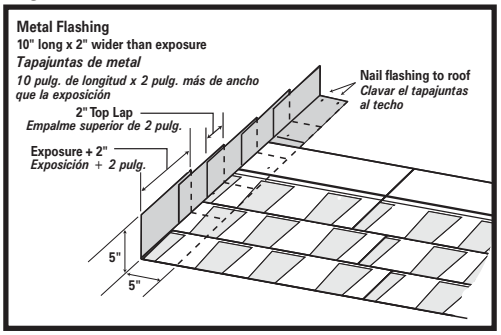

7 Revestimineto escalonado:

Utilice metal resistente a la corrosión con una exposición de 10 pulg. de longitud y de 2 pulg. más de ancho que la exposición esperada en los puntos en los que los planos del techo se unan a las paredes laterales verticales o a chimeneas. *Ver la Fig. 7.*

8 Hip & Ridge Application:

Use corresponding Owens Corning® Hip & Ridge shingles to best complement shingle color. Follow specific application instructions as printed on the Hip & Ridge shingle package. *See Fig. 8.*

Fig. 8 Hip & Ridge Application
Instalación de caballetes y cumbreras

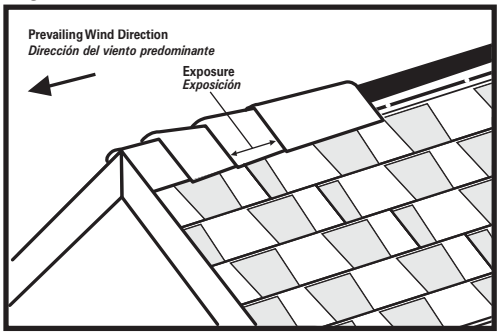

8 Aplicación para caballete y cumbrera

Utilice Owens Corning® tejas para caballetes y cumbreras. Siga las instrucciones de instalación del paquete de caballetes y cumbreras. *Ver la Fig. 8.*

OWENS CORNING ROOFING AND ASPHALT, LLC
ONE OWENS CORNING PARKWAY
TOLEDO, OHIO, USA 43659

1-800-GET-PINK®
www.owenscorning.com/roofing

Pub. No. 10003280-E. Printed in U.S.A. January 2018.
THE PINK PANTHER™ & © 1964–2018 Metro-Goldwyn-Mayer Studios Inc.
The color PINK is a registered trademark of Owens Corning. © 2018 Owens Corning.
All Rights Reserved.

Deck Defense®

High Performance Roof Underlayment

Moisture protection for your home.

Deck Defense® High Performance Roof Underlayment is a component of the Owens Corning® Total Protection Roofing System.™^

Block water damage.

When it comes to your new roof, don't take chances. Ask for the moisture protection that Owens Corning® Deck Defense® *High Performance Roof Underlayment* can provide.

New *Deck Defense* underlayment's durable synthetic construction provides an immediate line of defense—so strong it can protect your roof for up to 6 months** of UV exposure. It also acts as a secondary water-shedding barrier for your roof once shingles are installed. In addition, unlike standard felt underlayment, it comes with a 30-Year Limited Warranty*.

A roof is a big investment. That's why it's important to make sure it's done right from the beginning to help ensure it's protected from water damage in the attic. One of the first steps to a high-performing roof is using underlayment in conjunction with shingles to help shield your home from moisture infiltration.

Repels and protects

- Offers long-term moisture protection for your roof compared to standard felt underlayment
- Acts as a non-absorbent, secondary water-shedding barrier
- Reduces water intrusion when exposed

Guards and withstands

- Helps shield your home during roof installation
- Protects the roof deck for up to 6 months** of UV exposure
- 30-Year Limited Warranty*

Endures and performs

- Durable synthetic construction resists tearing when walked on
- Stays intact in high winds**
- Designed to reduce the chance for tears that can cause leaks compared to felt underlayment

Easy installation

- Extra-wide roll provides up to 5 times more coverage per roll than standard #30 felt underlayment
- Preprinted nailing pattern and overlap lines speed installation

High-traction, slip-resistant surface

- Specially engineered textured and coated top layer provides traction for a secure work area compared to other leading synthetic underlayments

Deck Defense® vs. Organic Felt underlayment — the right choice is clear.

	Deck Defense® Underlayment	Conventional #30 Organic Felt
Construction	100% Engineered Polyolefin	Asphalt/Organic Felt
Roll Size	1,000 sq. ft., 48" wide	200 sq. ft., 36" wide
Weight Per Square	3.3 lbs.[1]	20 lbs.
UV Exposure	Can be left exposed for up to 6 months**	Needs to be covered immediately
Warranty	30-Year Limited Warranty*	No warranty
Weather Performance	Does not curl or wrinkle when exposed to moisture	May curl, wrinkle and crack when exposed to moisture
Slip Resistance	Unique woven technology and coated surface aides in traction, even when wet	May become slick or wrinkled in wet conditions, leading to an unsafe walking surface
Nailing Pattern	Nailing aids for proper application, both in standard and high wind areas	No nailing guides
Durability	Repels and sheds water	Absorbs water and moisture
Surface Temperature	Light gray color reduces roof temperature when exposed	Black color absorbs heat and increases roof temperature
Tear Resistance	Resistant to tearing, even when walked on or in high winds	Often tears during installation and fastening, causing leaks and rework

The most important part of the roof? All of them.

It takes more than just shingles to protect your home. It takes an integrated system of components and layers designed to withstand the forces of nature outside while controlling temperature and humidity inside. The Owens Corning® Total Protection Roofing System™^ gives you the assurance that all of your Owens Corning® roofing components are working together to help increase the performance of your roof — and to enhance the comfort and enjoyment of those who live beneath it.

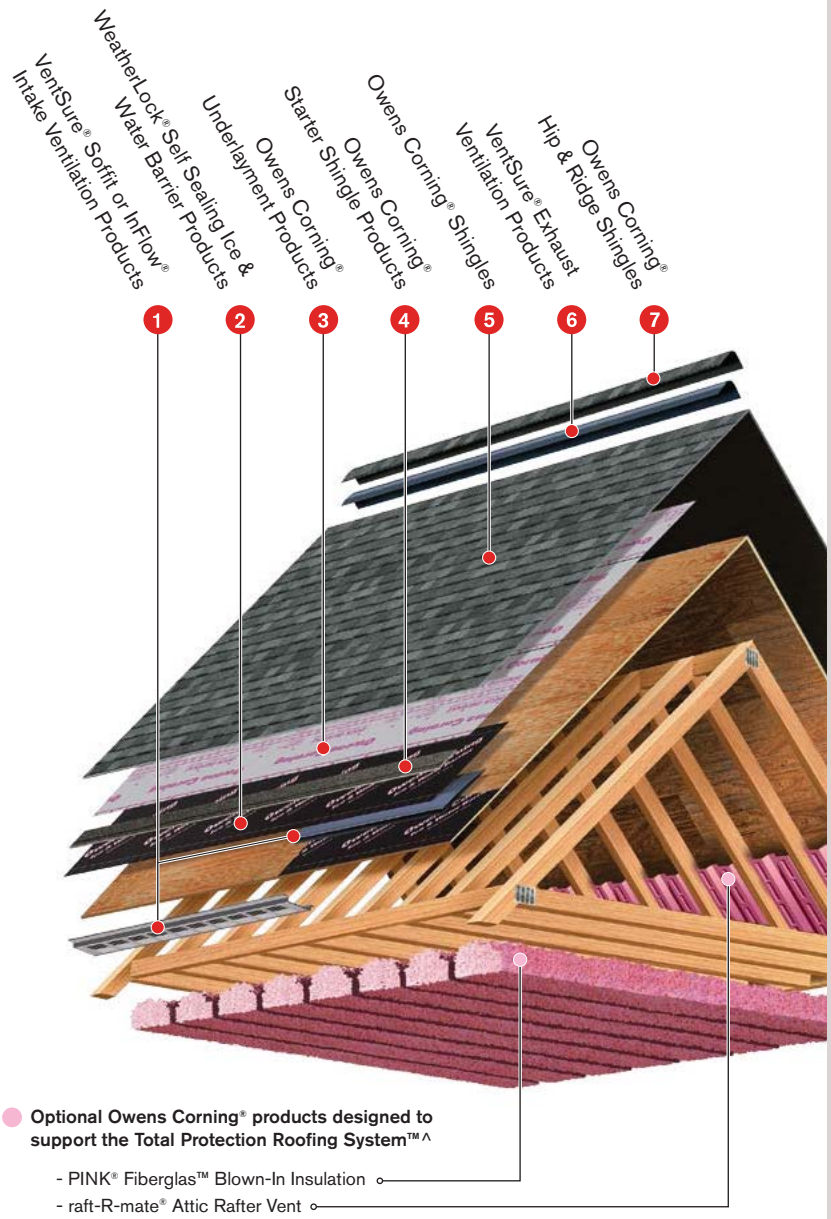

^ Excludes non-Owens Corning® roofing products such as flashing, fasteners and wood decking.
* See actual warranty for complete details, limitations and requirements.
** Special application required for extended exposure. See installation instructions.
† For non-asphaltic roofing materials, check with the manufacturer as to the suitability of using Deck Defense® High Performance Roof Underlayment. Install following the roofing manufacturer's application instructions.
†† Applies for all areas that recognize Miami-Dade County Product Control Section.
‡ Underlayment is tested as part of a roof assembly that includes wood decking, underlayment and asphalt shingles.
# International Code Council Evaluation Services Acceptance Criteria for Alternative Asphalt Shingles.
1 Excludes core weight.
2 Includes core weight.

Product Attributes

Warranty Length

30-Year Limited*

Application

Engineered for asphalt, tile and metal roof assemblies†

Typical Values

Length	250 ft.
Width	48 in.
Nominal Weight per Roll	36 lbs.[2]
Coverage (with 3-in. overlap)	937 sq. ft.
Exposed Color	Light gray
Surface Construction	Coated textured poly

Applicable Standards and Codes

- ASTM D226
- ASTM D4869
- ASTM E108/UL 790 (Class A Fire Resistance)‡
- Florida Product Approval
- ICC-ES AC188
- ICC-ESR 3229#
- Miami-Dade County Product Approval††

Want to know more about Owens Corning® products or find an Owens Corning Roofing Preferred Contractor in your area? It's easy to reach us:

1-800-GET-PINK®
www.owenscorning.com/roofing

OWENS CORNING ROOFING AND ASPHALT, LLC
ONE OWENS CORNING PARKWAY
TOLEDO, OHIO, USA 43659

1-800-GET-PINK®
www.owenscorning.com/roofing

Pub. No. 10010926-G. Printed in U.S.A. September 2015.THE PINK PANTHER™ & © 1964–2015 Metro-Goldwyn-Mayer Studios Inc. All Rights Reserved. The color PINK is a registered trademark of Owens Corning. © 2015 Owens Corning. All Rights Reserved.

(All Plants)

Owens Corning Roofing Preferred Contractors are independent contractors and are neither affiliates nor agents of Owens Corning Roofing and Asphalt , LLC, or its affiliated companies.

DRIP EDGE INSTALLATION

[illegible]

[illegible]

[illegible]

[illegible]

[illegible] Roofing [illegible]

[illegible]

[illegible]

[illegible]

[illegible]

[illegible] or obligation and is given and accepted at recipient's sole risk. [illegible]

[illegible] LLC

[illegible]

Owens Corning™ Roofing Shingle Products

HELPING YOU ACHIEVE LEED® CERTIFICATION

Owens Corning™ Roofing Products help protect from the elements and severe weather for commercial, institutional and high-rise residential buildings with a broad array of aesthetically appealing roofing products. This document applies to the LEED New Construction and Major Renovations, LEED Commercial Interiors, LEED Core & Shell, LEED for Schools and LEED for Existing Buildings, Operations & Maintenance products. As you pursue LEED Certification, rely on the products and expertise of Owens Corning.

LEED Certification and the awarding of credits, is based on the overall project design, properly designed building systems and construction assemblies, and the performance of the project as a whole. Roofing Shingle Products can be components in many roofing systems and assemblies. All components and assemblies should be considered when seeking credits within a given category. Owens Corning™ Shingle Products contribute to the categories listed below.

Owens Corning™ Roofing Shingle Products:

- Berkshire® Collection
- Woodmoor® Shingles
- Woodcrest® Shingles
- TruDefinition® Duration® Designers Color Collection
- TruDefinition® Duration® Shingles
- TruDefinition® Duration STORM® Shingles
- TruDefinition® Duration MAX™ Shingles
- TruDefinition® Oakridge® Shingles
- TruDefinition® WeatherGuard® HP Shingles
- Duration® Premium Cool Shingles
- Duration® Premium Shingles
- Supreme® Shingles

Table 1 **(Chart continued on next page)**

Contribution to LEED Requirement

LEED Credit Category	LEED Requirement	Owens Corning™ Product Contribution
Energy and Atmosphere (EA)		
Prerequisite 2: Minimum Energy Performance	10% performance improvement for new buildings or 5% better performance for renovated existing buildings, with baseline building performance rating calculated per method in Appendix G of ANSI/ ASHRAE/IESNA Standard 90.1-2007 for whole building simulation.	Owens Corning™ Roofing Products, Duration® Premium Cool Shingles, TruDefinition® Duration,® Oakridge® and Supreme® Shasta White Shingles can help to reduce building energy demand. The project team is responsible for conducting the energy analysis to determine the overall building energy efficiency.
Credit 1: Optimize Energy Performance (1-19 points)	Improve building performance rating compared with the baseline building performance rating, calculated per Appendix G of ANSI/ASHRAE/IESNA Standard 90.1-2007 a whole project simulation model, with points awarded per energy cost savings in LEED table.	Owens Corning™ Roofing Products, Duration® Premium Cool Shingles, TruDefinition® Duration,® Oakridge® and Supreme® Shasta White Shingles can help to reduce building energy demand. The overall contribution depends on the building system or construction assembly where the product is used. The project team is responsible for conducting the energy analysis to determine the overall building energy efficiency.
Credit 2: Construction Waste Management (1-2 points)	Develop and implement a waste management plan, quantifying material diversion by weight (Remember that salvage may include the donation of materials to charitable organizations such as Habitat for Humanity.) Recycle and/or salvage at least 50% (by weight) of construction, demolition, and land clearing waste (1 point) Recycle and/or salvage an additional 25% (75% total by weight) of the construction, demolition, and land clearing debris (1 point)	Owens Corning™ Roofing Preferred Contractor Shingle Recycling Program available in specific markets.

Table 1 **(Continued)**

Contribution to LEED Requirement

LEED Credit Category	LEED Requirement	Owens Corning™ Product Contribution
Materials & Resources (MR)		
Credit 4: Recycled Content (1-2 points)	Materials with recycled content such that the sum of post-consumer recycled content plus ½ of the pre-consumer content constitutes at least 10% (1 point) or 20% (2 points), based on cost, of the total value of the materials in the project.	Owens Corning™ Shingle Products contain varying levels of pre-consumer recycled content, depending on product and manufacture location. See Table 2
Credit 5: Regional Material (1-2 points)	Materials/products extracted and manufactured (or fraction thereof) within 500 miles of project site for a minimum of 10% (1 point) or 20% (2 points), based on cost, of the total materials value (fractional quantities contribute as percentage by weight).	Owens Corning™ Shingle products are made in many locations, providing regionally available product manufactured and sourced within a 500 mile radius of project locations in many areas of the country. Owens Corning™ Roofing plant locations are shown in Fig. 1. Contact 1-800-GET-PINK® for additional information.
Innovation in Design (ID) (1-4 points)	Credit can be achieved through any combination of the Innovation in Design and Exemplary Performance.	Refer to individual product data sheets or check with the local sales representative for product applications.

Note: No individual material enables a credit point to be taken within LEED because each category is dependent on the aggregate of all materials and their proportionate relationship to the total dollar cost of all materials.

Table 2

Manufacturing Facility	Shingles Product	Pre-Consumer Recycle Content Available for LEED NC Credit
Atlanta	Supreme® Shingles	11%
	Oakridge® Shingles	
Brookville	Oakridge® Shingles	7%
	TruDefinition® Duration® Shingles	7%
Medina	Supreme® Shingles	9%
Memphis	Supreme® Shingles	15%
	Oakridge® Shingles	4%
Summit	Supreme® Shingles	20%
	Oakridge® Shingles	8%

Recycled content is a yearly average based on tons of recycled material purchased divided by the nominal square weight times the squares provided.

Figure 1

Owens Corning™ Roofing Shingle Product Plant Locations

To view other Owens Corning™ products that help contribute to LEED certification please visit http://sustainability.owenscorning.com/ and download Pub. No. 10011611.

OWENS CORNING ROOFING AND ASPHALT, LLC
ONE OWENS CORNING PARKWAY
TOLEDO, OHIO 43659

1-800-GET-PINK®
www.owenscorning.com

Pub. No. 10011706-E. Printed in U.S.A. March 2013. The color PINK is a registered trademark of Owens Corning. ©2013 Owens Corning. All Rights Reserved. LEED® is a registered trademark of US Green Building Council.

Standard Product Limited Warranty

on Roofing Shingles

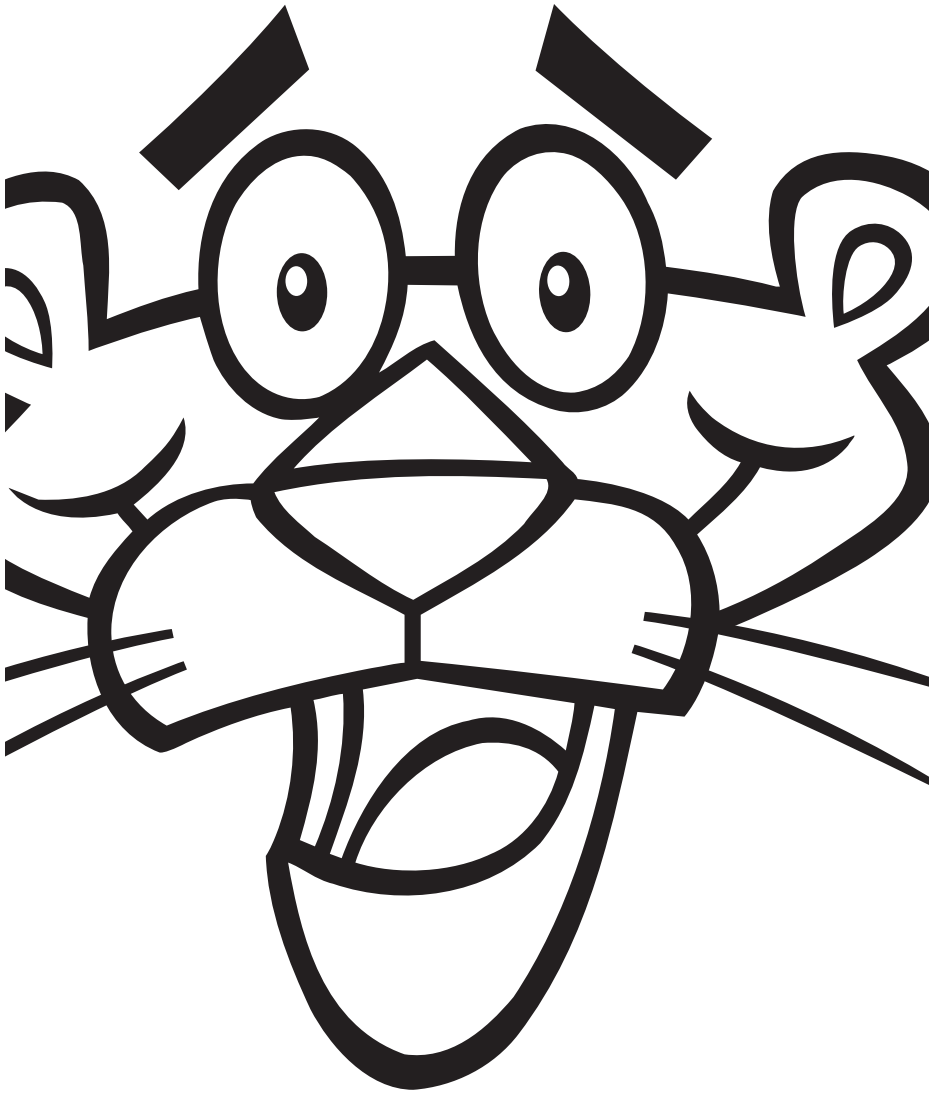

Standard Product Limited

This warranty includes limitations on its trans

THIS WARRANTY GIVES YOU SPECIFIC LEGAL RIGHTS, AND YOU MAY ALSO HAVE OTHER RIGHTS WHICH VARY FROM STATE TO STATE OR PROVINCE TO PROVINCE.

Introduction

Thank you for your recent purchase of Owens Corning® roofing shingles manufactured by Owens Corning Roofing and Asphalt, LLC ("Owens Corning"). We believe we manufacture the highest quality and most attractive shingles available anywhere, and that is why we stand behind them with one of the best warranties in the industry. We have attempted to write this warranty in clear, plain English, so you will fully understand the warranty we are making to you. If anything in this warranty is not clear to you, please call us at 1-800-ROOFING or visit our web site at www.owenscorning.com/roofing.

Who Is Covered

To be entitled to the benefits of this warranty: (1) your property must be located in the United States or Canada and (2) you must be either (a) the original consumer purchaser (the property owner, not the installer or contractor) of one of our shingle products listed in the **"Limited Warranty Information Table"** at the end of this warranty or (b) the first person to whom the original purchaser transfers this warranty along with ownership of the structure on which the shingles are installed (either person described in (a) or (b), "Owner"). (For detail regarding transferring this warranty, please see **"Transferability of This Warranty"** below.)

What Is Covered

We warrant that your Owens Corning® shingles are free from any manufacturing defects that (1) materially affect the shingles' performance on your roof during the *TRU PROtection*® coverage period or (2) cause leaks during the balance of the applicable warranty period after the *TRU PROtection*® coverage period has expired. (To determine the length of the *TRU PROtection*® coverage period and the balance of the applicable warranty period, please see **"How Long Are You Covered"** below and the **"Limited Warranty Information Table"** at the end of this warranty.)

This warranty applies only to those shingles purchased after January 1, 2018 and before the date a later warranty applicable to the shingles comes into effect.

How Long Are You Covered

ALL IMPLIED WARRANTIES APPLICABLE TO YOUR SHINGLES ARE LIMITED IN DURATION TO THE TRU PROTECTION® COVERAGE PERIOD APPLICABLE TO SUCH SHINGLES, AS PROVIDED BY THIS WARRANTY, UNLESS A SHORTER PERIOD IS PERMITTED BY APPLICABLE LAW. SOME STATES OR PROVINCES DO NOT ALLOW LIMITATIONS ON HOW LONG AN IMPLIED WARRANTY LASTS, SO THE ABOVE LIMITATION MAY NOT APPLY TO YOU.

The length of your warranty depends on the type of Owens Corning® shingles you purchased. See the **"Limited Warranty Information Table"** at the end of this warranty for the specific warranty period that applies to your shingles.

1. *TRU PROtection*® Coverage Period—From the installation of the shingles through the *TRU PROtection*® coverage period, Owens Corning will compensate you for the cost, as reasonably determined by Owens Corning, to repair, replace or recover the defective shingles. Owens Corning reserves the right to arrange directly for the repair or replacement of your Products instead of compensating you directly. This compensation is limited as follows:
   A. If Owens Corning decides to replace the shingles, Owens Corning will compensate you only for the cost of replacement Owens Corning® shingles and the labor directly required to replace the defective shingles, both as reasonably determined by Owens Corning.
   B. If Owens Corning decides to repair or recover the shingles, Owens Corning will compensate you only for the cost of the labor directly required to repair or recover the defective shingles as reasonably determined by Owens Corning.
   C. *TRU PROtection*® coverage period does not apply to wind and algae coverage. Please see **"What About Wind Resistance"** and **"What About Algae Resistance"** below for applicable coverage.
2. Prorated Period—Once the *TRU PROtection*® coverage period for the Owens Corning® shingles purchased has expired, the prorated period will begin. During this prorated period, we will provide prorated compensation of

Pub. No. 10013920-L. Printed in U.S.A. January 2018. THE PINK PANTHER™ & © 1964–2018 Metro-Goldwyn-Mayer

Warranty on Roofing Shingles.

ferability.

the cost of the defective Owens Corning® shingles but no other costs (for example, the cost of labor) will be covered. We will prorate the amount of our compensation to you to adjust for the number of years of use you have enjoyed from the original installation date through the date of your claim. For example: If you have a 25-year warranty, and you make your claim anytime in the 15th year of the warranty, our compensation to you will be reduced by 14/25ths of the Owens Corning® shingle cost at the time of purchase. For lifetime shingle coverage (for as long as Owner owns the home on which the shingles are installed), see the **"Limited Lifetime^ Shingle Proration^ Table"**. Owens Corning reserves the right to arrange directly for the repair or replacement of your Products instead of compensating you directly.

3. Other Types of Structures—The coverage for all Owens Corning® shingles offered by this warranty depends on the structure on which the shingles are installed and the owner of the structure. Lifetime coverage for all Owens Corning® shingles applies only to single-family detached homes where the owner of the roof is the resident occupying the home. In the instance of shingles purchased or installed on property owned by others (for example, corporations, governmental agencies, partnerships, trusts, religious organizations, schools, condominiums, homeowners' association, or cooperative housing arrangements) or installed on any other structures (for example, apartment buildings or any other type of building or premises not used by individual homeowners as their residence), the warranty period for lifetime shingles will be 40 years from the original installation date of the shingles, and the *TRU PROtection®* coverage period will be five years. For lifetime shingle coverage (for as long as Owner owns the home on which the shingles are installed), see the **"Limited Lifetime^ Shingle Proration^ Table"**.

Limited Lifetime^ Shingle Proration^ Table

Structure/Owner	TRU PROtection® Period Years 1–10	Prorated Period Years 11–40	Prorated Period Years 41 and Beyond
Single family detached home owned by individuals	100%‡‡	80% reduced by 2% every year thereafter until year 40	20%
Structure/Owner	**Years 1–5**	**Years 6–40**	**Years 41 and Beyond**
Any other types of structures or owners	100%‡‡	87.5%^ reduced by 2.5% every year thereafter until year 40	No coverage

^ For as long as owner owns home.

‡‡ Of costs covered under this warranty.

^ Proration is calculated annually, based on the original installation date. There are no partial year prorations.

4. Exceptions—All of Owens Corning's obligations of compensation under this warranty (whether for repair, replacement, recovery or refunding a prorated portion of the cost of the defective shingles) are subject to the limitations provided by this warranty. Any replacement Owens Corning products will be warranted only for the remainder of the original warranty period. Owens Corning will not provide compensation for any underlayment, metalwork, flashings or other related work, and we will not compensate for the cost to remove or dispose of your shingles.
5. What About Wind Resistance—Your shingles contain asphalt sealant that requires direct warm sunlight for several days ("Thermal Sealing") in order to seal properly. If your shingles are installed during a period of cool weather, they may not adequately seal until the season changes or the weather warms, and if your shingles never receive direct sunlight or are not exposed to adequate surface temperatures, they may never achieve Thermal Sealing. Prior to your shingles achieving Thermal Sealing, your shingles are more vulnerable to blow-offs and wind damage. This is the fundamental nature of shingles and not a manufacturing defect, and we are not responsible for any blow-offs or wind damage that might occur prior to Thermal Sealing having occurred. After your shingles have achieved Thermal Sealing, however, they will be covered under this warranty if they experience blow-offs or wind damage in winds (including gusts) up to the levels and for the period from the original installation date ("Wind Warranty Period") listed in the **"Limited Warranty Information Table"** at the end of this warranty.

   HOWEVER, THE COVERAGE AGAINST SHINGLE BLOW-OFFS OR WIND DAMAGE IS IN EFFECT FOR A PERIOD OF 15 YEARS FOR LIFETIME SHINGLES AND FIVE YEARS FOR ALL OTHER SHINGLES FROM THE ORIGINAL DATE OF INSTALLATION.

Studios Inc. All Rights Reserved. The color PINK is a registered trademark of Owens Corning. © 2018 Owens Corning. All Rights Rese

Owens Corning will be liable only for the reasonable cost of replacing blown-off shingles (to include material and labor during the applicable *TRU PROtection*® warranty period) and the reasonable cost of manually sealing the unsealed shingles remaining on the roof.

Owens Corning is not responsible where the damage or blow offs are caused by damage to the underlying structure.

6. What About Algae Resistance—If the shingles that you purchased were not specifically labeled as "Algae Resistant" ("AR"), then any discoloration caused due to algae is not covered by this warranty as explained in **"What Is Not Covered"** below. However, if you did purchase AR shingles, they are covered for the period described in the **"Limited Warranty Information Table"** at the end of this warranty following the date of installation ("AR Warranty Period") against brown-black staining caused due to growth of cyanobacteria Gloeocapsa magma algae. We do not cover the effects of other growth, such as mold, lichen and green algae. If brown-black staining occurs during the AR Warranty Period, you will be entitled to the following remedy:
   A. Remedy for Algae Growth—If your AR shingles are discolored due to cyanobacteria algae growth during the first year of the AR Warranty Period, we will compensate you for the cost, including labor (such cost not to exceed the initial cost of the AR shingles plus the initial cost of installation), as reasonably determined by Owens Corning, to repair, replace or recover the affected AR shingles. For purposes of this AR shingle warranty, the term "repair" as used above refers to cleaning or otherwise removing any algae growth from affected AR shingles. Decisions regarding whether your AR shingles should be repaired, replaced or recovered will be made solely by Owens Corning.
   B. Proration—If your AR shingles have been installed longer than 1 year, labor will not be covered, and our compensation will be limited to a prorated amount of the original purchase price of the affected AR shingles. We will prorate your compensation to take into account the number of full years of use that you have enjoyed from the original installation date through the date of your claim. For example: If you make your claim anytime in the 4th year of the AR warranty and the AR Warranty Period is 10 years, our compensation to you will be in the amount of the original purchase price of the affected AR shingles, reduced by 3/10ths of the original purchase price of the affected AR shingles.

Transferability of This Warranty (Note: Based on Original Installation Date)

This warranty is not transferable except as follows: You may only transfer this warranty 1 time, anytime during the life of the warranty, to the purchaser of the structure on which the shingles are installed. For this warranty to transfer and the second Owner to obtain the benefits of this warranty, the second Owner must, within 60 days after the date of the real estate transfer, contact 1-800-ROOFING and submit together: (1) proof of purchase of the Owens Corning® shingles, and (2) the installation date and ownership history.

1. If the transfer takes place within the *TRU PROtection*® coverage period (see the **"Limited Warranty Information Table"**), the second Owner is entitled to the same coverage as the original Owner.
2. If the transfer occurs after the *TRU PROtection*® coverage period (see the **"Limited Warranty Information Table"**), the balance of the warranty period (other than the AR Warranty Period and Wind Warranty Period) will automatically be reduced to a 2-year period after the date of ownership change. If there is a manufacturing defect that causes leaks during this 2-year period, our compensation to the second Owner will be based only on the original cost of the defective shingles reduced by the amount of use the second Owner and the original Owner have enjoyed from the original installation date through the date of your claim.
3. The AR Warranty Period and Wind Warranty Period are fully transferrable. The second Owner will receive the balance of the coverage outlined in the **"Limited Warranty Information Table"** based upon the original installation date.

What Is Not Covered

Our warranty does not cover damage to the Owens Corning® shingles due to any cause not expressly covered in this warranty. After our shingles leave our manufacturing facility, they are subjected to conditions and handling beyond our control that could affect their performance. This warranty does not cover any problems with non-defective shingles caused by conditions or handling beyond our control. Some examples of conditions not covered by this warranty include:

erved.

1. Acts of God, such as hail, strong storms or winds (including gusts) over the maximum wind speed listed in the **"Limited Warranty Information Table"** at the end of this warranty, ice damming above the area covered by leak barriers or flashings or snow or water infiltration through exhaust vents.
2. Damage to or failure of the shingles as a result of damage to or the failure of the underlying roofing structure, or failure and/or rusting of roof nails.
3. Foot traffic on your roof or damage caused by objects (e.g., tree branches) falling on your roof.
4. Improper or faulty installation of your shingles—installation must be in accordance with our written installation instructions and comply with local building codes.
5. Shading, variations in the color of your shingles or discoloration caused by algae, fungi, lichen or cyanobacteria (unless covered under the section **"What About Algae Resistance"** above).
6. Damage caused by improper or inadequate roof ventilation or roof drainage, unvented attics or enclosed roof rafter assemblies. Some exceptions may apply. If you have questions, please contact us at 1-800-ROOFING.
7. Settlement of the structure of your property or buckling or cracking of the deck over which your shingles are installed.
8. Leaks caused by pre-existing conditions, structural failures or damaged areas on or near the roof that are not part of the roofing system, such as chimneys that have loose or cracked mortar, skylight seams or soil pipe boots that allow water to enter the structure or roofing system.
9. Damage to the shingles caused by alterations made after completion of application, including structural changes, equipment installation, power washing, painting or the application of cleaning solutions, coatings, or other modifications.
10. Any damage due to debris, resins or drippings from foliage.
11. Improper storage, handling or other conditions beyond our control.
12. Damages caused by, or the cost to repair or replace, any non-Owens Corning® shingles.
13. Improperly designed or installed gutter or downspout systems.
14. Any costs that you incur that are not authorized in advance by Owens Corning.

Replacement Shingle Variations

As a result of our ongoing efforts to improve and enhance our shingle product line, we must reserve the right to discontinue or modify our shingles, including their colors. We are not liable to you if you make a warranty claim in the future and any replacement shingles you receive vary in color either because of normal weathering or changes in our product line. You should understand that if we replace any of your shingles under this warranty, we reserve the right to provide you with substitute shingles that are comparable only in quality and price to your original shingles.

Compensation

Under the terms of this warranty, the manner of compensation is at Owens Corning's sole discretion and may be arranged by Owens Corning directly or issued in the form of cash settlement or material credit for Owens Corning® products to an existing supplier of Owens Corning® roofing materials. All costs must be pre-approved by Owens Corning.

Claims Process & Right of Inspection

To make a claim under this warranty, you must do so within 30 days after you discover the problem. To fully evaluate your claim, we may ask you to provide, at your expense, pictures of your shingles or shingle samples for us to test. You must do so in order to be eligible to make a claim under this warranty. To make a claim or if you have any questions, call us at 1-800-ROOFING or visit us at www.owenscorning.com/roofing. If you repair or replace your Owens Corning products before Owens Corning has made a determination on your claim, your claim may be denied. Owens Corning shall have a reasonable time after notification of a claim to inspect the roof. If requested by Owens Corning, the owner shall provide Owens Corning with reasonable access to the roof, during normal business hours, for the purpose of conducting an inspection of the roofing products.

No Modifications to This Warranty

The terms of this warranty may not be waived or modified (whether by a statement, omission, course of dealing or any act), except by a writing signed by an officer of Owens Corning or a licensed attorney in the Owens Corning legal department or

by the Owens Corning Technical Inspection Leader. Other than such an officer, attorney or technical inspection leader, nobody (regardless of whether an Owens Corning employee, a contractor, an installer or otherwise) has authority to act on behalf of Owens Corning (for example to waive or modify this warranty, to make representations or warranties or to undertake any liability). This warranty represents the entire agreement between the parties and replaces all other communications, warranties, representations and guarantees.

Mandatory Arbitration

To the extent permitted by applicable law, Owens Corning and you agree to arbitrate all disputes and claims arising out of or relating to this warranty or Owens Corning® shingles ("Dispute"). This warranty evidences a transaction in interstate commerce, and the Federal Arbitration Act governs the interpretation and enforcement of this provision. A party who intends to seek arbitration must first send to the other, by certified mail, a written notice of intent to arbitrate ("Notice"). The Notice to Owens Corning should be addressed to: One Owens Corning Parkway, Toledo, Ohio 43659 ("Arbitration Notice Address"). The Notice must (a) describe the nature and basis of the claim or dispute; and (b) set forth the specific relief sought ("Demand"). If the parties do not reach an agreement to resolve the claim within 30 days after Notice is received, you or Owens Corning may commence an arbitration proceeding. All issues are for the arbitrator to decide, including the scope of this arbitration clause, but the arbitrator is bound by the terms of this warranty. The arbitration shall be governed by the Commercial Dispute Resolution Procedures and the Supplementary Procedures for Consumer Related Disputes (collectively, "AAA Rules") of the American Arbitration Association ("AAA"), as modified by this warranty, and shall be administered by the AAA.

YOU AND OWENS CORNING HEREBY WAIVE THE RIGHT TO A TRIAL BY JURY.

The arbitrator may award injunctive relief only in favor of the individual party seeking relief and only to the extent necessary to provide relief warranted by that party's individual claim.

YOU AND OWENS CORNING MAY BRING CLAIMS AGAINST THE OTHER ONLY IN EACH PARTY'S INDIVIDUAL CAPACITY, AND NOT AS A PLAINTIFF OR CLASS MEMBER IN ANY PURPORTED CLASS OR REPRESENTATIVE PROCEEDING.

Further, you agree that the arbitrator may not consolidate proceedings of more than one person's claims, and may not otherwise preside over any form of a representative or class proceeding.

Governing Law and Forum

This warranty and all Disputes are governed by United States Federal laws and laws of Ohio. Subject to the "Arbitration" provision in this warranty, if there are any Disputes that cannot be arbitrated, then the parties consent to the exclusive jurisdiction and venue of the state and federal courts in Ohio with respect to such Disputes.

Savings and Severability

To the extent that this warranty is inconsistent with applicable law, this warranty is hereby modified to be consistent with such applicable law. If an arbitrator or court determines that any term in this warranty is illegal or unenforceable, the parties intend for the arbitrator or court to interpret or modify this warranty to effect the original intent of the parties as closely as possible while rendering the term and this warranty fully legal and enforceable. If a term in this warranty cannot be rendered legal and enforceable accordingly, the parties intend for the arbitrator or court to sever the illegal or unenforceable term from this warranty, leaving the remainder of this warranty enforceable.

Limitations

THIS WARRANTY IS YOUR EXCLUSIVE WARRANTY FROM OWENS CORNING AND REPRESENTS THE SOLE REMEDY TO ANY OWNER OF OWENS CORNING® SHINGLES. OWENS CORNING MAKES NO OTHER REPRESENTATIONS, WARRANTIES OR GUARANTEES OF ANY KIND OTHER THAN THOSE STATED EXPLICITLY IN THIS WARRANTY.

YOUR REMEDY FOR DEFECTIVE SHINGLES IS FULLY DESCRIBED IN THE ABOVE SECTION, **"HOW LONG ARE YOU COVERED"**. YOU ARE NOT ENTITLED TO ANYTHING MORE THAN WHAT IS DESCRIBED IN THAT SECTION UNLESS OTHERWISE COVERED BY AN OPTIONAL OWENS CORNING ENHANCED WARRANTY. OWENS CORNING HAS NO REASON TO KNOW ANY PARTICULAR PURPOSE FOR WHICH YOU ARE BUYING SHINGLES.

OWENS CORNING IS NOT RESPONSIBLE FOR ANY INCIDENTAL, CONSEQUENTIAL, SPECIAL, PUNITIVE, OR OTHER DAMAGES OF ANY KIND, INCLUDING DAMAGE TO YOUR STRUCTURE OR TO YOUR STRUCTURE'S CONTENTS, WHETHER FOR BREACH OF THIS WARRANTY, NEGLIGENCE, STRICT LIABILITY OR OTHER CLAIMS DERIVED IN TORT OR FOR ANY OTHER CAUSE.

SOME STATES OR PROVINCES DO NOT ALLOW THE EXCLUSION OR LIMITATION OF INCIDENTAL OR CONSEQUENTIAL DAMAGES, SO THE ABOVE LIMITATION OR EXCLUSION MAY NOT APPLY TO YOU.

FOR CANADA ONLY — The terms in this warranty, except to the extent lawfully permitted, do not exclude, restrict, or modify but are in addition to any provincial laws.

Limited Warranty Information Table

	Warranty Length	TRU PROtection® Coverage Period	Wind Warranty Protection	Wind Warranty Period	AR[1] Warranty Period
Berkshire®†	Lifetime[Δ]	10 YRS	130 MPH	15 YRS	15 YRS
Devonshire®	Lifetime[Δ]	10 YRS	130 MPH	15 YRS	10 YRS
Woodmoor®	Lifetime[Δ]	10 YRS	110/130 MPH**	15 YRS	10 YRS
Woodcrest®	Lifetime[Δ]	10 YRS	110/130 MPH**	15 YRS	10 YRS
WeatherGuard® HP†	Lifetime[Δ]	10 YRS	110/130 MPH***	15 YRS	10 YRS
Duration® Series††	Lifetime[Δ]	10 YRS	130 MPH	15 YRS	10 YRS
Oakridge®†††	Lifetime[Δ]	10 YRS	110/130 MPH***	15 YRS	10 YRS
Supreme®	25 YRS	5 YRS	60 MPH	5 YRS	10 YRS
Classic®	20 YRS	3 YRS	60 MPH	5 YRS	

[Δ] For as long as owner owns home.

† Berkshire® Hip & Ridge is required for 15-year Algae Resistance Limited Warranty.

†† Includes TruDefinition® Duration®, TruDefinition® Duration STORM®,‡ TruDefinition® Duration® Designer Colors Collection, TruDefinition® Duration MAX®, TruDefinition® Duration® COOL, Duration® Premium Cool and Duration® Premium shingles.

††† Includes TruDefinition® Oakridge® Shingles.

‡ WeatherGuard® HP Shingles require WeatherGuard® HP Hip & Ridge Shingles and TruDefinition® Duration STORM® Shingles require ProEdge STORM® Hip & Ridge Shingles to complete a UL 2218, Class IV impact-resistant roof system.

** 130 MPH is applicable only with Owens Corning® Starter Shingle products application along eaves and rakes in accordance with installation instructions.

*** 110 MPH is standard with 4-nail application. 130 MPH is applicable only with 6-nail application and Owens Corning® Starter Shingle products application along eaves and rakes in accordance with installation instructions.

1 AR is available regionally. Visit www.owenscorning.com/roofing for availability in your zip code.

NOTE: When properly installed, Owens Corning® Hip & Ridge shingle warranty terms will match with the corresponding roofing shingle. (See specific Owens Corning® Hip & Ridge shingle installation instructions for details.)

Name of Contractor _____ Date of Installation _____

Address _____

City _____ State _____ ZIP _____

Phone Number _____

Warranty Registration & Transfer Information

TO REGISTER THIS WARRANTY:

Visit our website at:
http://www.owenscorning.com/roofing/warranty-101
Click on Register a Standard Product Limited Warranty

The following information is required for registration:

Original Installation Date _____

Original Purchaser's Name _____

Owens Corning® Shingle Name/Color Installed _____

Number of Squares Installed _____

Address of Property _____

_____

_____

Note: *Please retain proof of purchase and installation date with your important records in the event that you choose to transfer this warranty in the future, or upload these documents as you register this warranty online.*

TO TRANSFER THIS WARRANTY:

See **TRANSFERABILITY OF THIS WARRANTY** for exceptions.

Contact 1-800-ROOFING

For this warranty to be transferred, the second Owner must contact 1-800-ROOFING within sixty (60) days after the date of the real estate transfer to obtain the benefits of this warranty. And must have the following:

(1) Proof of purchase of the Owens Corning® Roofing System and

(2) The installation date and ownership history

For more information, call 1-800-GET-PINK® or visit our website at: www.owenscorning.com/roofing.

©2018 Owens Corning. All Rights Reserved.

OWENS CORNING
ROOFING AND ASPHALT, LLC
ONE OWENS CORNING PARKWAY
TOLEDO, OHIO, USA 43659

1-800-GET-PINK®
www.owenscorning.com/roofing

Pub. No. 10013920-L. Printed in U.S.A. January 2018.
THE PINK PANTHER™ & © 1964–2018 Metro-Goldwyn-Mayer Studios Inc. All Rights Reserved. The color PINK is a registered trademark of Owens Corning. © 2018 Owens Corning. All Rights Reserved.

OWENS CORNING®
INNOVATIONS FOR LIVING®

Oakridge® Shingles

featuring *Artisan Colors*

Oakridge® Artisan Color
Flagstone†

Oakridge® Shingles

Make it your own.

When does a house become a home? When the place you live in begins to reflect the life you're living. When every change, both big and small, makes it more and more your own. Choosing a new roof is your opportunity to make a major impact on the look of your home – and we're here to help. Owens Corning has been a leader in the building materials industry for over 70 years. So you can be confident that your new roof will enhance and help protect your home for years to come.

The Right Choice.™

Oakridge® Shingles are The Right Choice™ for long-lasting performance and striking beauty. In addition to a wide range of inviting, popular colors, they also offer:

- Limited Lifetime Warranty*/‡ (for as long as you own your home)
- 110-/130**-MPH Wind Resistance Limited Warranty*
- Algae Resistance Limited Warranty*

Oakridge®

Artisan Colors

At Owens Corning Roofing, we're always looking for ways to help you express your sense of style through your home, which is why we've expanded the Oakridge® color palette with these inspiring selections.

Your home is your canvas.

Oakridge® Artisan Colors are specially designed to provide a unique blend of artistry and craftsmanship that will give your home a look that is anything but ordinary. Blacks and grays are rich and warm, earth tones capture the vibrancy of nature's brightest hues, and bold color combinations help enhance a wide variety of exterior accents and landscaping. Plus, every Oakridge® Artisan Color features greater contrast and color depth to add drama and curb appeal to your entire home.

Oakridge® Artisan Color
Aged Cedar†

Traditional favorites that feel like home.

Oakridge® Color Availability

Amber†
Not Available in Service Area 8 or 11 (see map).

Onyx Black†

Desert Tan†

Estate Gray†

Brownwood†

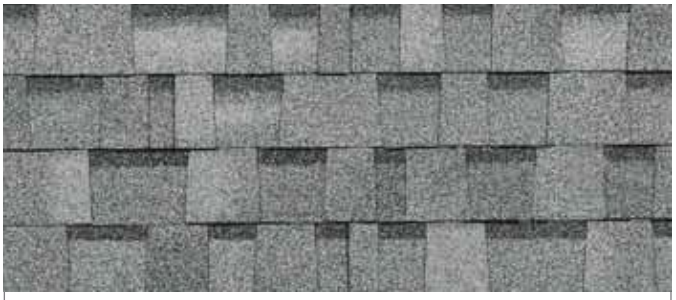

Sierra Gray†
Not Available in Service Area 8 or 11 (see map).

Teak†

Shasta White†

Driftwood†

Chateau Green†

Oakridge® Artisan Color
Peppermill Gray†

Enhanced colors and bold designs.

Oakridge® Artisan Colors

Aged Cedar†

Sand Castle†

Flagstone†

Twilight Black†

Peppermill Gray†

Color Availability Map

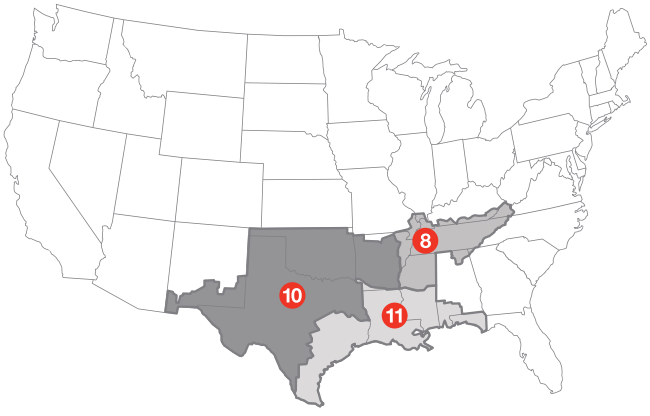

ENERGY STAR® is for roofs too.

Similar to the energy-efficient appliances in your home, roofing products can provide energy-saving qualities. Owens Corning™ Oakridge® Roofing Shingles in Shasta White can help reduce your energy bills when installed properly. These shingles reflect solar energy, decreasing the amount of heat transferred to a home's interior – and the amount of air conditioning needed to keep it comfortable. Actual savings will vary based on geographic location and individual building characteristics. Call 1-800-GET-PINK® or 1-888-STAR-YES for more information.

Product Attributes

Warranty Length*

Limited Lifetime‡ (for as long as you own your home)

Wind Resistance Limited Warranty*

110/130** MPH

Algae Resistance Limited Warranty*

10 Years

Tru PROtection® Non-Prorated Limited Warranty* Period

10 Years

Oakridge® Shingles Product Specifications

Nominal Size	13¼" x 39⅜"
Exposure	5⅝"
Shingles per Square	64
Bundles per Square	3
Coverage per Square	98.4 sq. ft.

Applicable Standards and Codes

ASTM E 108, Class A Fire	ASTM D 3462
ASTM D 3161, Class F Wind	ASTM D 228
ASTM D 7158, Class H Wind	UL 790, Class A
ASTM D 3018, Type 1	

The perfect finishing touch.

Owens Corning™ Roofing Hip & Ridge Shingles do more than just deliver added protection to the most vulnerable areas of your roof – they enhance the roofline and help define the character of your entire home.

Don't accept a generic substitute. Be sure to choose the right Owens Corning™ Roofing Hip & Ridge style and specially matched color to provide the perfect finishing touch to your new roof.

Oakridge®
Desert Tan†

Total Protection Roofing System™[1]

Working together to help protect and enhance your home.

It takes more than just shingles to protect your home. The Total Protection Roofing System™[1] is made up of all the essential Owens Corning™ Roofing components and layers that are designed to work together to maximize your roof's performance and durability. High-quality shingles and underlayment products help guard against the weather outside, while ventilation products help balance air flow to control temperature and humidity inside the attic.

The Total Protection Roofing System™[1] is designed to give you the assurance that all of your Owens Corning™ Roofing components are working together to maximize the performance of your new roof – and to enhance the comfort and enjoyment of those who live beneath it.

a VentSure® Ventilation Products
Help protect a roof from premature failure by helping remove heat and moisture from the attic.

b PINK® Fiberglas™ Blown-In Insulation
Tiny air pockets trapped in the insulation resist the passage of heat flow.

c Owens Corning™ Hip & Ridge Shingles
Help protect the ridge vent and add an attractive, finished look to a roof's hips and ridges.

d Owens Corning™ Shingles
Add durable beauty to a home. Shingles are the first line of defense against the elements.

e Owens Corning™ Underlayment Products
Add an extra layer of protection between the shingles and the roof deck to help prevent damage from wind-driven rain.

f WeatherLock® Self-Sealing Ice & Water Barrier Products
Help guard vulnerable areas where water can do the most damage to a roof: eaves, valleys, dormers and skylights.

g Owens Corning™ Starter Shingle Products
The first step in the proper installation of shingles.

h Owens Corning™ Undereave Ventilation Products
Help prevent moisture buildup in the attic by working with ridge vents to keep air moving.

i Illuminator™ Tube Skylight
A smart choice for bringing natural light into the home.

1 Excludes non-Owens Corning™ Roofing Products such as flashing, fasteners and wood decking.

Home sweet home.

Owens Corning Roofing wants to help make your purchase of a new roof a positive experience. Not only can we help you choose the right shingle and roofing system components, but we can also help you select the right contractor for the job. Don't worry – we know this is a big decision. We're here to help you feel confident about choosing our roofing products. After all, we're America's #1 roofing brand[2] for a reason.

Oakridge® Artisan Color
Flagstone†

Want design assistance or more information about Owens Corning™ Roofing products? Or want to find an Owens Corning™ Roofing Preferred Contractor network member?

It's easy to reach us:

1-800-GET-PINK®
www.roofing.owenscorning.com

* See actual warranty for complete details, limitations and requirements.

** 130 MPH is applicable only with 6-nail application and Owens Corning™ Starter Shingle product application in eaves and rakes in accordance with installation instructions.

† Owens Corning strives to accurately reproduce photographs of shingles. Due to manufacturing variances, the limitations of the printing process and the variations in natural lighting, actual shingle colors and granule blends may vary from the photo. The pitch of your roof can also impact how a shingle looks on your home. We suggest that you view a roofing display or several shingles to get a better idea of the actual color. To accurately judge your shingle and color choice, we recommend that you view it on an actual roof with a pitch similar to your own roof prior to making your final selection. Color availability subject to change without notice. Ask your professional roofing contractor for samples of colors available in your area.

‡ 40-year Limited Warranty on commercial projects.

2 Based on *2011 Roofing Brand Awareness Survey* by Owens Corning Roofing & Asphalt LLC.

ENERGY STAR and the ENERGY STAR mark are registered trademarks of the U.S. Environmental Protection Agency.

OWENS CORNING
ROOFING AND ASPHALT, LLC
ONE OWENS CORNING PARKWAY
TOLEDO, OHIO, USA 43659

1-800-GET-PINK®
www.roofing.owenscorning.com

Pub. No. 10017747. Printed in U.S.A. November 2012. THE PINK PANTHER™ & © 1964–2012 Metro-Goldwyn-Mayer Studios Inc. All Rights Reserved. The color PINK is a registered trademark of Owens Corning. © 2012 Owens Corning. All Rights Reserved.

Owens Corning™ Roofing Preferred Contractors are independent contractors and are neither affiliates nor agents of Owens Corning Roofing & Asphalt , LLC, or its affiliated companies.

(Houston, Irving, Memphis)

"Let the fresh air in and keep the pests out!"

The Bug Blocker® Industrial Screen Door Engineering Specifications

Print This Page (industrial-screen-door-engineering-specs)

To Provide a Bug Blocker® Industrial Screen Door for both ventilation and security. The industrial screen door is to be retrofitted into existing doorways and use 304 Stainless Steel Screen to withstand the industrial environment.

Specifications:

Under normal circumstances the door shall be under 4' wide and 14' tall. There will be a kick plate for the bottom, perimeter seal for the two sides and top, one handle and a bottom brush seal. There is a choice of piano hinge or spring loaded hinges.

Frame:

The frame shall be aluminum alloy 6063-T6 mill finish, with stainless steel screen permanently attached. Frames shall be aluminum extrusion, and shall be 1" x 1-1/4" wide with internal steel corners and 3/16" pins.

Screen:

The screening shall be 304 stainless steel in either of the following configurations:

	Mesh	Wire Diameter	Opening Size	Free Area
Standard	12x12	0.023″	0.0603 in. sq.	51.8%
Fine	30x30	0.011″	0.0223 in. sq.	44.8%

MEETS FEDERAL SPECIFICATION STANDARD A-A-1037B DATED APRIL 19, 1990 FOR TYPE I, CLASS I WIRE FABRIC.

MEETS THE ASTM STANDARD SPECIFICATION FOR INDUSTRIAL WIRE CLOTH AND SCREENS, DESIGNATION E 437-85.(Revised 5/2010)

The screen shall be the Bug Blocker® as produced by Rasco Industries, Inc. or approved equal.

Interested in learning more about our security screens and bird screen (service-door-inserts) products? Watch our product videos (product-videos) or contact us (contact-us) today and we will be happy to provide you more information about the overhead security doors (overhead-screen) we offer.

(quote-order-survey-forms)

Survey Forms

Overhead Screen Door (overhead-screen)

Chain-Link Security Door (chainlink-security)

Service Door Screen Insert (service-door-inserts)

Behind Rolling Screen Door (behind-rolling-steel)

Expanded Metal Security Door (expanded-metal)

Fixed-In-the-Opening Screen Panels (fixed-in-the-opening-screen-panels)

Air Inlet / Louver Screen Panel (air-inlet-screen)

Industrial Screen Door (industrial-screen-door)

Security & Food Safety Standards (food-safety-standards)

Product Videos (product-videos)

Concession Stand (concession-stand)

Installation Instructions (installation-instructions)

Bird & Rodent Solutions (bird-rodent-blocking)

Dealer Section (dealer)

©2018 Rasco Industries, Inc. | 5310 Shoreline Drive, Mound MN 55364 | Phone: 800.537.3802 or 763.479.1144 | Fax: 763.479.1147 or 952.283.1261

Terms and Conditions (https://www.bugblocker.com/terms-and-conditions) | Site Created By: Ecreativeworks (https://www.ecreativeworks.com/)

UL Evaluation Report

UL ER2453-01

Issued: August 2, 2013
Revised: January 30, 2015

Visit UL's On-Line Certifications Directory: www.ul.com/erdirectory
for current status of Report.

UL Category Code: ULEZ

CSI MasterFormat®
DIVISION: 07 00 00 – THERMAL AND MOISTURE PROTECTION
Sub-level 2: 07 30 00 – Steep Slope Roofing
Sub-level 3: 07 31 00 – Shingles and Shakes
Sub-level 4: 07 31 13 – Asphalt Shingles

COMPANY:

OWENS CORNING
ONE OWENS CORNING PKY
TOLEDO, OH 43659
(419) 248-7060
http://www.owenscorning.com/

1. SUBJECT: Asphalt Shingles

CLASSIC®, SUPREME®

DURATION® PREMIUM, TRUDEFINITION® DURATION®, TRUDEFINITION® DURATION® STORM™, TRUDEFINITION® DURATION® MAX™, TRUDEFINITION® OAKRIDGE®, OAKRIDGE®, WOODCREST®, WOODMOOR®, TRUDEFINITION® WEATHERGUARD® HP, BERKSHIRE®, DEVONSHIRE™

WOODSTART® STARTER SHINGLE, STARTER STRIP PLUS, STARTER STRIP SHINGLE, AND TRI BUILT STARTER STRIP

BERKSHIRE® HIP & RIDGE SHINGLES, HIGH RIDGE HIP & RIDGE SHINGLES WITH SEALANT, RIZERIDGE® HIP & RIDGE SHINGLES WITH SEALANT, WEATHERGUARD® HP HIP & RIDGE SHINGLES, PROEDGE®, DURARIDGE™ HIP & RIDGE SHINGLES AND PROEDGE® STORM® HIP & RIDGE SHINGLES

2. SCOPE OF EVALUATION

- 2012, 2009, and 2006 *International Building Code* ® (IBC)
- 2012, 2009, and 2006 *International Residential Code* ® (IRC)
- ICC ES Acceptance Criteria for Quality Documentation (AC10), Dated December 2012
- ICC ES Acceptance Criteria for Alternative Asphalt Roofing Shingles (AC438), Dated March 2012

The products were evaluated for the following properties:

- External Fire Exposure (ANSI/UL790, ASTM E108)
- Wind Resistance (ASTM D3161; ASTM D7158)
- Physical Properties (ASTM D3462, ICC-ES AC438)

3. REFERENCED DOCUMENTS

- ANSI/UL790 (ASTM E108), Standard Test Methods for Fire Tests of Roof Coverings
- ASTM D3161, Standard Test Method for Wind-Resistance of Steep Slope Roofing Products (Fan-Induced Method)
- ASTM D7158, Standard Test Method for Wind Resistance of Asphalt Shingles (Uplift Force/Uplift Resistance Method)
- ASTM D3462, Standard Specification for Asphalt Shingles Made from Glass Felt and Surfaced with Mineral Granules
- UL Subject 2375, Outline of Investigation for Hip and Ridge Shingles (UL Fire and Wind Tests)
- ICC-ES Acceptance Criteria for Alternative Asphalt Roofing Shingles (AC438), Dated March 2012

4. USES

OWENS CORNING asphalt shingles are used as roof coverings for new and existing roofs.

5. PRODUCT DESCRIPTION

OWENS CORNING asphalt shingles are roof covering materials complying with the following properties when installed as described in this report and as shown in illustrations for application instructions which accompany each bundle of shingles. The products are three-tab shingles, laminated shingles and hip & ridge shingles. The products are available in standard and metric sizes.

Fire Classification: OWENS CORNING asphalt shingles covered under this Report have been tested for fire classification Class A in accordance with UL790 (ASTM E108). Shingles tested in accordance with UL790 (ASTM E108) qualify for use under Section 1505.1 of the 2012, 2009 and 2006 IBC and Section R902.1 of the 2012, 2009 and 2006 IRC.

Wind Resistance: OWENS CORNING asphalt shingles covered under this Report have been tested for wind resistance in accordance with ASTM D3161 or ASTM D7158.

Shingles tested in accordance with ASTM D3161 are classified as Class F or Class A and qualify for use under the exception to Section 1507.2.7.1 of the 2012, 2009 and 2006 IBC, or the exception to Section R905.2.4.1 of the 2012, 2009 and 2006 IRC.

Shingles tested in accordance with ASTM D7158 are classified as Class H and qualify for use in locations as shown in Table 1507.2.7.1 of the 2012 and 2009 IBC or Table R905.2.4.1 of the 2012 and 2009 IRC, where the maximum basic wind speed is 150 mph (67 m/s) or less with exposure category of B or C (ASCE 7) and a maximum building height of 60 feet (18.3 m). Installation must be in accordance with Section 1507.2.7 of the 2012, 2009 and 2006 IBC or Section R905.2.6 of the 2012, 2009 and 2006 IRC, as applicable.

Physical Properties: OWENS CORNING asphalt shingles covered under this Report have been tested for physical properties in accordance with ASTM D3462. Shingles tested in accordance with ASTM D3462 qualify for use under Section 1507.2.5 of the 2012, 2009 and 2006 IBC or Section R905.2.4 of the 2012, 2009 and 2006 IRC. Shingles have also been evaluated in accordance with ICC-ES Acceptance Criteria, AC438. When installed on new construction in accordance with this report and the OWENS CORNING installation instructions, the shingles are a Class A fire classification roof covering. When the shingles are installed over existing roof coverings, the fire classification is maintained.

5.1 Three-Tab Shingles – Classic®, and Supreme®:

Classic® and Supreme® shingles are three-tab shingles manufactured with a single fiberglass mat, coated on both sides with asphalt, and surfaced on the weather-exposed side with mineral granules. The shingles are self-sealing and have a continuous bead of thermal-tab sealing adhesive above the shingle butt on the weather side. The shingles are self-sealing and have a dashed bead of thermal-tab sealing adhesive above the shingle butt on the weather side.

5.2 Five-Tab Shingles - Devonshire™

Devonshire™ shingles are five-tab shingles manufactured with a single fiberglass mat, coated on both sides with asphalt, and surfaced on the weather-exposed side with mineral granules. The shingles are self-sealing and have a dashed bead of thermal-tab sealing adhesive above the shingle butt on the weather side.

5.3 Laminated Shingles – Duration® Premium, TruDefinition® Duration®, TruDefinition® Duration® Storm, TruDefinition® Duration® MAX, TruDefinition® Oakridge®, Oakridge®, Woodcrest®, Woodmoor®, TruDefinition® WeatherGuard® HP, Berkshire®:

Duration® Premium, TruDefinition® Duration®, TruDefinition® Duration® Storm, TruDefinition® Duration® MAX, Oakridge®, Woodcrest®, Woodmoor®, TruDefinition® WeatherGuard® HP, Berkshire® shingles are laminated shingles manufactured with 2 layers of fiberglass mat coated with asphalt on both sides, and surfaced on the weather-exposed side with mineral granules.

5.4 Hip & Ridge Shingles – Berkshire® Hip & Ridge Shingles, High Ridge Hip & Ridge with Sealant, ProEdge®, ProEdge® Storm®, WeatherGuard® HP, DuraRidge™ Hip and Ridge Shingles, and RIZERidge® Hip and Ridge shingles with Sealant:

Berkshire® Hip & Ridge Shingles, High Ridge Hip and Ridge Shingles with Sealant, ProEdge®, ProEdge Storm™, WeatherGuard® HP, DuraRidge™ Hip and Ridge Shingles and RIZERidge® Hip and Ridge shingles with Sealant are prefabricated hip and ridge shingles. ProEdge Storm™ and WeatherGuard® HP hip and ridge shingles are perforated so they can be torn into three 12 inch by 12 inch (305 mm by 305 mm) shingles. ProEdge® hip and ridge shingles and RIZERidge® Hip and Ridge shingles with Sealant are perforated so they can be torn into three 12 inch by 12 inch (305 mm by 305 mm) shingles for standard , or four 13-¼ inch by 9-$^{27}/_{32}$ inch (337 mm by 250 mm) shingles for metric.

5.5 Starter Shingles - Starter Strip, Starter Strip Plus, Woodstart Starter Shingle, and Tri-Built Starter Strip

Starter Strip, Starter Strip Plus, Woodstart Starter Shingle, and Tri-Built Starter Strip are prefabricated starter course shingles with factory applied sealant. Starter Strip and Tri-Built Starter Strip are 6-5/8” x 39-3/8”. Starter Strip Plus and Tri-Built Starter Strip are 7-3/4” x 13-3/8”. Woodstart Starter Shingles are 13-3/8” x 40”.

6. INSTALLATION

OWENS CORNING asphalt shingles must be installed in accordance with the applicable code, this report, and the manufacturer’s published installation instructions. The shingles must be installed in accordance with Section 1507.2 of the 2012, 2009 and 2006 IBC or Section R905.2 of the 2012, 2009 and 2006 IRC, as applicable, except as noted in this report.

The manufacturer's published installation instructions must be available at all times on the jobsite during installation.

Minimum roof slopes must be 2:12 (16.67% slope or 9º) for the three-tab shingles described in section 5.1 and for the laminated shingles described in section 5.3 of this Report.

6.1 Underlayment and Ice Barriers:

For roof slopes greater than 4:12 (33.33% slope or 18º), the roof deck must be covered with a minimum of one layer of underlayment as described in Sections 7.2 and 7.3 of this Report. Underlayment application must be in accordance with Section 1507.2.8 of the 2012, 2009 and 2006 IBC or Section R905.2.7 of the 2012, 2009 and 2006 IRC, as applicable.

Roofs having slopes between 2:12 (16.67% slope or 9º) and 4:12 (33.33% slope or 18º) require two layers of the underlayment as described in Sections 7.2 and 7.3 of this Report. Underlayment application must be in accordance with Section 1507.2.8 of the 2012, 2009 and 2006 IBC or Section R905.2.7 of the 2012, 2009 and 2006 of the IRC, as applicable.

In areas where there has been a history of ice forming along the eaves, causing a backup of water, as indicated by Table R301.2 (1), an ice barrier must be provided in accordance with Section 1507.2.8.2 of the 2012, 2009 and 2006 IBC or Section R905.2.7.1 of the 2012, 2009 and 2006 IRC, as applicable.

6.2 Starter Shingle:

A starter course, as described in Section 7.4 of this Report, must be attached to the eave edge using fasteners described in Section 7.5 of this Report, located 1-½ – 3 inches (38 – 76 mm) from the eave edge and spaced 8 – 10 inch (203 – 254 mm) apart, for a total of five fasteners per shingle. The starter strip must overhang the eaves and rake edges by ¼ – ¾ inch (6 – 19 mm).

6.3 Asphalt Shingles:

The first course of field shingles must be installed over the starter course described in Section 7.4 of this Report.

Standard three-tab shingles must be installed with vertical joints offset 4 inches (102 mm), 5 inches (127 mm), or 6 inches (152 mm) from adjacent courses and metric-sized three-tab shingles must be installed with a 6-9/16 inch (167 mm) offset or any repeatable offset pattern greater than 4 inches (102 mm).

Duration® Premium, TruDefinition® Duration®, TruDefinition® Duration® Storm™, TruDefinition® Duration® MAX, TruDefinition® Oakridge®, Oakridge®, and TruDefinition® WeatherGuard® HP must be installed with a 6-½ inch (165 mm) offset or any repeatable offset pattern greater than 4 inches (102 mm).

The Berkshire® shingles must be installed with a 4-$^{3}/_{4}$ inch (121 mm) offset.

Woodcrest® and Woodmoor® must be installed with a 5 and 5 inch (127 and 127 mm) or a 5 inch and 15 inch (127 and 381 mm) offset.

End joints must be a minimum of 2 inches (51 mm) from a fastener in the shingle below. Offset patterns between courses may vary provided side laps are a minimum of 4 inches (102 mm) in succeeding courses.

6.3.1 Three-Tab Shingles – Classic®, and Supreme®:

For roof slopes of 2:12 up to 21:12 (16.67% or 9º up to 175% or 60º), each shingle must be fastened to the roof deck using a minimum of four fasteners.

For roof slopes over 21:12 (175% or 60º), six fasteners must be used and four 1 inch diameter spots of asphalt plastic cement per shingle (2 inches up from the bottom edge).

Fasteners must be located above the top of the cut-out and below the sealant strip, $^{5}/_{8}$ inch (16 mm) above the tab cut-out.

Maximum exposure to the weather must be 5 inches or 5-$^{5}/_{8} \pm {}^{1}/_{8}$ inches (127 or 143 ± 3 mm). In colder climates or wind regions where it is questionable whether the thermal-sealing adhesive will activate to seal the shingles, the shingles can be hand-sealed. A 1-in diameter (25.4 mm) spot of asphalt cement complying with ASTM D4586, Type I, Class I, should be placed under the corner (1 – 2 inches (25 – 51 mm) from each end) of each tab (two spots per tab).

6.3.2 Five-Tab Shingles – Devonshire™:

For roof slopes of 2:12 up to 21:12 (16.67% or 9º up to 175% or 60º) each shingle must be fastened to the roof deck using a minimum of six fasteners.

For roof slopes over 21:12 (175% or 60º), six fasteners must be used, and ten 1 inch diameter spots of asphalt plastic cement per shingle and two spots of asphalt plastic cement under each shingle tab.

Fasteners must be located 6-$^{1}/_{8}$ inches (157 mm) above the butt edge of the shingles.

Maximum exposure to the weather must be 5-$^{5}/_{8} \pm {}^{1}/_{8}$ inches (143 ± 3 mm).

In colder climates or wind regions where it is questionable whether the thermal-sealing adhesive will activate to seal the shingles, the shingles can be hand-sealed. Two, 1-inch diameter (25.4 mm) spots of cement should be placed under each shingle (Ten per shingle).

6.3.3 Laminated Shingles – Duration® Premium, TruDefinition® Duration®, TruDefinition® Duration® Storm, TruDefinition® Duration® MAX:

For roof slopes of 2:12 up to 21:12 (16.67% or 9º up to 175% or 60º), each shingle must be fastened to the roof deck using a minimum of four fasteners.

For roof slopes over 21:12 (175% or 60º), six fasteners must be used.

Fasteners must be located 6-$^{1}/_{8}$ inches (157 mm) above the butt edge of the shingles (center of the SureNail® fastening area).

Maximum exposure to the weather must be 5-$^{5}/_{8} \pm {}^{1}/_{8\ \text{inch}}$ (143 ± 3 mm)

In colder climates or wind regions where it is questionable whether the thermal-sealing adhesive will activate to seal the shingles, the shingles can be hand-sealed. Four, 1-inch diameter (25.4 mm) spots of cement should be placed under the exposed portion of the shingle, spaced 1 – 2 inches (25 – 51 mm) from each end of the shingle and two spots must be evenly spaced in between.

6.3.4 Laminated Shingles – Oakridge® and TruDefinition® Oakridge®:

For roof slopes of 2:12 up to 21:12 (16.67% or 9º up to 175% or 60º), each shingle must be fastened to the roof deck using a minimum of four fasteners.

For roof slopes over 21:12 (175% or 60º), six fasteners must be used, and four 1 inch diameter spots of asphalt plastic cement per shingle (2 inches up from the bottom edge).

Fasteners must be located 6-$^{1}/_{8}$ inches (157 mm) above the butt edge of the shingles.

Maximum exposure to the weather must be 5-$^{5}/_{8} \pm {}^{1}/_{8}$ inches (143 ± 3 mm)

In colder climates or wind regions where it is questionable whether the thermal-sealing adhesive will activate to seal the shingles, the shingles can be hand-sealed. Four, 1-inch diameter (25.4 mm) spots of cement should be placed under the exposed portion of the shingle, spaced 1 – 2 inches (25 – 51 mm) from each end of the shingle and two spots must be evenly spaced in between.

6.3.5 Laminated Shingles – Berkshire®:

For roof slopes of 2:12 up to 21:12 (16.67% or 9º up to 175% or 60º), each shingle must be fastened to the roof deck using a minimum of five fasteners.

For roof slopes over 21:12 (175% or 60º), six fasteners must be used and four 1 inch diameter spots of asphalt plastic cement per shingle and one spot of asphalt under each shingle tab, center of the shingle tab and 2 inches up from the bottom edge.

Fasteners must be located above the top of the cut-out and below the sealant strip, $^{5}/_{8}$ inch (16 mm) above the tab cut-out.

Maximum exposure to the weather must be 8-$^{3}/_{8} \pm {}^{1}/_{8}$ inch (213 ± 3 mm).

In colder climates or wind regions where it is questionable whether the thermal-sealing adhesive will activate to seal the shingles, the shingles can be hand-sealed. A 1-inch diameter (25.4 mm) spot of asphalt cement complying with ASTM D4586, Type I, Class I, should be placed under the corner 1 – 2 inches (25 – 51 mm) from each end of each tab (two spots per tab).

6.3.6 Laminated Shingles – Woodcrest® and Woodmoor®:

For roof slopes of 2:12 up to 21:12 (16.67% or 9º up to 175% or 60º), each shingle must be fastened to the roof deck using a minimum of five fasteners.

For roof slopes over 21:12 (175% or 60º), nine fasteners must be used, and four, 1 inch diameter spots of asphalt plastic cement per shingle and one spot of asphalt under each shingle tab, center of the shingle tab and 2 inches up from the bottom edge.

Fasteners must be located in the center of the SureNail® fastening area.

Maximum exposure to the weather must be 4 ± $^{1}/_{8}$ inches (102 ± 3 mm).

In colder climates or wind regions where it is questionable whether the thermal-sealing adhesive will activate to seal the shingles, the shingles can be hand-sealed. A 1-inch diameter (25.4 mm) spot of asphalt cement complying with ASTM D4586, Type I, Class I, should be placed under the corner 1 – 2 inches (25 – 51 mm) from each end of each tab (two spots per tab).

6.3.7 Laminated Shingles – TruDefinition® WeatherGuard® HP:

For roof slopes of 2:12 up to 21:12 (16.67% or 9º up to 175% or 60º), each shingle must be fastened to the roof deck using a minimum of six fasteners.

For roof slopes over 21:12 (175% or 60º), six fasteners must be used.

Fasteners must be located 6-$^{1}/_{8}$ inches (157 mm) above the butt edge of the shingles.

Maximum exposure to the weather must be 5-$^{5}/_{8} \pm {}^{1}/_{8}$ inch (143 ± 3 mm).

In colder climates or wind regions where it is questionable whether the thermal-sealing adhesive will activate to seal the shingles, the shingles can be hand-sealed. Four, 1-inch diameter (25.4 mm) spots of cement should be placed under the exposed portion of the shingle, spaced 1 – 2 inches (25 – 51 mm) from each end of the shingle and two spots must be evenly spaced in between.

6.4 Valley Construction and Other Flashing:

Valleys must consist of woven, open valley or closed-cut construction and must be flashed in accordance with Section 1507.2.9.2 of the 2012, 2009 and 2006 IBC or Section R905.2.8.2 of the 2012, 2009 and 2006 IRC. Other flashings must be in accordance with Sections 1503.2 and 1507.2.9 of the 2012, 2009 and 2006 IBC, or Sections R903.2 and 905.2.8 of the 2012, 2009 and 2006 IRC, as applicable.

6.5 Hip and Ridge Application:

Hip and ridge shingles must be placed evenly over hips and ridges, and must be fastened to the roof deck using minimum two fasteners, one located on either side of the shingle, 1 inch (25.4 mm) up from the edge. Berkshire® Hip & Ridge Shingles, DuraRidge® Hip and Ridge Shingles and High Ridge Hip & Ridge with Sealant prefabricated hip and ridge shingles must be installed with a maximum exposure of 8 inches (203 mm). WeatherGuard® HP, ProEdge®, ProEdge Storm®, and RIZERidge® prefabricated hip ridge shingles must be installed with a maximum exposure of 6 inches (127 mm). Nailing for Hip and Ridge shingles are shown in application instructions.

6.6 Reroofing:

The existing asphalt shingle roof covering must be inspected in accordance with the provisions and limitations of Section 1510 of the 2012, 2009 and 2006 IBC or Section R907 of the 2012, 2009 and 2006 IRC, as applicable. Prior to the reroofing, hip and ridge coverings must be removed.

Except as noted in this section, the shingles must be installed in accordance with Section 6.3 and 6.5 of this Report. Fasteners must be of sufficient length to penetrate ¾ inch (19.1 mm) into the sheathing, or through the sheathing where the sheathing is less than ¾ inch (19.1 mm) thick. Flashing and edging must comply with Section 6.4 and with Sections 1510.5 and 1510.6 of the 2012, 2009 and 2006 IBC and Sections R907.5 and R907.6 of the 2012, 2009 and 2006 IRC, as applicable.

7. INSTALLATION MATERIALS

7.1 Sheathing:

The roof deck must be code-complying, minimum 3/8-inch thick (9.5 mm), exterior plywood complying with DOC PS-1; rated sheathing complying with DOC PS-2; or solid sheathing using minimum nominally 1 by 6 lumber.

7.2 Underlayment:

Under the IBC or IRC, underlayment must comply with ASTM D226, Type I, ASTM D4869, Type I or ASTM D6757 as specified in Section 1507.2.3 of the 2012, 2009 and 2006 IBC or IRC Section R905.2.3 of the 2012, 2009 and 2006 IRC

7.3 Self-adhering Polymer Modified Bitumen Sheet:

When used as an underlayment under shingles described herein, self-adhering polymer modified bitumen sheet must comply with ASTM D1970.

7.4 Starter Shingles:

The starter course shingle may consist of Woodstart ® Starter Shingle, Starter Strip Plus, Starter Strip Shingle, or Tri Built Starter Strip. If self-sealing three-tab shingles are used, remove the exposed tab portion and install with factory-applied sealant adjacent to the eaves.

7.5 Fasteners:

Fasteners must be minimum No. 12 gage [0.105 inch (2.7 mm)], 3/8-inch diameter head (9.5 mm), galvanized, stainless steel, aluminum or copper corrosion-resistance nails. Fasteners must be of sufficient length to penetrate into the sheathing min. ¾-inch (19.1 mm), or through the sheathing, where the sheathing is less than ¾-inch (19.1 mm) thick. Fasteners must comply with ASTM F1667.

7.6 Asphalt Cement:

Asphalt cement must comply with ASTM D4586, Type I, Class I.

8. CONDITIONS OF USE

The OWENS CORNING Asphalt Shingles described in this Report comply with, or are suitable alternatives to, what is specified in those codes listed in Section 2 of this Report, subject to the following conditions:

8.1 Materials and methods of installation shall comply with this Report and the manufacturer's published installation instructions. In the event of a conflict between the installation instructions and this Report, this Report governs.

8.2 The products are manufactured at the locations listed in Table 1 of this Report under the UL LLC Classification and Follow-Up Service Program, which includes audits in accordance with quality elements of ICC-ES Acceptance Criteria for Quality Documentation, AC10.

8.3 See UL Online Certifications Directory for Prepared Roof-Covering Materials (TFWZ and TGAH).

9. SUPPORTING EVIDENCE

9.1 Manufacturer's descriptive product literature, including installation instructions.

9.2 UL test reports and Classification in accordance with ANSI/UL 790, Class A and UL Subject 2375. See UL Product Certification Category for Prepared Roof-Covering Materials (TFWZ).

9.3 UL test reports and Classification in accordance with ASTM D3462. See UL Product Certification Category for Prepared Roof-Covering Materials (TFWZ).

9.4 UL Test reports and Classification in accordance with ICC-ES Acceptance Criteria for Alternative Asphalt Roofing Shingles, AC438

9.5 UL test reports and Classification in accordance with UL 2390/ASTM D7158, Class H. See UL Product Certification Category for Prepared Roof-Covering Materials (TGAH).

9.6 UL test reports and Classification in accordance with ASTM D3161, Class F. See UL Product Certification Category for Prepared Roof-Covering Materials (TFWZ).

9.7 Quality Documentation in accordance with ICC-ES Acceptance Criteria for Quality Documentation, AC10.

See UL's On-Line Certification Directory for the following product categories referenced above:

- TFWZ
- TGAH

10. IDENTIFICATION

OWENS CORNING asphalt shingles described in this Evaluation Report are identified by a marking bearing the report holder's name (OWENS CORNING), the plant identification, the product name, the UL Classification Mark and the evaluation report number ULER2453-01. The validity of this Evaluation Report is contingent upon this identification appearing on the product. . The UL Classification Mark shall indicate:

a. UL790/ASTM E108 - Class A

b. ASTM D3161 – Class F or Class A

c. UL2390 (ASTM D7158) – Class H

d. ASTM D3462

e. ICC-ES Acceptance Criteria, AC438

11. USE OF UL EVALUATION REPORT

11.1 The approval of building products, materials or systems is under the responsibility of the applicable authorities having jurisdiction.

11.2 UL Evaluation Reports shall not be used in any manner that implies an endorsement of the product, material or system by UL.

11.3 The current status of this report, as well as a complete directory of UL Evaluation Reports may be found at UL.com via our On-Line Certifications Directory: www.ul.com/erdirectory

Table 1 – Manufacturing Locations

LISTEE	LOCATION	FACTORY ID
OWENS CORNING	5201 FOX ST DENVER CO 80216	DENVER
OWENS CORNING	704 CORRINE AVE N STATION MEMPHIS TN 38107	MEMPHIS
OWENS CORNING	1249 NEWARK TPKE KEARNY NJ 07032	KEARNY
OWENS CORNING	1901 49TH AVE N MINNEAPOLIS MN 55430	MINNEAPOLIS
OWENS CORNING	128 W 8TH ST BROOKVILLE IN 47012	BROOKVILLE
OWENS CORNING	1501 N TAMARIND ST PO BOX 5665 COMPTON CA 90224	COMPTON
OWENS CORNING	8360 MARKET ST RD HOUSTON TX 77029	HOUSTON
OWENS CORNING	201 N NURSERY RD IRVING TX 75061	IRVING
OWENS CORNING	3750 NW YEON AVE PORTLAND OR 97208	PORTLAND
OWENS CORNING	5824 S ARCHER RD SUMMIT IL 60501	SUMMIT
OWENS CORNING	4795 FREDERICK DR ATLANTA GA 30336	ATLANTA
OWENS CORNING	1035 TALLEYRAND AVE JACKSONVILLE FL 32206	JACKSONVILLE
OWENS CORNING	890 W SMITH RD MEDINA OH 44256	MEDINA
OWENS CORNING	1 FOUNDATION DR SAVANNAH GA 31408	SAVANNAH

© 2014 UL LLC

This UL Evaluation Report is not an endorsement or recommendation for use of the subject and/or product described herein. This report is not the UL Listing or UL Classification Report that covers the subject product. The subject product's UL Listing or UL Classification is covered under a separate UL Report. UL disclaims all representations and warranties whether express or implied, with respect to this report and the subject or product described herein. Contents of this report may be based on data that has been generated by laboratories other than UL that are accredited as complying with ISO/IEC Standard17025 by the International Accreditation Service (IAS) or by any other accreditation body that is a signatory to the International Laboratory Accreditation Cooperation (ILAC) Mutual Recognition Arrangement (MRA). The scope of the laboratory's accreditation shall include the specific type of testing covered in the test report. As the accuracy of any non-UL data is the responsibility of the accredited laboratory, UL does not accept responsibility for the accuracy of this data.

EcoTouch® PINK® FIBERGLAS™ Insulation with PureFiber® Technology

Product Data Sheet

PROPINK® EcoTouch® Insulation Product Data

	Width		Length		Thickness	R-Value[1]
Metal Frame Construction	16" (406mm)	24" (609mm)	48" (1,219mm)	96" (2,438mm)	3½" (89mm)	11
	16" (406mm)	24" (609mm)	48" (1,219mm)	96" (2,438mm)	3½" (89mm)	13
	16" (406mm)	24" (609mm)		96" (2,438mm)	3½" (89mm)	15
	16" (406mm)	24" (609mm)		96" (2,438mm)	5½" (139mm)	21
Wood Frame Construction Walls	15" (381mm)	23" (584mm)	48" (1,219mm)	93" (2,362mm)	3½" (89mm)	11
	15" (381mm)	23" (584mm)	48" (1,219mm)	93" (2,362mm)	3½" (89mm)	13
	15" (381mm)	23" (584mm)		93" (2,362mm)	3½" (89mm)	15
	15" (381mm)	19¼" 23" (584mm)	48" (1,219mm)	93" (2,362mm)	6¼" (159mm)	19
	15" (381mm)	23" (584mm)		93" (2,362mm)	5½" (139mm)	20
	15" (381mm)	23" (584mm)		93" (2,362mm)	5½" (139mm)	21
	15" (381mm)	23" (584mm)		105" (2,667mm)	5½" (139mm)	21
	23" (381mm)	23" (584mm)		93" (2,362mm)	5½" (139mm)	21
Floor/Ceiling	15" (381mm)	19¼" 23" (584mm)	48" (1,219mm)	93" (2,362mm)	6¼" (159mm)	19
	15" (381mm)	23" (584mm)	48" (1,219mm)		6¾" (171mm)	22
	15" (381mm)	23" (584mm)	48" (1,219mm)		8" (203mm)	25
	15½" (394mm)	23¾" (603mm)	48" (1,219mm)		8¼" (209mm)	30
	16" (406mm)	19¼" 24" (609mm)	48" (1,219mm)		9½" (241mm)	30
	15½" (394mm)	23¾" (603mm)	48" (1,219mm)		10¼" (260mm)	38
	16" (406mm)	24" (609mm)	48" (1,219mm)		12" (305mm)	38
	16" (406mm)	24" (609mm)	48" (1,219mm)		14" (356mm)	49

EcoTouch® PureFiber® Technology

Description

Owens Corning™ EcoTouch® Insulation with PureFiber® Technology is flexible insulation made in R-values from 11 to 49. EcoTouch® Insulation is available plain, or faced with either a kraft or foil vapor retarder. The product is manufactured in thicknesses from 3½" to 14".

Uses

EcoTouch® Insulation can be used in a wide range of exterior wall and roof/ceiling applications. The product can be installed in wood or metal framing cavities, or can be installed between furring strips.

Features and Benefits

Excellent Thermal Control

With the range of R-values and thicknesses available, EcoTouch® Insulation can meet most thermal specifications with ease. The R30C and R38C provide excellent thermal performance in the limited space of cathedral ceilings.

Effective Acoustical Control

EcoTouch® Insulation enhances interior noise control by improving the Sound Transmission Class (STC) of walls and floor/ceiling assemblies.

Long Term Performance

EcoTouch® Insulation is dimensionally stable and will not slump within the wall cavity. Due to its inorganic fibers, EcoTouch® Insulation will not rot or mildew[1] and is noncorrosive to steel, copper, and aluminum.

Easy Installation

EcoTouch® Insulation is easy to handle and install. Sized for installation in either wood or metal stud construction, EcoTouch® Insulation can either be friction-fit or stapled into place. Trimming and fabrication can be done with an ordinary utility knife and is easily installed into odd-shaped cavities and small spaces.

With less dust than other fiberglass insulation products, EcoTouch® Insulation has excellent stiffness and recovery characteristics.[2]

Designed with the Environment in Mind

EcoTouch® Insulation includes a minimum of 50% total recycled content—the highest certified recycled content available in the fiberglass industry.[3] EcoTouch® Insulation is GREENGUARD Gold Certified and is verified to be formaldehyde free.[4]

SpaceSaver Packaging

EcoTouch® Insulation is compression packaged in exclusive SpaceSaver packaging from Owens Corning Insulating Systems. SpaceSaver packaging reduces freight and speeds job site handling/installation.

Design Considerations

Kraft and standard foil facings on this insulation will burn and must not be left exposed. Install facings in substantial contact with the finish material. Protect from open flame or other heat source.

(7) Sales of alcoholic beverages for on- or off-premises consumption may not be an accessory use within the respective "NA" or "R" classifications.

(8) Where accessory uses are permitted, the standards of the applicable base zoning district, as well as any overlay district on the property, shall apply including but not limited to setbacks, building heights, landscaping and other requirements outlined in this chapter except where otherwise provided in section 35-370.

(9) Temporary uses may be permitted pursuant to section 35-391.

(b) **Accessory Structures.**

(1) Accessory structures exceeding thirty (30) inches in height shall be located a minimum distance of five (5) feet from any side or rear property line. In residential districts, however, if an accessory structure has no sills, belt courses, cornices, buttresses, eaves, or similar projecting architectural features, then the minimum distance from any side or rear property line may be reduced to three (3) feet.

(2) Accessory structures on reverse corner lots shall maintain a minimum distance from the side street lot line equal to the depth of the front setback required on the lot to the rear.

(3) The maximum lot coverage of all accessory structures shall not exceed fifty (50) percent of the total area of the side and rear yards, provided that in residential districts the total floor area does not exceed a maximum of two thousand five hundred (2,500) square feet.

(4) Within nonresidential districts, accessory structures, except for carports, are prohibited within the side and rear setback areas of lots adjacent to residential district. The total floor area of all accessory structures shall not exceed two thousand five hundred (2,500) square feet.

(5) Accessory structures intended for use as accessory dwelling units shall also conform to the provisions of section 35-371.

(6) Accessory structures shall only be permitted within the side or rear yard area within all single-family and mixed residential districts, as identified in section 35-303, with the exception of carports and garages permitted pursuant to section 35-516(g). Subsection (6) shall not apply to residentially zoned property when the primary use is a church, school or other permitted nonresidential use.

(Ord. No. 2010-11-18-0985, § 2, 11-18-10) (Ord. No. 2012-10-18-0829, § 2, 10-18-12)

Sec. 35-370. -Accessory Use and Structure Regulations.

(a) **Accessory Uses.**

(1) An accessory use shall not be larger than twenty-five (25) percent of the gross floor area of the principal use.

(2) Notwithstanding specific limitations in Table 311-2, an accessory use shall only be allowed in a zoning district where it is permitted as a principal/primary use, and in a district of lesser intensity (as further depicted in Table 311-2), pursuant to the following table:

(A) Use authorized as a principal use by right in:	(B) May be permitted as an accessory use in:
L or I-1	I-2
L, C-3, O-2, C-2, C-1, O-1, O-1.5, or NC	I-1
C-3, O-2, C-2, C-1, O-1, O-1.5, or NC	L
C-3, O-2, C-2, C-1, O-1, O-1.5, or NC	D
O-2, C-2, C-1, O-1, O-1.5, or NC	C-3
C-2, C-1, O-1, O-1.5, or NC	O-2
C-1, O-1, O-1.5, or NC	C-2
O-1, O-1.5, or NC	C-1
O-1 or O-1.5	NC

(3) Uses that are only allowed by approval of a specific use authorization ("S") and not permitted by right ("P") in any zoning district shall not be allowed as an accessory use.

(4) Uses that are only allowed by-right in the "I-2" heavy industrial district or "MI-2" mixed heavy industrial district shall not be allowed as accessory uses in a less intense zoning district, unless they occupy no more than ten (10) percent of the gross floor area of the principal use and are fully enclosed within the principal structure.

(5) Residentially zoned property shall not have accessory uses [save home occupations (see section 35-378); ADDUs (see section 35-371); or typical residential accessory structures, e.g. garages (attached or detached); carports; fences; storage sheds; swimming pools; greenhouses/gazebos; sport courts; etc.].

(6) A use specifically prohibited by an overlay district, such as the "RIO" or "ERZD" shall not be permitted as an accessory use when located within such an overlay district.

EcoTouch® PINK® FIBERGLAS™ Insulation with PureFiber® Technology

Product Data Sheet

Buildings utilizing curtainwall construction may be required to be equipped with a sprinkler system to provide adequate fire protection. Check local building codes for specific requirements.

Commercial roof/ceiling thermal applications require that the building envelope block the movement of air from the outdoor environment to the conditioned space. Neither the insulation nor its facing should be relied upon to provide an air barrier. Failure to provide an adequate air barrier could lead to loss of thermal control, discomfort of the building occupants and frozen pipes.

When insulation is added to the inside perimeter of a structure, the area outside the insulation becomes exposed to greater temperature extremes. Check for piping which should be protected against freezing.

The need for and placement of a vapor retarder in commercial construction depends on many factors. The architect or specifier should evaluate the requirements of each project. If a vapor retarder is specified, maintaining the facing integrity may be important for effective moisture/humidity control. Repair any punctures or tears in the facing by taping. Follow the tape manufacturer's application recommendations.

Insulation installed too close to light fixtures may affect the luminaire's performance. Do not install insulation on top of or within 3" of recessed light fixtures unless the fixtures are approved for such use. This is a requirement of the National Electrical Code.

Due to the potential for skin irritation, EcoTouch® Unfaced Insulation should not be used for exposed applications where it will be subject to human contact.

Technical Data

Property (Unit)	Value	Test
Dimensional Stability (shrinkage)	<0.1%	ASTM C167
Surface Burning Characteristics (flame spread / smoke developed)		ASTM E84
Unfaced	25 / 50	
Kraft faced	NR / NR	
Foil faced	75 / 150	
Poly / FSK / PSK faced"	25 / 50	
Critical Radiant Flux (W/cm^2)		ASTM E970
all facings	>0.12	
Water Vapor Permeance (perms)		ASTM E96
Kraft faced	1.0	
Foil faced	0.5	
Poly faced	0.7	
FSK & PSK faced	0.02	
Water Vapor Sorption (by weight)	<5%	ASTM C1104
Odor Emission	Pass	ASTM C1304
Corrosion Resistance	Pass	ASTM C665, part 13.8
Fungi resistance	Pass	ASTM C1338

Classifications

EcoTouch® Product	ICC Building Construction	ASTM C665
Unfaced	all types	Type I
Kraft faced	Type III, IV, V	Type II, Class C, Cat. 1
Foil faced	Type III, IV, V	Type III, Class C, Cat. 1

Applicable Standards

EcoTouch® Unfaced Insulation is manufactured in compliance with ASTM Standard Specification C665 and is classified noncombustible per ASTM E136. EcoTouch® Kraft-faced Insulation is manufactured in compliance with ASTM C665, Type II, Class C. EcoTouch® Foil-faced Insulation is manufactured in compliance with ASTM C665, Type III, Class B and C. Federal Specification HH-I-521F has been canceled and is replaced by ASTM C665.

The thermal resistance values for EcoTouch® Insulation were tested in accordance with ASTM C518; R-value for insulation only.

The surface burning characteristics of EcoTouch® Insulation were derived from products tested in accordance with ASTM E84. This standard is used solely to measure and describe properties of products in response to heat and flame under controlled laboratory conditions, and should not be used to describe or approve the fire hazard of materials under actual fire conditions. However, the results of these tests may be used as elements of a fire risk assessment that takes into account all of the factors pertinent to an assessment of the fire hazard of a particular end use. Values are reported to the nearest five rating.

EcoTouch® PINK® FIBERGLAS™ Insulation with PureFiber® Technology

Product Data Sheet

Figure 1

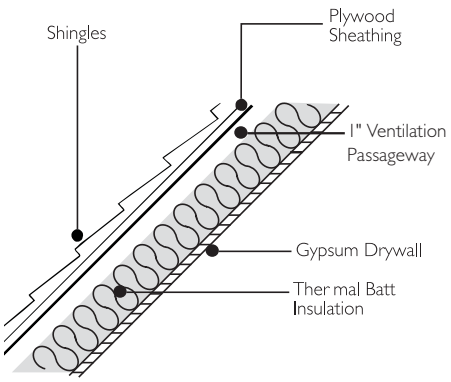

Figure 2

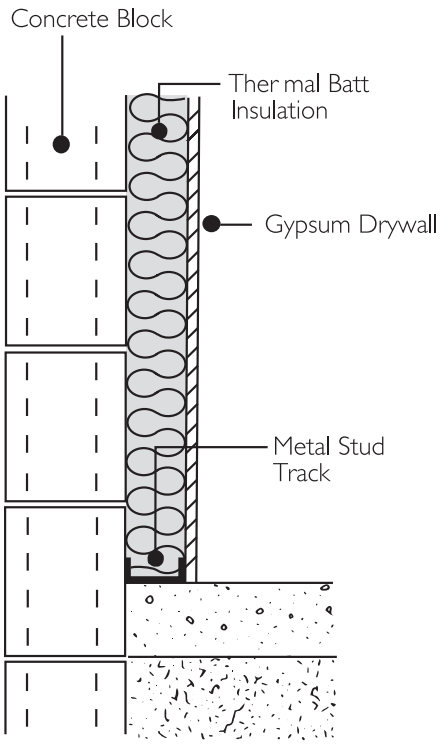

The vapor retarder permeance of the kraft and foil facings on EcoTouch® Insulation were developed from tests conducted in accordance with ASTM E96, desiccant method.

Installation

Between Wood Studs/Rafters

EcoTouch® Insulation fits between studs. If required, the flanges can be stapled to either the face or the side of the stud every 8–12" to prevent gaping or "fishmouthing" of the vapor retarder.

EcoTouch® Unfaced insulation can be friction-fit between studs after the cover material has been installed on one side of the cavity. Use wire or metal straps to hold insulation in place in applications without a cover material, or where the insulation does not fill the depth of the cavity.

Cathedral ceiling products (R30C and R38C) are intended to be friction-fit between rafters. Cathedral ceiling insulation should be installed to provide a minimum 1" ventilation passageway between the roof deck and insulation. (See Figure 1) It is recommended to use a vent baffle to assure proper clearance.

Between Metal Studs

EcoTouch® Insulation can be friction-fit in place until the interior finish is applied. Insulation should fill the cavity and the wall should eventually be closed on both sides. (See Figure 2)

In areas where it will be applied in heights over 8', use wire or metal straps to hold the product in place until the interior finish is applied. When faced insulation is used, the attachment flanges may be taped to the face of the metal stud prior to applying the interior finish. Wire or metal straps should also be used to hold the product in place in applications without a cover material or where the stud depth is larger than the insulation thickness.

Furring Strips

EcoTouch® Insulation can be applied between furring strips, hat channels, or Z-shaped furring in areas where a finish surface will be installed. Contact the furring strip manufacturer for appropriate fastening system.

Caution: FIBERGLAS™ insulation may cause temporary irritation to the skin, eyes and respiratory tract. Avoid contact with eyes and skin, wear loose-fitting, long-sleeved clothing, gloves and eye protection when handling and applying the material. Wash with soap and cold water after handling. Wash work clothes separately and wipe out washer.

EcoTouch® PINK® FIBERGLAS™ Insulation with PureFiber® Technology

Product Data Sheet

Notes

1. As manufactured, FIBERGLAS™ insulation is resistant to mold growth. However, mold growth can occur on building materials, including insulation, when it becomes contaminated with organic material and when water is present. To avoid mold growth on FIBERGLAS™ insulation, remove any water that has accumulated and correct or repair the source of the water as soon as possible. Insulation that has become wet should be inspected for evidence of residual moisture and contamination, and any insulation that is contaminated should be promptly removed and replaced.
2. According to 2010 clinical trial conducted in Toronto, Canada by Ducker Worldwide on behalf of Owens Corning Insulation Systems, LLC.
3. Certified by Scientific Certifications Systems to have a minimum of 50% recycled glass content, with at least 30% post-consumer recycled and the balance of pre-consumer recycled glass content.
4. Owens Corning™ EcoTouch® Unfaced FIBERGLAS™ insulation is verified to be formaldehyde free by the GREENGUARD Environmental Institute.

GREENGUARD
PRODUCT CERTIFIED FOR LOW CHEMICAL EMISSIONS
UL.COM/GG
UL 2818
GOLD

GREENGUARD Indoor Air Quality and GREENGUARD Gold Certified Products applies to EcoTouch® Unfaced Batts, EcoTouch® Faced Batts and Unbonded Loosefill Insulation. GREENGUARD Formaldehyde Free applies to EcoTouch® Unfaced Batts and Unbonded Loosefill Insulation.

GREENGUARD Gold Certified Products applies to Flame Spread 25 FSK Faced; Flame Spread 25 Extended Flanges PSK Faced; Sound Attenuation Batt Insulation; Sonobatts® Insulation Unfaced; Sonobatts® Insulation Kraft-Faced and Metal Building Insulation.

SCScertified™
MINIMUM 50% RECYCLED CONTENT
30% POST-CONSUMER
20% PRE-CONSUMER

SCS 50% recycled content applies to EcoTouch® Unfaced Batts and Rolls, EcoTouch® Faced Batts and Rolls, Loosefill Insulation, Metal Building Insulation products and Flexible Air Handling products.

ENERGY STAR PARTNER

UL Environment
EcoLogo℠ CCD-016

Applies to EcoTouch® Unfaced Insulation

Disclaimer of Liability

Technical information contained herein is furnished without charge or obligation and is given and accepted at recipient's sole risk. Because conditions of use may vary and are beyond our control, Owens Corning makes no representation about, and is not responsible or liable for the accuracy or reliability of data associated with particular uses of any product described herein. Nothing contained in this bulletin shall be considered a recommendation.

GREENGUARD Certified products are certified to GREENGUARD standards for low chemical emissions into indoor air during product usage. For more information, visit ul.com/gg.

OWENS CORNING INSULATING SYSTEMS, LLC
ONE OWENS CORNING PARKWAY
TOLEDO, OHIO, USA 43659
1-800-GET-PINK®
www.owenscorning.com

Pub. No. 10013811-D. Printed in U.S.A. October 2014. THE PINK PANTHER ™ & ©1964–2014 Metro-Goldwyn-Mayer Studios Inc. All Rights Reserved. The color PINK is a registered trademark of Owens Corning. © 2014 Owens Corning. All Rights Reserved.

205 Ostrom Drive
Construction Specification Sheet

- Home Style . . . 2
- Identify Rooms . . . 3
- Room Adjacencies . . . 4
- Interior Dimensions . . . 5
- Other Dimensions . . . 6
- Lot Excavation . . . 7
- Foundation . . . 8
- Framing . . . 9
- Roofing . . . 10
- Doors . . . 11
- Windows . . . 12
- Plumbing . . . 13
- Electrical Wiring . . . 14
- HVAC . . . 15
- Weatherization . . . 16
- Exterior Home . . . 17-18
- Wall . . . 19
- Ceiling and Trim . . . 20
- Kitchen . . . 21
- Bath . . . 22
- Cleaning Closet . . . 23
- Flooring . . . 24
- Lighting . . . 25
- Other Amenities . . . 26
- Garage / Pathways . . . 27
- Around the Deck . . . 28
- Water / Sport . . . 29
- Garden Design . . . 30
- Garden Elements . . . 31
- Interior Decorate . . . 32
- Exterior Decorate . . . 33
- Other Needs . . . 34

SEADC LLC

Spec Plan A: Home Style

Levels	Type
☐ One Story	Description:
☐ Two Story	Description:
☐ Three Story	Description:
☐ Split Level	Description:
☐ Basement	Description (cellar or day walk-in):
Style Type	Description:

Ceiling Heights	Type
First Floor	Size:
Second Floor	Size:
Third Floor	Size:
Attic	Size:
Basement	Size:
Other	Size:

Closets	Type		
Master Bedroom	☐ Walk-In	☐ Standard	Size:
Bedroom 1	☐ Walk-In	☐ Standard	Size:
Bedroom 2	☐ Walk-In	☐ Standard	Size:
Bedroom 3	☐ Walk-In	☐ Standard	Size:
Bedroom 4	☐ Walk-In	☐ Standard	Size:
Other	☐ Walk-In	☐ Standard	Size:
Other	☐ Walk-In	☐ Standard	Size:
Other	☐ Walk-In	☐ Standard	Size:

Spec Plan A: Identify Rooms

Main Level	Second Floor	Attic or 3rd Floor	Basement Level
Example: Kitchen	*Example: Master Bedroom*	*Example: Extra Room*	*Example: Darkroom*

Spec Plan A: Room Adjacencies

Main Level	Next Level

Primary Room Adjacencies

1: _____
2: _____
3: _____
4: _____
5: _____
6: _____

Secondary Room Adjacencies

1: _____
2: _____
3: _____
4: _____
5: _____
6: _____
7: _____
8: _____

Non-Adjacent Rooms

1: _____
2: _____
3: _____
4: _____
5: _____
6: _____

Primary Room Adjacencies

1: _____
2: _____
3: _____
4: _____
5: _____
6: _____

Secondary Room Adjacencies

1: _____
2: _____
3: _____
4: _____
5: _____
6: _____
7: _____
8: _____

Non-Adjacent Rooms

1: _____
2: _____
3: _____
4: _____
5: _____
6: _____

Spec Plan A: Interior Dimensions

Interior Finished Area	Size A	Size B	Size B	Calculated Square Footage
Example Room	*6 x 10*	*8 x 10*	*10 x 12*	*80 sq. feet*
Entry Way / Foyer	6 x 10	8 x 10	10 x 12	
Living Room	10 x 12	12 x 12	14 x 14	
Dining Room	12 x 12	12 x 14	14 x 16	
Kitchen	10 x 12	12 x 14	14 x 16	
Breakfast	8 x 10	10 x 10	10 x 12	
Solarium	8 x 10	10 x 10	10 x 12	
Family (Great) Room	15 x 15	18 x 18	21 x 21	
Den / Library	10 x 12	12 x 12	12 x 14	
Rec / Music Room	10 x 12	12 x 12	12 x 14	
Powder Room	5 x 5	6 x 7	7 x 8	
Mud (Laundry) Room	6 x 6	8 x 7	8 x 10	
Storage Room	5 x 6	7 x 8	9 x 10	
Master Bedroom	15 x 15	16 x 18	18 x 20	
Master Bath	9 x 9	10 x 12	12 x 14	
Master Closet	5 x 7	8 x 10	12 x 12	
Bedroom 2	10 x 12	12 x 12	14 x 14	
Bedroom 3	10 x 12	12 x 12	14 x 14	
Bedroom 4	10 x 12	12 x 12	14 x 14	
Bedroom 5	10 x 12	12 x 12	14 x 14	
Bonus Room	10 x 12	12 x 12	14 x 14	
Home Office	10 x 12	12 x 12	14 x 14	
Play / Exercise / Sewing	10 x 12	12 x 12	14 x 14	
Bath 2	5 x 8	5 x 10	6 x 12	
Bath 3	5 x 8	5 x 10	6 x 12	
Bath 4	5 x 8	5 x 10	6 x 12	
Other: (Hallway Width)				
Other:				
Other:				
Other:				
			Sum Calculated Square Footage	
		Add 20% to Subtotal		
			Total Square Footage Requirement	

Spec Plan A: Other Dimensions

Other Areas	Finished	Dimension	Add Factor	Calculated Square Footage
Example Room	☐	*8 x 10*	*16 sq. feet*	*96 sq. feet*
Attic	☐	x	x 20% if finished	
Basement	☐	x	x 20% if finished	
Garage	☐	x	x 20% if finished	
Carport	☐	x	x 20% if finished	
Work Area	☐	x	x 20% if finished	
Storage	☐	x	x 20% if finished	
Other	☐	x	x 20% if finished	
Other	☐	x	x 20% if finished	
Other	☐	x	x 20% if finished	
			Sum Calculated Square Footage	

Exterior	Dimension			Calculated Square Footage
Front Porch				
Walk Way				
Drive Way				
Deck				
Patio				
Screened Porch				
Other				
Other				
Other				
Other				
			Sum Calculated Square Footage	

Spec Plan B: Lot Excavation

Site Preparation: Define the Rules

Your Construction Specification Plan should include a complete layout of your property lot with surveyed dimensions and property boundary lines. Make a copy of the layout and define the rules of excavation. Your architect or builder can assist you with this project.

Layout Size
List any size requirements for your house. Define your type of garage — front entry, side-entry, rear-entry, detached, or drive-under access. View the physical features of your lot. Note any rocks, trees, water-front view, or other desirable or undesirable views that your designer must consider.

Setbacks
Allow for plenty of room for front, back and side. Outline where you want the driveway (about 10 feet wide or more) and turnaround space if side- or rear-entry garages (about 30 feet).

Easements
Check with your planning board for easement restrictions. Many communities require 5-10 feet easement along the side and rear of the property for utility lines, water drainage, and neighborhood boundaries. An easement may also be required for a walkway.

House Situated
Discuss with your architect or builder how you would like the home situated. Consider options on how to gain the most desirable view and privacy.

Extra Requirements
Note any extra space for parking, recreation vehicles, detached garage, or other outdoor buildings. Will there be a swimming pool, tennis court, or other recreational area?

Water Drainage
Understand how rain water flows through your lot. You want to channel the water away from the house.

Tag the Trees
Tag any trees that you want to remain standing. It may cost you more since excavators must work around them. But it is worth the extra price.

Identify Location of Utilities
Make sure you flag underground utility lines. You will be responsible for any damage.

Remove Trash
Check that all trash, debris, and tree stumps are removed and cleared from the property.

Spec Plan C: Foundation

Foundation Options

☐ **Slab Foundation**

- Least expensive.
- Property must graded relatively flat.
- Consists of poured concrete slap with depth to support interior walls.
- Generally suited for warmer climates.
- To get the foundation up off the ground in wet areas, you may consider a Raised Slab Foundation.
- Raised Slab Foundation consists of reinforced concrete block some 3 feet tall, interior back-filled with

☐ **Crawlspace Foundation**

- Generally preferred for most homes especially if the lot slopes.
- Allows for utility, and sewage lines under the home.
- Consists of reinforced concrete block some 3 feet tall around the perimeter of the home with structural piers located under load bearing points.

☐ **Basement Foundation**

- Most expense type foundation. Can be used as additional working or storage space.
- Find lots that slope up from front to back to avoid excessive fill or steps in the front of the home.
- Define type of basement: walk-out daylight basement or cellar type
- Will your basement be finished or unfinished.

☐ **Chimney**

- Describe type of chimney and number based on the number of open fireplaces in your home.
- Note that gas-only fireplaces do not require a chimney.

☐ **Termite Infestation**

- Test your foundation for termites. Eradicate any infestations prior to laying your foundation.

Spec Plan D: Framing

Type Framing

☐ **Wood Framing**

- Wood framing most commonly used in home construction.
- Plenty of skilled contractors with wood framing experience.
- Can be easily cut and fitted.
- Preferable for interior design when hanging fixtures and decorations.

☐ **Steel Framing**

- Steel framing growing in popularity, especially in tornado and hurricane prone areas.
- Stronger than wood. Can withstand some wind surges.
- Resistant to fire, mildew and molds, and wood-eating insects.
- Geometrically perfect for corners and window/door frames.
- Skilled contractors may be limited in your area.

☐ **Framing Considerations**

Once the framing starts, it can become very expensive for a structural change. It is very important that you plan your home up-front before framing:

See size dimensions page 3

- Plan for all doors.
- Plan for all windows.
- Plan for all closets and ample storage areas.
- Plan for all room dimensions.
- Plan for all fireplaces
- Plan for all outside venting systems
- Plan for all stairways and home entry.

- Inspect spacing for HVAC, plumbing, and utility lines.

Spec Plan E: Roofing

Select Roofing	Type
☐ Cedar Shingles	Description:
☐ Asphalt Shingles	Description:
☐ Metal Roofing	Description:
☐ Ceramic Tiles	Description:
☐ Other	Description:

Solar System	Type
☐ Yes	Description:
☐ Other Weather System	Description:

Rain Removal Systems	Type
☐ Gutter Systems	Description:
☐ Spouts / Guards	Description:

Other Roofing Needs	
☐	Description:
☐	Description:

Spec Plan F: Doors

	Floor / Location	Door Type	Descriptive Comments
Example Room	*1st Floor / Rear*	*French Doors*	*Elegant White, JKL Company, Model 44r*
Entry Way / Foyer			
Hall			
Living Room			
Dining Room			
Kitchen			
Breakfast			
Solarium			
Family (Great) Room			
Den / Library			
Rec / Music Room			
Powder Room			
Mud (Laundry) Room			
Storage Room			
Master Bed			
Master Bath			
Master Closet			
Bedroom 2			
Bedroom 3			
Bedroom 4			
Bedroom 5			
Bonus Room			
Connecting Hallways			
Home Office			
Play / Exercise / Sewing			
Bath 2			
Bath 3			
Bath 4			
Basement			
Attic			
Garage			

Spec Plan F: Windows

	Floor / Location	Window Type	Descriptive Comments
Example Room	*1st Floor / Rear*	*Bay Window*	*Filter Pane, ABC Company, Model XJK*
Entry Way / Foyer			
Hall			
Living Room			
Dining Room			
Kitchen			
Breakfast			
Solarium			
Family (Great) Room			
Den / Library			
Rec / Music Room			
Powder R			
Mud (Laur			
Storage R			
Master Be			
Master Ba			
Master Cl			
Bedroom 2			
Bedroom 3			
Bedroom 4			
Bedroom 5			
Bonus Ro			
Connecting			
Home Office			
Play / Exercise / Sewing			
Bath 2			
Bath 3			
Bath 4			
Basement			
Attic			
Garage			

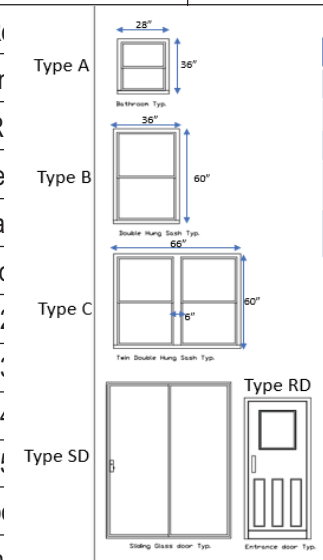

Type	Quantity	Comments
Type A (Bathroom)	3	28" Wide by 36" High Sash Type
Type B (Single Window)	15	36" Wide by 60" High Sash Type
Type C (Double Window)	11	66" Wide by 60" High with 6" Transom between
Type SD (Sliding Door double lite)	5	Standard Size (Aluminum as this is rear of house)
Type RD (Exterior door)	3	Standard 3'0"x6'8" with window pane 1 left hand and 2 right hand

Project: 205 Ostrom Drive, San Antonio, TX 78212

Historic Neighborhood Restrictions: wood or aluminum clad wood windows should be installed that feature meeting rails that are no taller
than 1.25" and stiles no wider than 2.25". White manufacturer's color is not allowed, and color selection must be presented to staff. There should be a minimum of two inches in depth between the front face of the window trim
and the front face of the top window sash. This must be accomplished by recessing the window sufficiently within the opening or with the installation of additional window trim to add thickness. Window trim must feature
traditional dimensions and an architecturally appropriate sill detail. Window track components must be painted to match the window trim or concealed by a wood window screen set within the opening.

Spec Plan G: Plumbing

	Floor / Location	Check, if Yes	Descriptive Comments
Example Room	*1st Floor / Rear*	☒	*utility sink in the southwest corner*
Entry Way / Foyer		☐	
Hall		☐	
Living Room		☐	
Dining Room		☐	
Kitchen		☐	
Breakfast		☐	
Solarium		☐	
Family (Great) Room		☐	
Den / Library		☐	
Rec / Music Room		☐	
Powder Room		☐	
Mud (Laundry) Room		☐	
Storage Room		☐	
Master Bed		☐	
Master Bath		☐	
Master Closet		☐	
Bedroom 2		☐	
Bedroom 3		☐	
Bedroom 4		☐	
Bedroom 5		☐	
Bonus Room		☐	
Connecting Hallways		☐	
Home Office		☐	
Play / Exercise / Sewing		☐	
Bath 2		☐	
Bath 3		☐	
Bath 4		☐	
Water Heater		☐	
		☐	
Basement		☐	
Attic		☐	
Garage		☐	

Spec Plan H: Electrical Wiring

	Floor / Location	Special Need	Descriptive Comments
Example Room	*1st Floor / Rear*	☒	*Home Entertainment, South Wall*
Entry Way / Foyer		☐	
Hall		☐	
Living Room		☐	
Dining Room		☐	
Kitchen		☐	
Breakfast		☐	
Solarium		☐	
Family (Great) Room		☐	
Den / Library		☐	
Rec / Music Room		☐	
Powder Room		☐	
Mud (Laundry) Room		☐	
Storage Room		☐	
Master Bed		☐	
Master Bath		☐	
Master Closet		☐	
Bedroom 2		☐	
Bedroom 3		☐	
Bedroom 4		☐	
Bedroom 5		☐	
Bonus Room		☐	
Connecting Hallways		☐	
Home Office		☐	
Play / Exercise / Sewing		☐	
Bath 2		☐	
Bath 3		☐	
Bath 4		☐	
		☐	
		☐	
Basement		☐	
Attic		☐	
Garage		☐	

Spec Plan I: HVAC

Heating Systems	Type
☐ Electrical	Description:
☐ Natural Gas	Description:
☐ Oil	Description:
☐ Geothermal	Description:
☐ Wood / Coal	Description:
Cooling Systems	**Type**
☐ Central Air System	Description:
☐ Central Pump	Description:
☐ Room Units	Description:
Alternative Systems	**Type**
☐ Solar	Description:
☐ Wind	Description:
☐ Other	Description:
Control Systems	**Type**
☐ Programmable	Description:
☐ Other	Description:
Air Quality Systems	**Type**
☐ Humidifier	Description:
☐ Dehumidifier	Description:
Distribution	**Type**
☐ Duct System	Description:
☐ Radiator	Description:
☐ Other	Description:

Spec Plan J: Weatherization

Insulation / Weatherization	Type
☐ Fiber Glass	Description:
☐ Spray Form	Description:
☐ Other	Description:
☐ Weather Stripping	Description:
☐ Other	Description:

Insulation Projects	Type
☐ Unfinished Attic	Description (R-Value):
☐ Finished Attic	Description (R-Value):
☐ Basement Walls	Description (R-Value):
☐ Cathedral Ceilings	Description (R-Value):
☐ Crawlspace Heated	Description (R-Value):
☐ Under Crawlspace	Description (R-Value):
☐ Exterior Walls	Description (R-Value):
☐ Floors	Description (R-Value):
☐ Foundation Walls	Description (R-Value):
☐ Under Slab	Description (R-Value):
☐ HVAC Ducts	Description (R-Value):
☐ Interior Noise Control	Description (R-Value):
☐ Water Heater	Description (R-Value):
☐ Other	Description (R-Value):
☐ Other	Description (R-Value):

Spec Plan K: Exterior Home

Front Facing	Type
☐ Vinyl / Aluminum	Description:
☐ Wood Shingles / Panel	Description:
☐ Brick Facing	Description:
☐ Stone / Masonry	Description:
☐ Shutters	Description:
☐ Decor	Description:
☐ Other	Description:

Side Facing	Type
☐ Vinyl / Aluminum	Description:
☐ Wood Shingles / Panel	Description:
☐ Brick Facing	Description:
☐ Stone / Masonry	Description:
☐ Shutters	Description:
☐ Decor	Description:
☐ Other	Description:

Rear Facing	Type
☐ Vinyl / Aluminum	Description:
☐ Wood Shingles / Panel	Description:
☐ Brick Facing	Description:
☐ Stone / Masonry	Description:
☐ Shutters	Description:
☐ Decor	Description:
☐ Other	Description:

Spec Plan K: Exterior Home (con't.)

Detached Garage	Type
☐ Vinyl / Aluminum	Description:
☐ Wood Shingles / Panel	Description:
☐ Brick Facing	Description:
☐ Stone / Masonry	Description:
☐ Shutters	Description:
☐ Decor	Description:
☐ Other	Description:

Shed / Out Building	Type
☐ Vinyl / Aluminum	Description:
☐ Wood Shingles / Panel	Description:
☐ Brick Facing	Description:
☐ Stone / Masonry	Description:
☐ Shutters	Description:
☐ Decor	Description:
☐ Other	Description:

Other Structure	Type
☐ Vinyl / Aluminum	Description:
☐ Wood Shingles / Panel	Description:
☐ Brick Facing	Description:
☐ Stone / Masonry	Description:
☐ Shutters	Description:
☐ Decor	Description:
☐ Other	Description:

Spec Plan L: Walls

	Floor / Location	Project Type	Descriptive Comments
Example Room	*1st Floor / Rear*	*Wall Paper Print*	*Outside Wall, ABC Company, Model XJK*
Entry Way / Foyer			
Hall			
Living Room			
Dining Room			
Kitchen			
Breakfast			
Solarium			
Family (Great) Room			
Den / Library			
Rec / Music Room			
Powder Room			
Mud (Laundry) Room			
Storage Room			
Master Bed			
Master Bath			
Master Closet			
Bedroom 2			
Bedroom 3			
Bedroom 4			
Bedroom 5			
Bonus Room			
Connecting Hallways			
Home Office			
Play / Exercise / Sewing			
Bath 2			
Bath 3			
Bath 4			
Basement			
Attic			
Garage			

Spec Plan L: Ceilings and Trim

	Floor / Location	Project Type	Descriptive Comments
Example Room	*1st Floor / Rear*	*Tray Ceiling*	*MNO Company*
Entry Way / Foyer			
Hall			
Living Room			
Dining Room			
Kitchen			
Breakfast			
Solarium			
Family (Great) Room			
Den / Library			
Rec / Music Room			
Powder Room			
Mud (Laundry) Room			
Storage Room			
Master Bed			
Master Bath			
Master Closet			
Bedroom 2			
Bedroom 3			
Bedroom 4			
Bedroom 5			
Bonus Room			
Connecting Hallways			
Home Office			
Play / Exercise / Sewing			
Bath 2			
Bath 3			
Bath 4			
Basement			
Attic			
Garage			

Spec Plan M: Kitchen

Kitchen Design	Type
☐ Cabinets	Description:
☐ Lazy Susan	Description:
☐ Drawers Size	Description:
☐ Counter Tops	Description:
☐ Seating Area	Description:
☐ Islands	Description:
☐ Sinks	Description:
☐ Faucets / Fittings	Description:
☐ Sink Appliances	Description:
☐ Pantry / Storage	Description:
☐ Open Shelving	Description:
☐ Wine Storage	Description:
☐ Other	Description:

Kitchen Appliances	Type
☐ Cooking Tops	Description:
☐ Cooking Ranges	Description:
☐ Microwave Ovens	Description:
☐ Exhaust Vents / Hoods	Description:
☐ Dishwasher	Description:
☐ Trash Compactors	Description:
☐ Recycle Bins	Description:
☐ Other	Description:
☐ Other	Description:

Spec Plan M: Bath

Master Bath	Type
☐ Bath Tub	Description:
☐ Shower	Description:
☐ Sinks	Description:
☐ Faucet / Fittings	Description:
☐ Cabinets	Description:
☐ Toilets	Description:
☐ Other Appliances	Description:
☐ Medicine Cabinets	Description:
☐ Laundry Facilities	Description:
☐ Storage Facilities	Description:
☐ Other	Description:

Other Bath _____	Type
☐ Bath Tub	Description:
☐ Shower	Description:
☐ Sinks	Description:
☐ Faucet / Fittings	Description:
☐ Cabinets	Description:
☐ Toilets	Description:
☐ Other Appliances	Description:
☐ Medicine Cabinets	Description:
☐ Laundry Facilities	Description:
☐ Storage Facilities	Description:
☐ Other	Description:

Spec Plan N: Cleaning Closet

Laundry Room	Type
☐ For Electric Appliance	Description:
☐ For Gas Appliance	Description:
☐ Utility Sink	Description:
☐ Laundry Shoot	Description:
☐ Folding Counter Top	Description:
☐ Shelving	Description:
☐ Cabinets	Description:
☐ Other	Description:
☐ Other	Description:

Cleaning Closet	Type
☐ Centralized Vacuum	Description:
☐ Shelving	Description:
☐ Cabinets	Description:
☐ Utility Sink	Description:
☐ Other	Description:
☐ Other	Description:
☐ Other	Description:

Mud Room	Type
☐ Yes	Description:
☐ Requirements	Description:
☐ Other	Description:

Spec Plan O: Flooring

	Floor / Location	Floor Finish	Descriptive Comments
Example Room	*1st Floor / Rear*	*Hardwood*	*Maple Finish from XYZ Company, Model 123*
Entry Way / Foyer			
Hall			
Living Room			
Dining Room			
Kitchen			
Breakfast			
Solarium			
Family (Great) Room			
Den / Library			
Rec / Music Room			
Powder Room			
Mud (Laundry) Room			
Storage Room			
Master Bed			
Master Bath			
Master Closet			
Bedroom 2			
Bedroom 3			
Bedroom 4			
Bedroom 5			
Bonus Room			
Connecting Hallways			
Home Office			
Play / Exercise / Sewing			
Bath 2			
Bath 3			
Bath 4			
Basement			
Attic			
Garage			

Spec Plan P: Lighting

	Floor / Location	Required Lighting	Descriptive Comments
Example Room	*1st Floor / Rear*	*Ceiling Fan*	*Benchwood, TUV Company*
Entry Way / Foyer			
Hall			
Living Room			
Dining Room			
Kitchen			
Breakfast			
Solarium			
Family (Great) Room			
Den / Library			
Rec / Music Room			
Powder Room			
Mud (Laundry) Room			
Storage Room			
Master Bed			
Master Bath			
Master Closet			
Bedroom 2			
Bedroom 3			
Bedroom 4			
Bedroom 5			
Bonus Room			
Connecting Hallways			
Home Office			
Play / Exercise / Sewing			
Bath 2			
Bath 3			
Bath 4			
Basement			
Attic			
Garage			

Spec Plan Q: Other Amenities

Example Room	*1st Floor / Rear*	*Fireplace, Book Shelf*	*Gas Fireplace, TUV Company, Model 66Z*
Entry Way / Foyer			
Hall			
Living Room			
Dining Room			
Kitchen			
Breakfast			
Solarium			
Family (Great) Room			
Den / Library			
Rec / Music Room			
Powder Room			
Mud (Laundry) Room			
Storage Room			
Master Bed			
Master Bath			
Master Closet			
Bedroom 2			
Bedroom 3			
Bedroom 4			
Bedroom 5			
Bonus Room			
Connecting Hallways			
Home Office			
Play / Exercise / Sewing			
Bath 2			
Bath 3			
Bath 4			
Basement			
Attic			
Garage			

Spec Plan R: Garage-Pathways

Garage	Type
☐ Flooring	Description:
☐ Electrical	Description:
☐ Lighting	Description:
☐ Walls	Description:
☐ Insulation	Description:
☐ Other	Description:
☐ Other	Description:
Drive Way	**Type**
☐ Interlocking Block	Description:
☐ Brick	Description:
☐ Asphalt Paving	Description:
☐ Concrete Paving	Description:
☐ Pebble Rock	Description:
☐ Other	Description:
☐ Other	Description:
Path Ways	**Type**
☐ Interlocking Block	Description:
☐ Brick	Description:
☐ Stone	Description:
☐ Concrete Paving	Description:
☐ Pebble Rock	Description:
☐ Other	Description:
☐ Other	Description:

Spec Plan S: Around the Deck

Deck	Type
☐ Deck Design	Description:
☐ Wood Decks	Description:
☐ Wood Composite	Description:
☐ Vinyl Decks	Description:
☐ Railings	Description:
☐ Other	Description:
☐ Other	Description:

Patios	Type
☐ Interlocking Block	Description:
☐ Brick	Description:
☐ Stone	Description:
☐ Concrete	Description:
☐ Pebble Rock	Description:
☐ Other	Description:
☐ Other	Description:

Entertainment	Type
☐ Grill Station	Description:
☐	
☐ Fire Pits	Description:
☐	
☐ Other	Description:
☐	

Spec Plan S: Water / Sport

Water Facilities	Type
☐ Spa	Description:
☐ Hot Tubs	Description:
☐ Swimming Pool	Description:
☐ Swimming Deck	Description:
☐ Swimming Fencing	Description:
☐ Other Swimming	Description:
☐ Water Pond	
☐ Fountains	Description:

Sport	Type
☐ Tennis Court	Description:
☐ Basketball Court	Description:
☐ Play Area	Description:
☐ Other	Description:

Spec Plan S: Garden Design

Exterior Front	Type
☐ Along the House	Description:
☐ Flower Beds	Description:
☐ Trees / Shrubs	Description:
☐ Lighting	Description:
☐ Other	Description:

Facing Right Side	Type
☐ Along the House	Description:
☐ Flower Beds	Description:
☐ Trees / Shrubs	Description:
☐ Lighting	Description:
☐ Other	Description:

Facing Left Side	Type
☐ Along the House	Description:
☐ Flower Beds	Description:
☐ Trees / Shrubs	Description:
☐ Lighting	Description:
☐ Other	Description:

Exterior Rear	Type
☐ Along the House	Description:
☐ Flower Beds	Description:
☐ Trees / Shrubs	Description:
☐ Lighting	Description:
☐ Other	Description:

Spec Plan S: Garden Elements

Elements	Type
☐ Irrigation System	Description:
☐ Other Watering System	Description:
☐ Decorative Fencing	Description:
☐ Privacy Fencing	Description:
☐ Animal Fencing	Description:
☐ Other Fencing	Description:
☐ Privacy Barriers	Description:
☐ Arbors / Awnings	Description:
☐ Gazebos	Description:
☐ Greenhouse	Description:
☐ Storage Sheds	Description:
☐ Flag Pole	Description:
☐ Mail Box	Description:
☐ Other Out Structure	Description:
☐ Other Out Structure	Description:
☐ Other	Description:
☐ Other	Description:
☐ Other	Description:
☐ Other	Description:
☐ Other	Description:

Spec Plan T: Interior Decorate

	Location	Decor Item	Descriptive Comments
Example Room	*1st Floor / Rear*	*Leather Couch*	*HJK Furniture, Model 44-KK*
Entry Way / Foyer			
Hall			
Living Room			
Dining Room			
Kitchen			
Breakfast			
Solarium			
Family (Great) Room			
Den / Library			
Rec / Music Room			
Powder Room			
Mud (Laundry) Room			
Storage Room			
Master Bed			
Master Bath			
Master Closet			
Bedroom 2			
Bedroom 3			
Bedroom 4			
Bedroom 5			
Bonus Room			
Connecting Hallways			
Home Office			
Play / Exercise / Sewing			
Bath 2			
Bath 3			
Bath 4			
Basement			
Attic			
Garage			

Spec Plan S: Exterior Decorate

	Location	Decor Item	Descriptive Comments
Example Area	*Along Back Fence*	*High Scrubs*	*Link to: www.something.com*
Deck Area			
Deck Area			
Deck Area			
Patio Area			
Patio Area			
Patio Area			
Front Yard			
Front Yard			
Front Yard			
Side Yard			
Side Yard			
Side Yard			
Side Yard			
Rear Yard			
Rear Yard			
Rear Yard			
Rear Yard			
Rear Yard			
Garden Bed / Area			
Garden Bed / Area			
Garden Bed / Area			
Garden Bed / Area			
Garden Bed / Area			
Garden Bed / Area			
Garden Bed / Area			
Garden Bed / Area			
Other			
Other			
Other			
Other			

HardiePlank®

Sleek and strong, HardiePlank® lap siding is not just our best-selling product – it's the most popular brand of siding in America.

With a full spectrum of colors and textures, homeowners can enjoy protection from the elements and the versatility to make their dream home a reality. From Victorians to Colonials, HardiePlank lap siding sets the standard in exterior cladding.

A classic look for **THE HOME OF THEIR DREAMS.**

SELECT CEDARMILL©*

Woodstock Brown

SMOOTH*

Countrylane Red

Thickness	5/16 in.					
Length	12 ft. planks					
Width	5.25 in.	6.25 in.	7.25 in.	8.25 in.	9.25 in.	12 in.
Exposure	4 in.	5 in.	6 in.	7 in.	8 in.	10.75 in.
ColorPlus Pcs./Pallet	324	280	252	210		
Prime Pcs./Pallet	360	308	252	230	190	152
Pcs./Sq.	25.0	20.0	16.7	14.3	12.5	9.3

CUSTOM BEADED CEDARMILL©

Light Mist

CUSTOM BEADED SMOOTH

Heathered Moss

Thickness	5/16 in.
Length	12 ft. planks
Width	8.25 in.
Exposure	7 in.
ColorPlus Pcs./Pallet	210
Prime Pcs./Pallet	240
Pcs./Sq.	14.3

CUSTOM COLONIAL ROUGHSAWN®

Mountain Sage

CUSTOM COLONIAL SMOOTH®

Timber Bark

Thickness	5/16 in.
Length	12 ft. planks
Width	8 in.
Exposure	6.75 in.
ColorPlus Pcs./Pallet	216
Prime Pcs./Pallet	240
Pcs./Sq.	14.9

*6.25 in. and 8.25 in. also available in coastal colors. 9.25 in. and 12 in. only available primed.

Products are available primed or with ColorPlus Technology finishes. For more details, visit **jameshardiepros.com**

TABLE OF CONTENTS

Product Information
- General Information....2
- Lite Cut Information....3
- Unit Sizing, Rough Openings & Masonry Openings....4
- Opening Formulas....5
- Operation & Sash Tilting....6

Options
- SDL & GBG....7
- Jamb Extender & Prep for Stool....8
- Trim....9
- Mullion....10

Sizing Details
- Min-Max Sizing....11

Section Details
- Operator:
  - Vertical....12
  - Horizontal....13
- In-Sash Picture/Transom:
  - Vertical....14
  - Horizontal....15

GENERAL INFORMATION

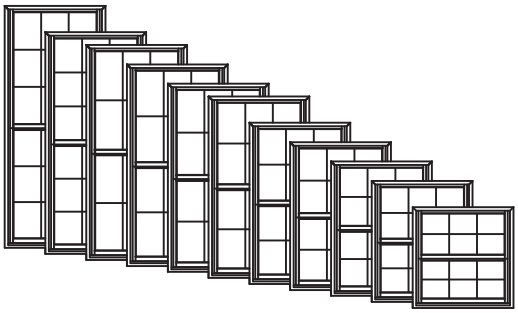

W-2500 Clad Double-Hung windows feature fully operating upper and lower sash. Counterbalancing is achieved with helical spring extension systems hidden in weatherable PVC jambliners. Operating units are supplied with cam-type sash locks installed. There are several hardware finish options. Refer to the Specifications for available finish options.

Multiple Assemblies

W-2500 Clad Double-Hung windows may be mulled beside other clad double-hung or clad picture windows, or below clad transom windows, to fulfill a wide variety of needs.

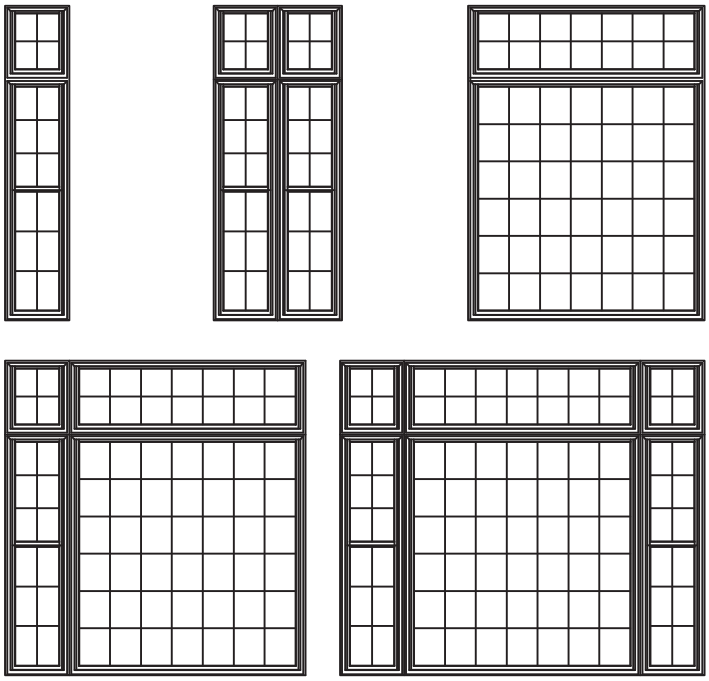

LITE CUT INFORMATION

W-2500 Clad Double-Hung windows are available with removable grilles in 7/8" Full Surround or Beaded SDL only, 5/8" flat or 23/32" contour Grilles Between the Glass (GBG) and Simulated Divided Lites (SDL). Standard lite cuts are rectangular.

Lite Cut Options

Special lite cut patterns can include a wide variety of straight line and radius patterns. The illustrations shown here represent just a few of the possibilities. Rectangular, horizontal, vertical and Prairie lite patterns are available in all standard size clad double-hung windows. Uneven, diamond, radius and Gothic lite cuts are available, subject to approval. Approvals are based on the ability to fulfill the design requirement while maintaining the construction integrity of the finished product.

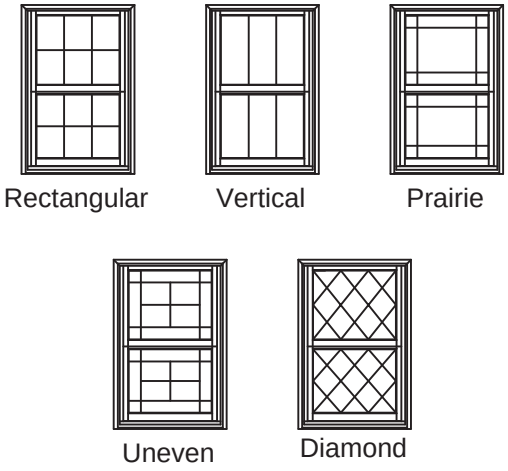

Bar Alignment

Alignment of divided lite muntin bars from one window to the next is often required by fine architectural design. Wood grilles, GBG's, and Simulated Divided Lites may be specified with muntin bars aligned.

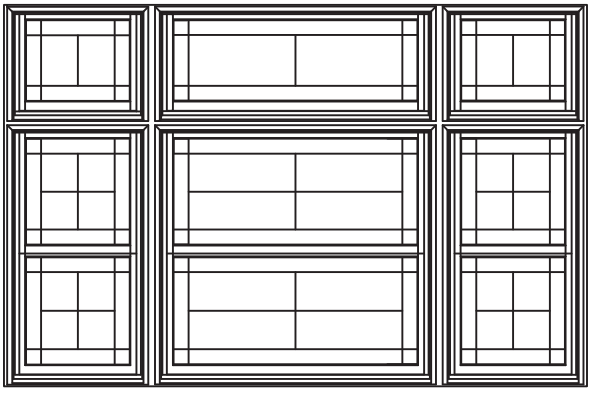

UNIT SIZING, ROUGH OPENINGS & MASONRY OPENINGS

General Notes:
Unit size is always the maximum size of the window with or without trim and does not include nail fin.

Masonry Opening:
Masonry opening is always 1/2" over (height and width) the unit size or the outside of the trim of the window.

Rough Opening:
Rough opening is always 3/4" over frame size of the window.

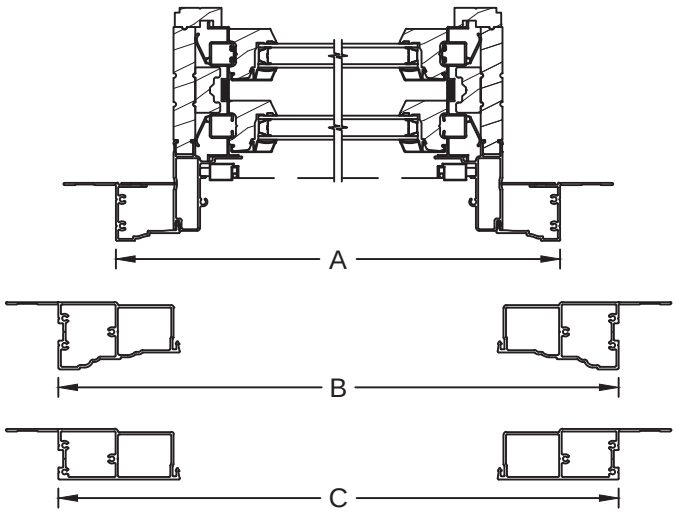

Horizontal exterior trim offerings below are the same with or without sill nose.

Horizontal Sections		
Trim Option	Dimension	Frame +
Brickmould	A	3"
Adams Casing	B	6"
3 1/2" Flat Casing	C	6"

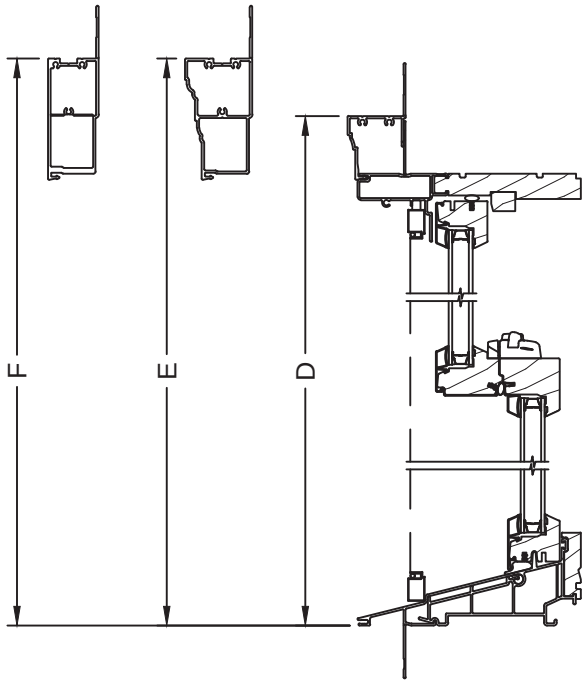

Vertical exterior trim offerings without sill nose. Trim on 3 sides.

Vertical Sections (w/o Sill Nose)		
Trim Option	Dimension	Frame +
Brickmould	D	3"
Adams Casing	E	6"
3 1/2" Flat Casing	F	6"

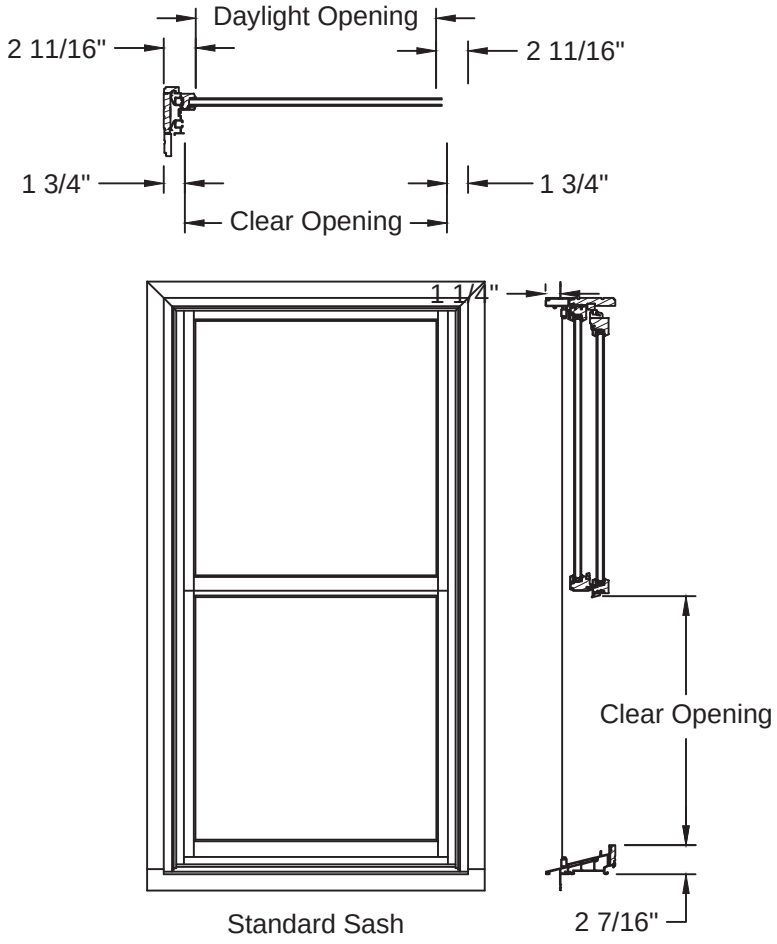

Standard Sash Options

Consult the Design Data Tables for clear opening information. For dimensional units, contact Jeld-Wen - Bend Window Division, Technical Services Department for clear opening information.

OPERATION & SASH TILTING

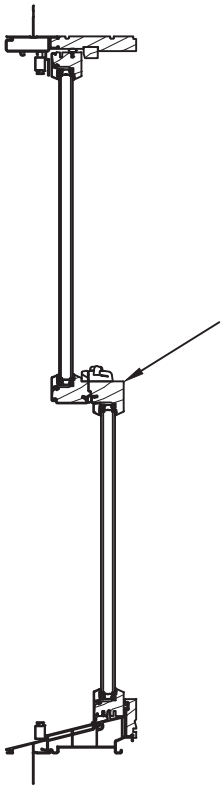

Double-Hung Operation:

When the sash are locked at the check rails the sash are closed and sealed in the sash opening of the frame.

When the sash are unlocked the lower sash travels vertically to any position desired. The upper sash can also be positioned as desired.

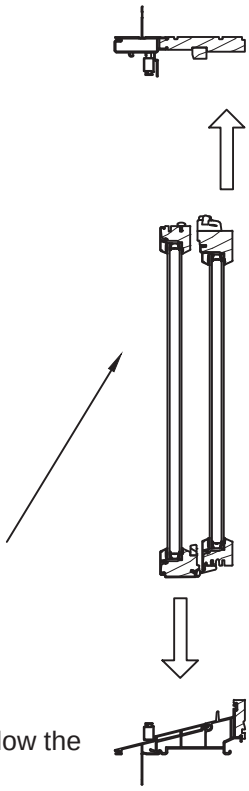

Sash Tilting for Washing:

The W-2500 Clad Double-Hung window will allow the sash to be tilted or removed for easy cleaning.

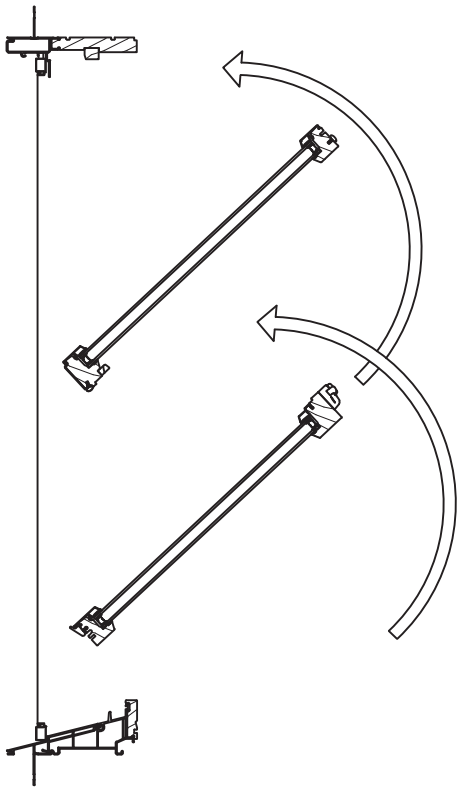

SDL & GBG OPTIONS

Exterior ◄—— ——► Interior

SDL Options

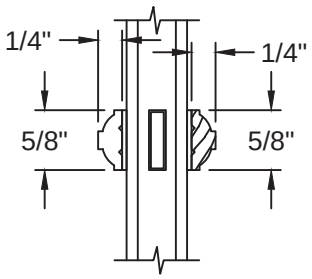

5/8" Bead SDL

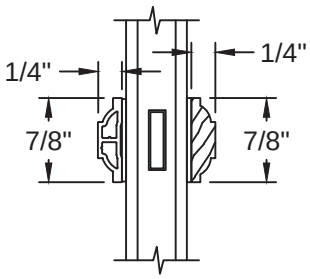

7/8" Bead SDL

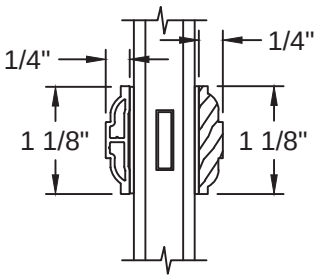

1 1/8" Bead SDL

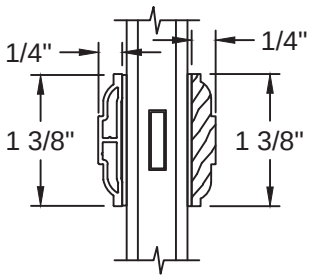

1 3/8" Bead SDL

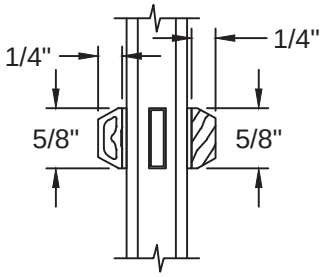

5/8" Putty SDL

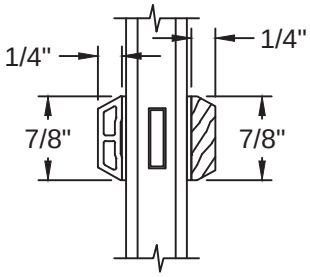

7/8" Putty SDL

GBG Options

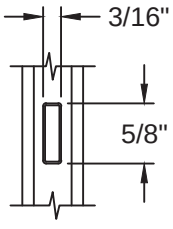

5/8" Grille

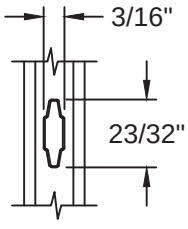

23/32" Grille

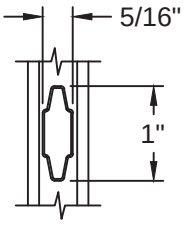

1" Grille

Note: Various Combinations of the SDL Bars Shown are Available

JAMB EXTENDER & PREP FOR STOOL OPTIONS

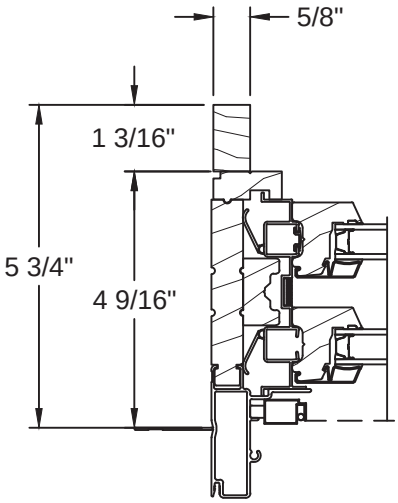

5 3/4" Wall
4/4 (21/32") Jamb Thickness
(Option)

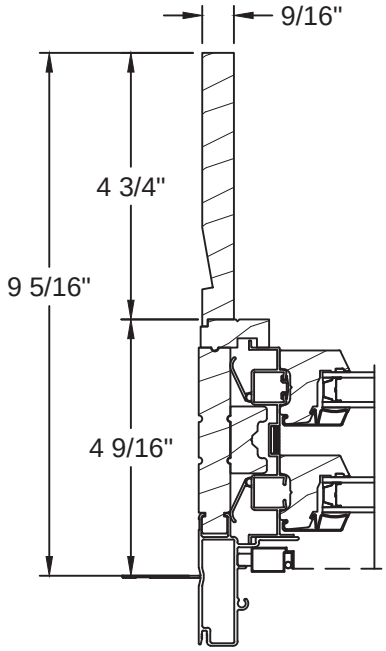

9 5/16" Wall
Max 1-PC
Jamb Extender

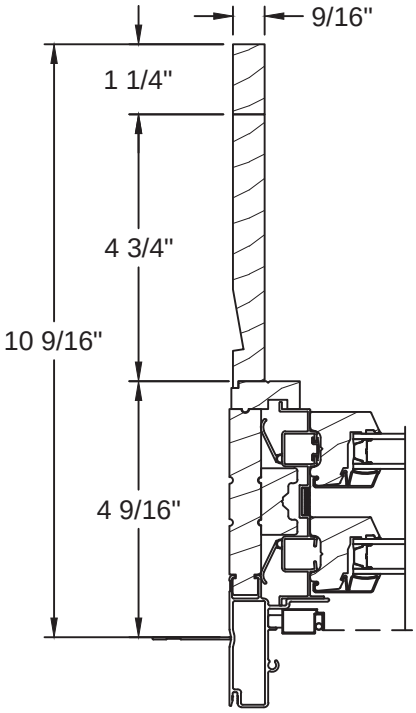

10 9/16" Wall
Max Wall Depth

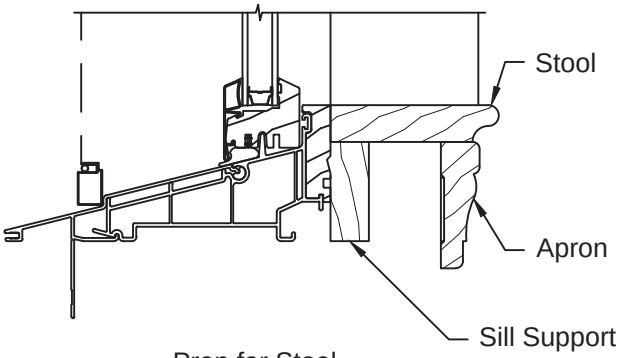

Prep for Stool

Note: Stool, apron, and sill support are applied by trim carpenter after window is installed and are not provided by JELD-WEN.
Unit is shipped without sill jamb extenders.

TRIM OPTIONS

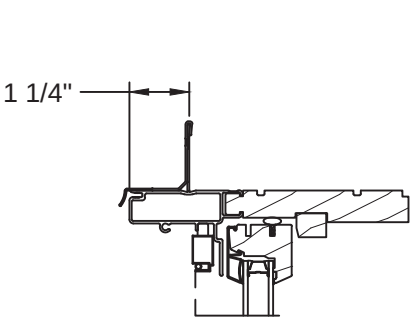

Standard

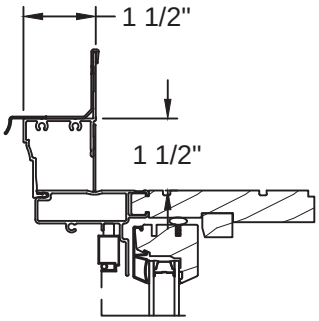

Brickmould

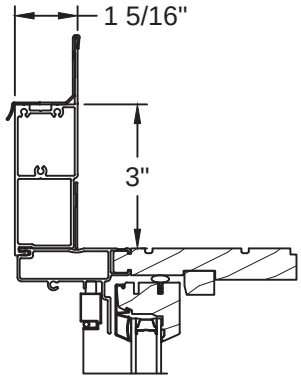

3 1/2"
Flat Casing

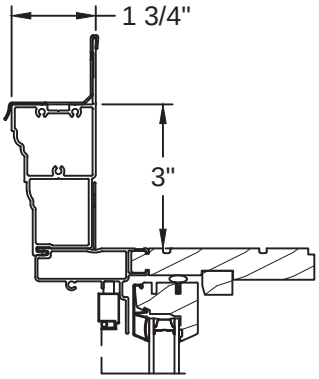

Adams
Casing

Sill Nose Options

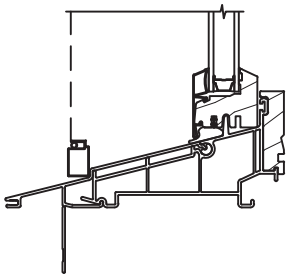

Sill with Nail Fin

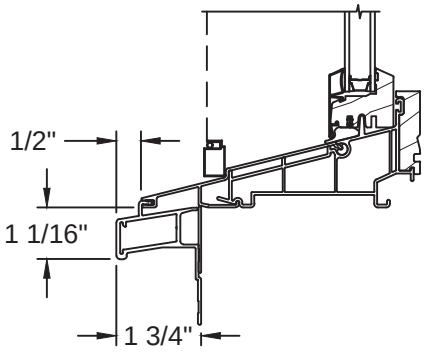

Sill with Standard Casing

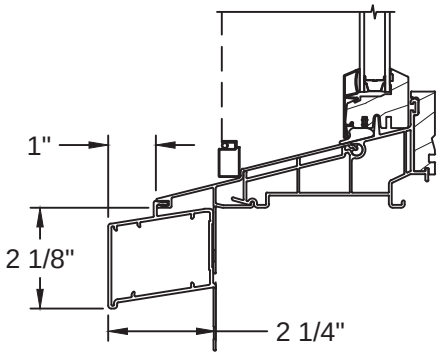

Sill with 2" Sill Nose Casing

Product specifications may change without notice.
Questions? Consult JELD-WEN customer service.

MULLION OPTIONS

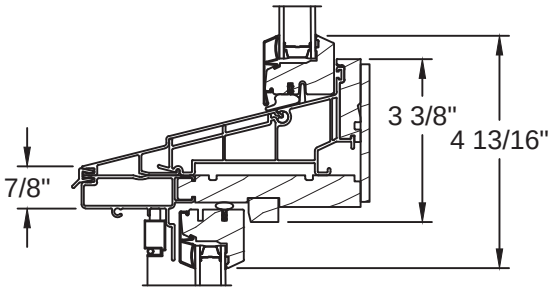

Operating Double-Hung with In-Sash Picture/Transom

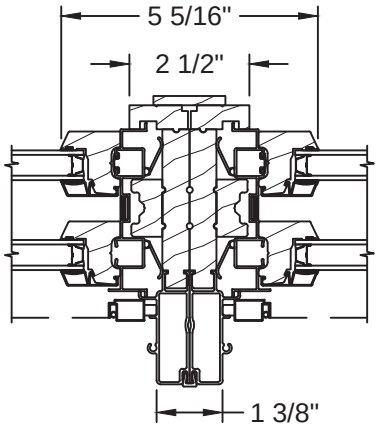

Twin Operating Double-Hung

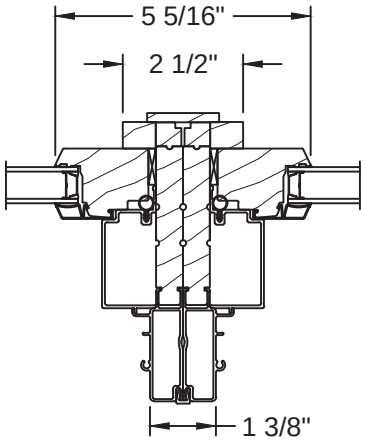

In-Sash Picture/Transom Beside In-Sash Picture/Transom

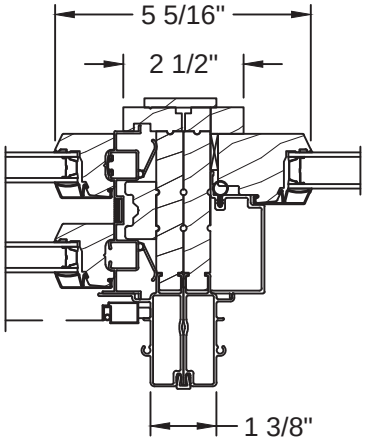

Operating Double-Hung Beside In-Sash Picture/Transom

Product specifications may change without notice.
Questions? Consult JELD-WEN customer service.

OPERATOR - VERTICAL SECTION

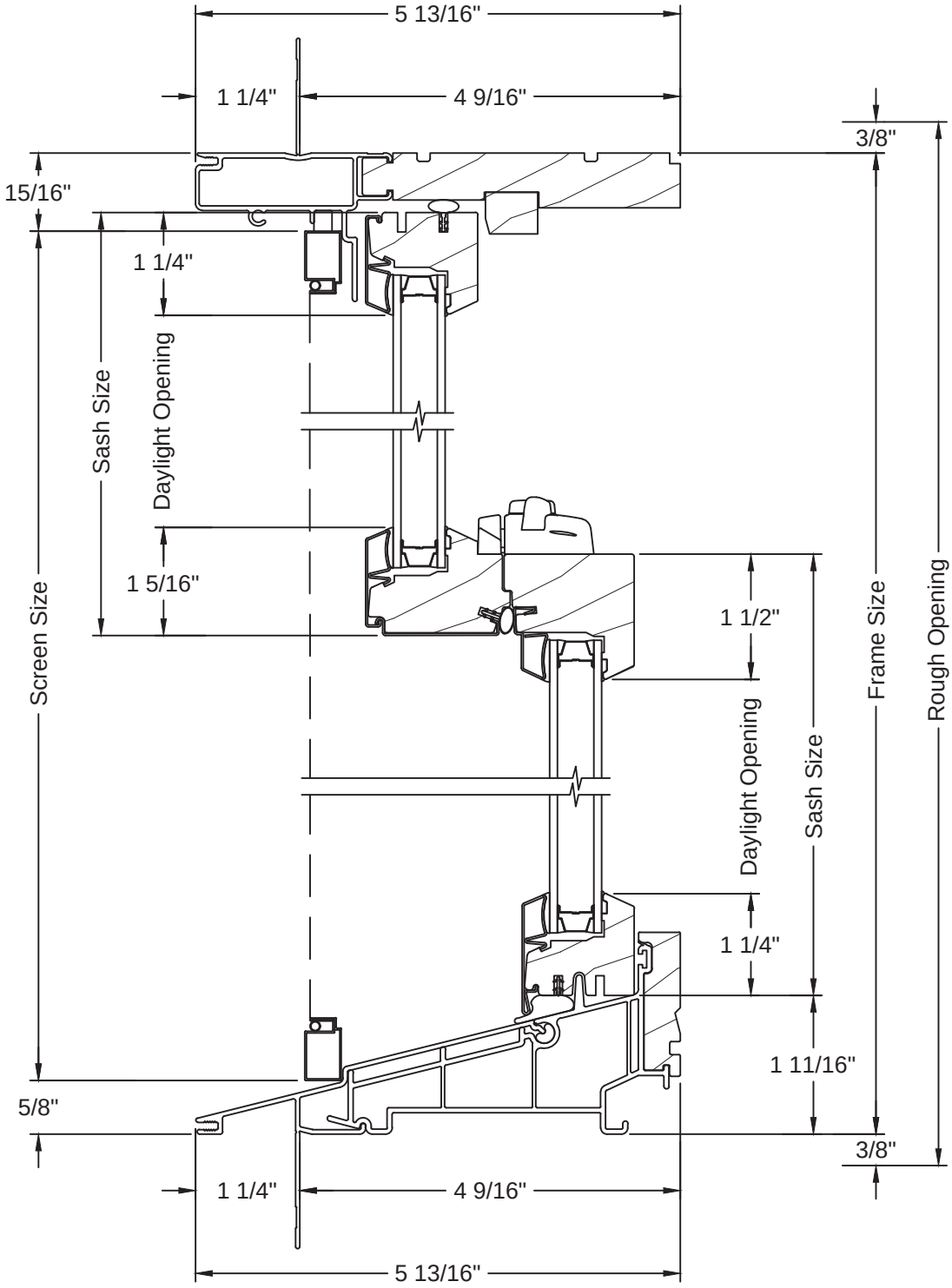

Product specifications may change without notice.
Questions? Consult JELD-WEN customer service.

OPERATOR - HORIZONTAL SECTION

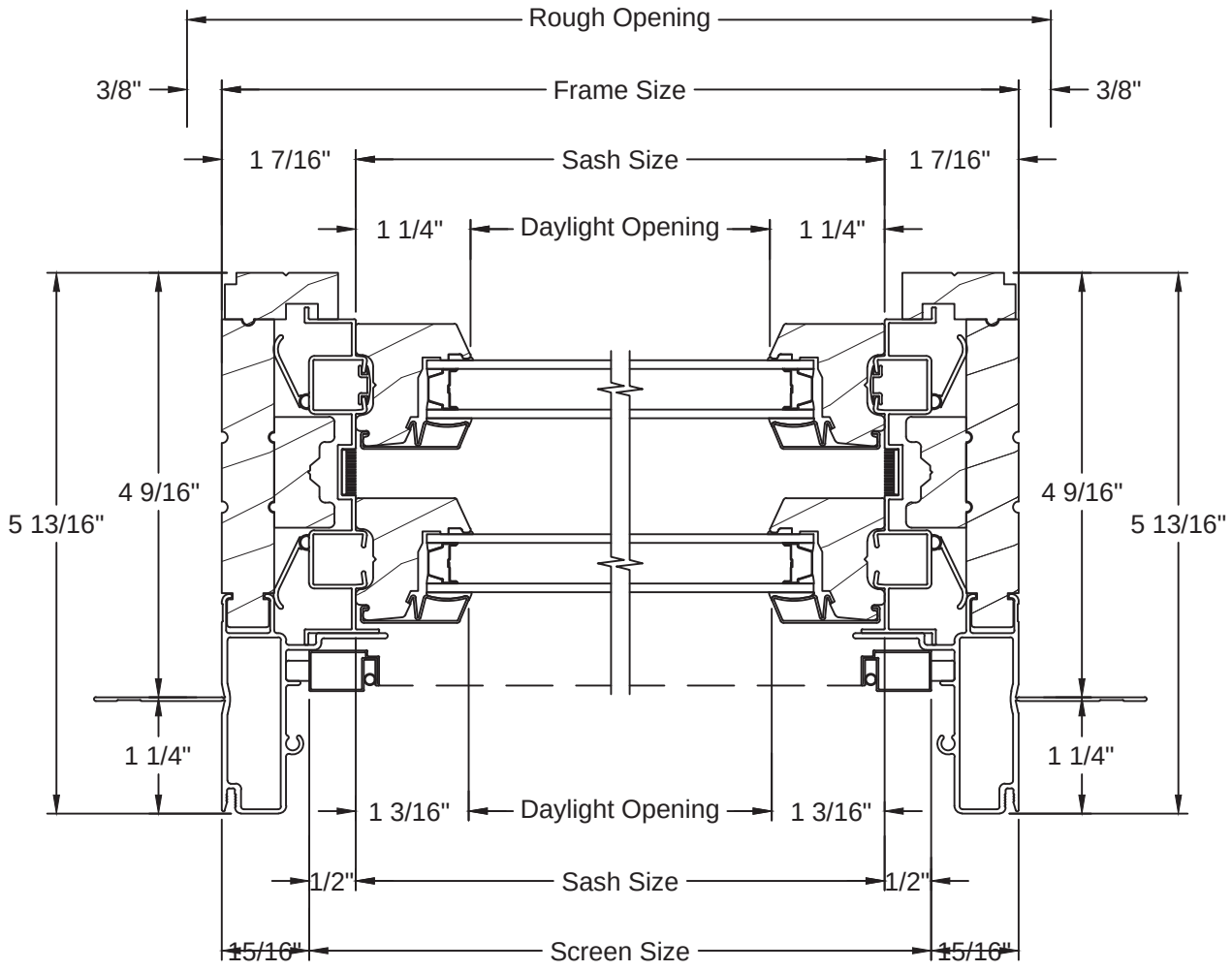

Product specifications may change without notice.
Questions? Consult JELD-WEN customer service.

IN-SASH PICTURE/TRANSOM - VERTICAL SECTION

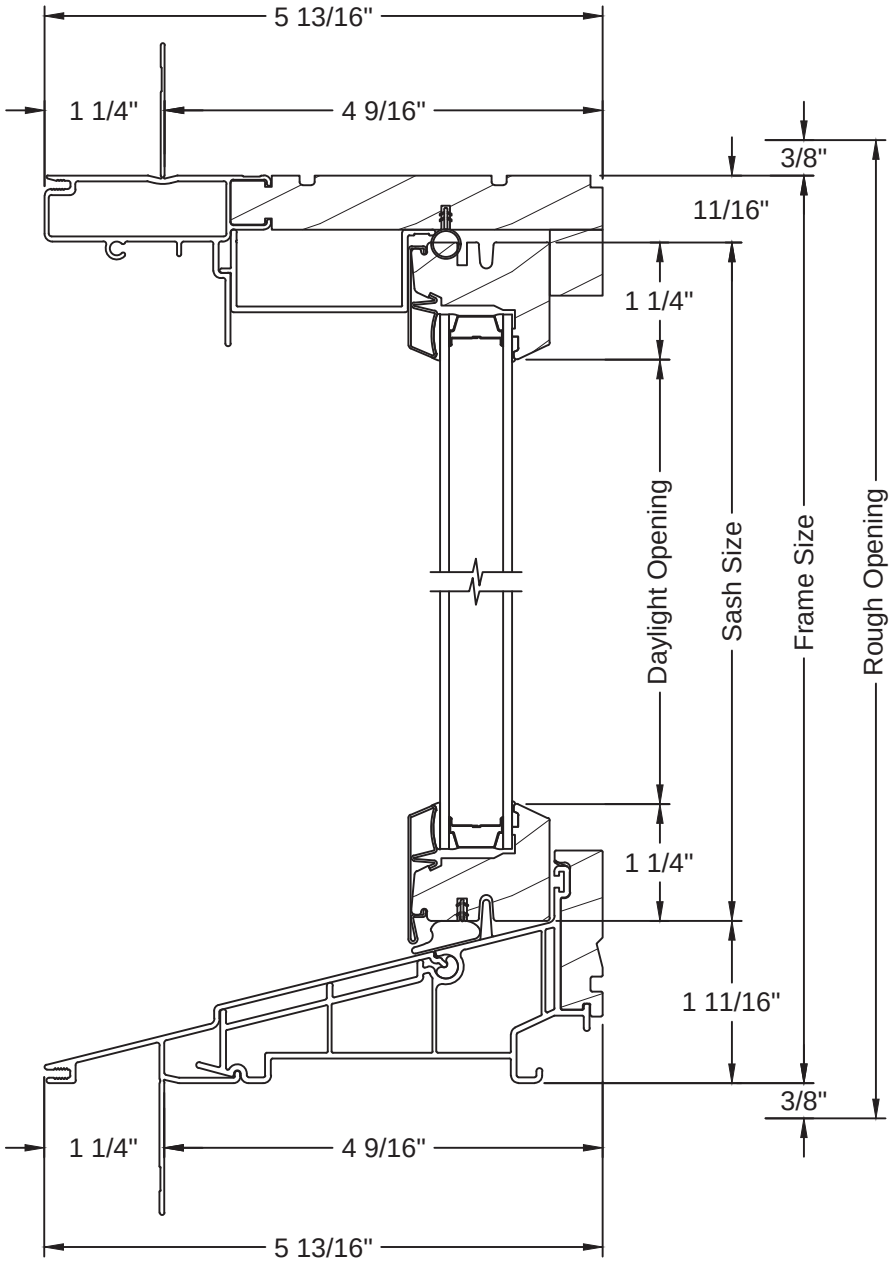

Product specifications may change without notice.
Questions? Consult JELD-WEN customer service.

IN-SASH PICTURE/TRANSOM - HORIZONTAL SECTION

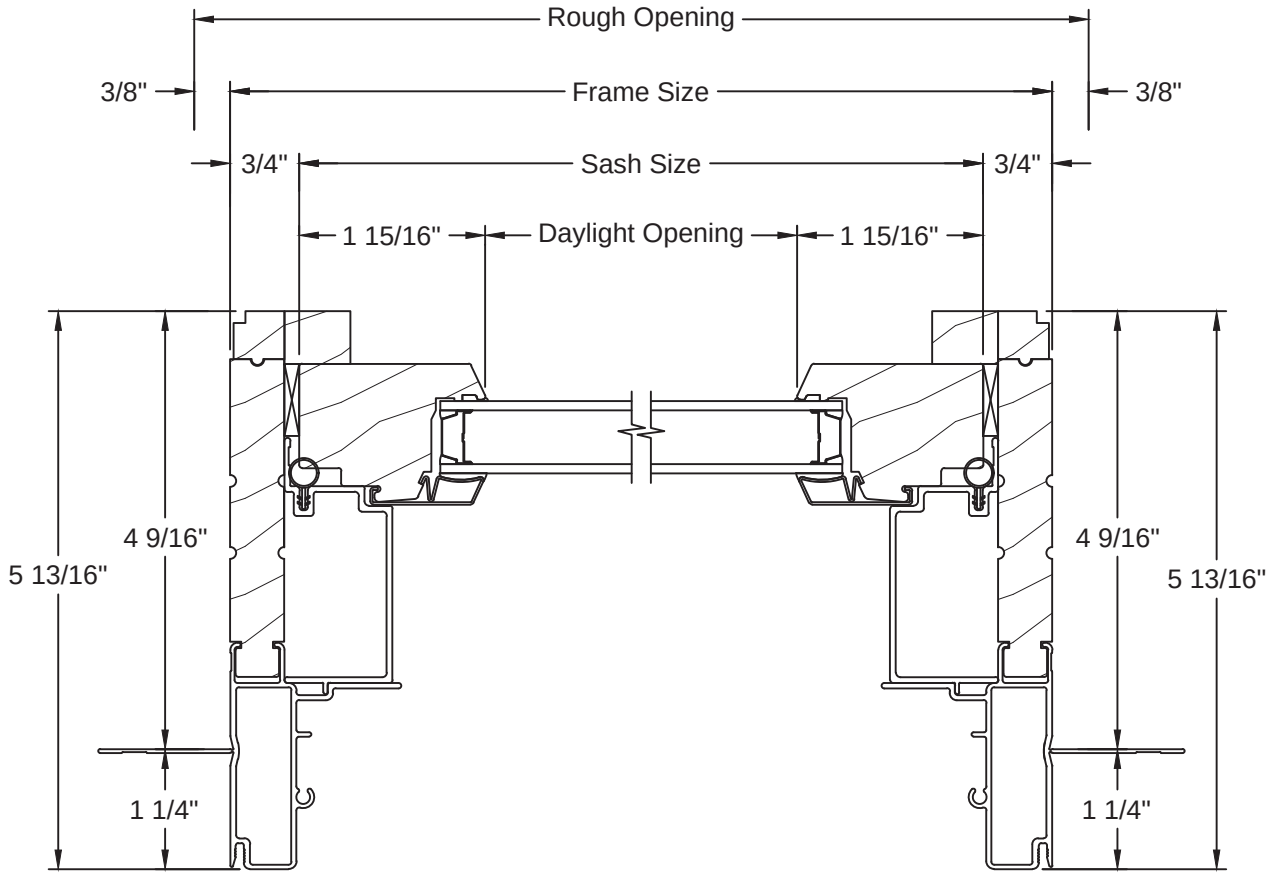

Product specifications may change without notice.
Questions? Consult JELD-WEN customer service.

TABLE OF CONTENTS

r d r
r r
C r
r S
C r
S M r

SD
r
E d r r r S
M

D
S d rd S
r r r
r r r
r r
r r
S
r r r
r r r
r r
r r

Product specifications may change without notice.
Questions? Consult JELD-WEN customer service.

GENERAL INFORMATION

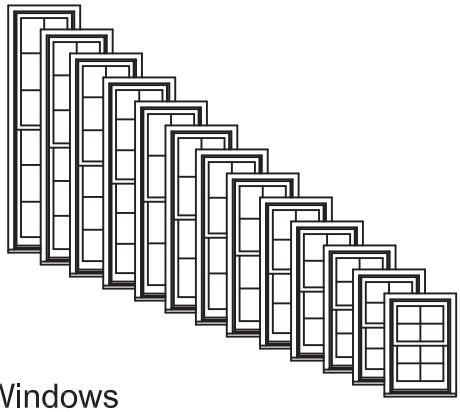

Dimensional Windows

W-2500 Wood Double-Hung windows may be specified as "dimensional", by adjusting the desired rough opening width or height in 1/8" increments from standard.

W-2500 Wood Double-Hung windows feature fully operating upper and lower sash. Counterbalancing is achieved with compression spring extension systems hidden in weatherable PVC jambliners. Operating units are supplied with cam-type sash locks installed. There are several hardware finish options. Refer to the Specifications for available finish options.

Multiple Assemblies

W-2500 Wood Double-Hung windows may be mulled beside other wood double-hungs or wood picture windows, or below wood transom windows, to fulfill a wide variety of needs. Factory assembled mulls are limited in height (100"), width (114"), and a total area (75 square feet).

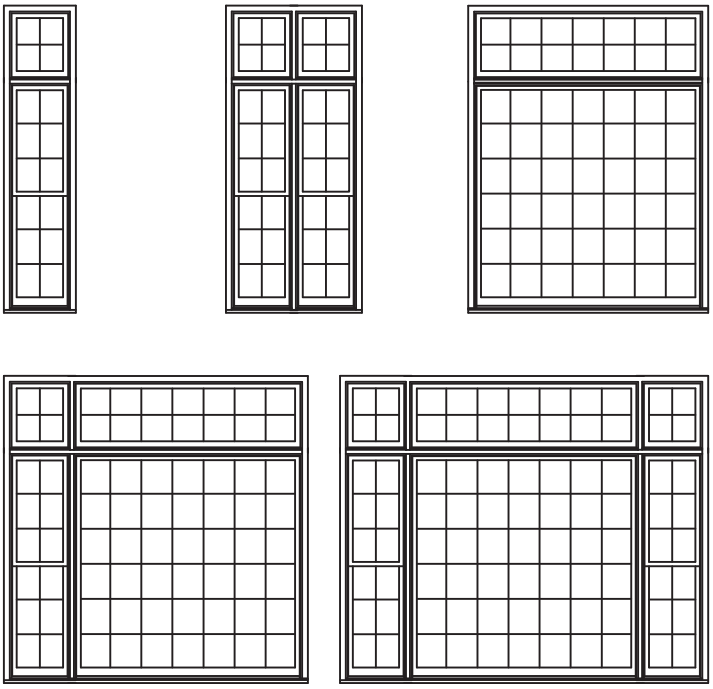

LITE CUT INFORMATION

W-2500 Wood Double-Hung windows are available with removable grilles in 7/8", 1-1/8" and 1-3/8" widths, grilles between glass (GBG), and Simulated Divided Lites. Standard lite cuts are rectangular, and conform to the layouts noted in the charts on the next page. To use the chart, refer to the appropriate table by the type of window and type of bars or grilles the section drawings illustrate. Then simply cross reference the frame Height and Width to determine the standard lite cut.

Lite Cut Options

Special lite cut patterns can include a wide variety of straight line and radius patterns. The illustrations shown here represent just a few of the possibilities. Rectangular, horizontal, vertical and Prairie lite patterns are available in all standard size Wood Double-Hung windows. Uneven, diamond, radius and Gothic lite cuts are available, subject to approval. Approvals are based on the ability to fulfill the design requirement while maintaining the construction integrity of the finished product.

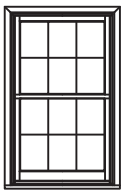
Rectangular

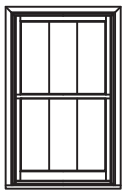
Vertical

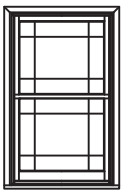
Prairie

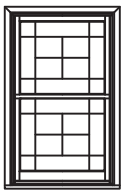
Uneven

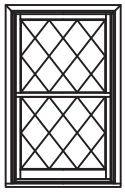
Diamond
SDL Only

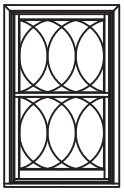
Radius
SDL Only

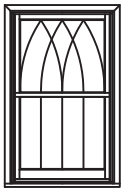
Gothic
SDL Only

Bar Alignment

Alignment of divided lite muntin bars from one window to the next is often required by fine architectural design. Wood grilles, GBG's, and Simulated Divided Lites may be specified with muntin bars aligned.

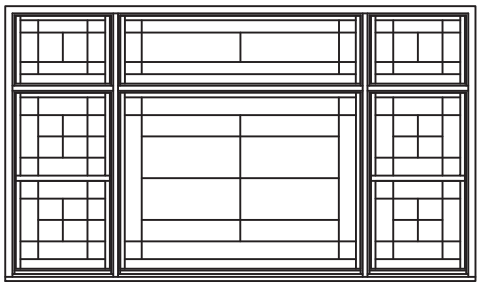

OPERATION & SASH TILTING

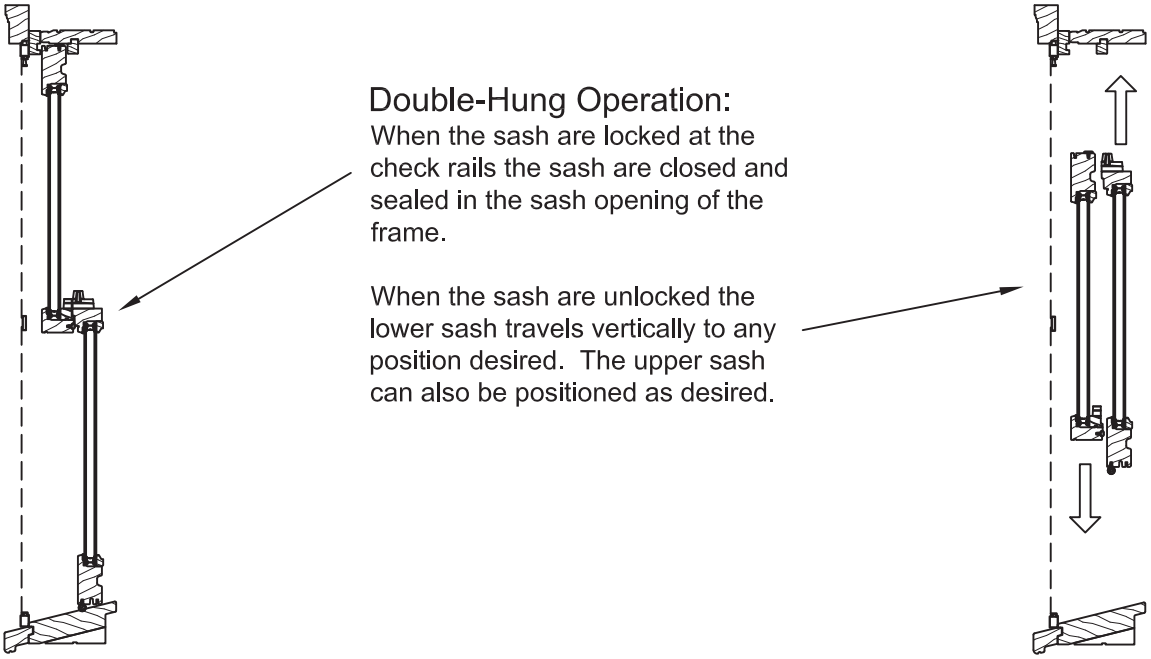

Double-Hung Operation:

When the sash are locked at the check rails the sash are closed and sealed in the sash opening of the frame.

When the sash are unlocked the lower sash travels vertically to any position desired. The upper sash can also be positioned as desired.

Sash Tilting for Washing

The Tradition Plus Double-Hung window will allow the sash to be tilted or removed for easy cleaning.

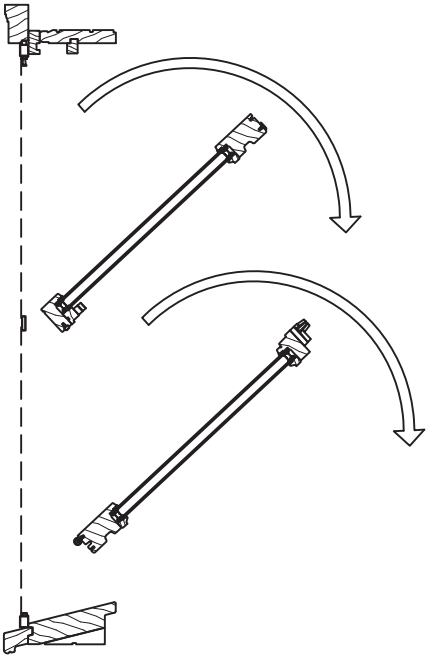

Product specifications may change without notice.
Questions? Consult JELD-WEN customer service.

CLEAR OPENING LAYOUT

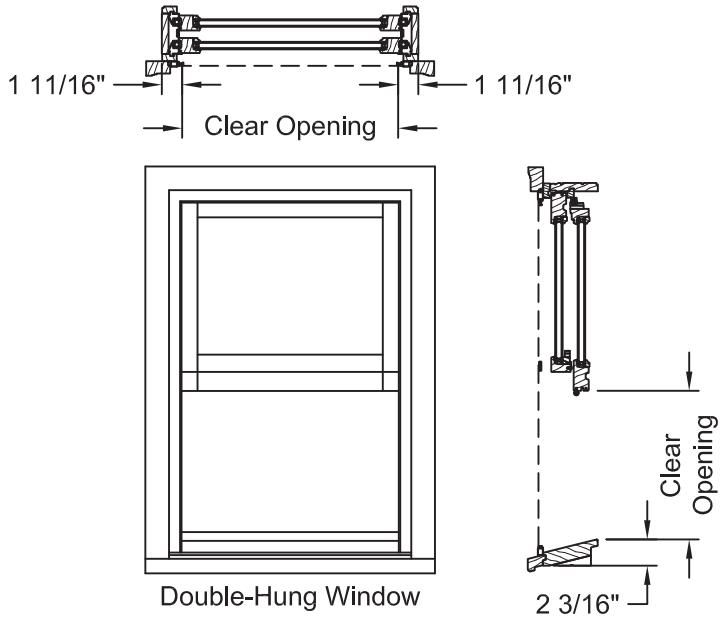

Double-Hung Window

Double-Hung
Clear Opening Formula

Interior Glazed Sash

Vertical
(Frame Height /2) - 4 13/16" = Clear Opening

Horizontal
Frame - 3 9/32" = Clear Opening

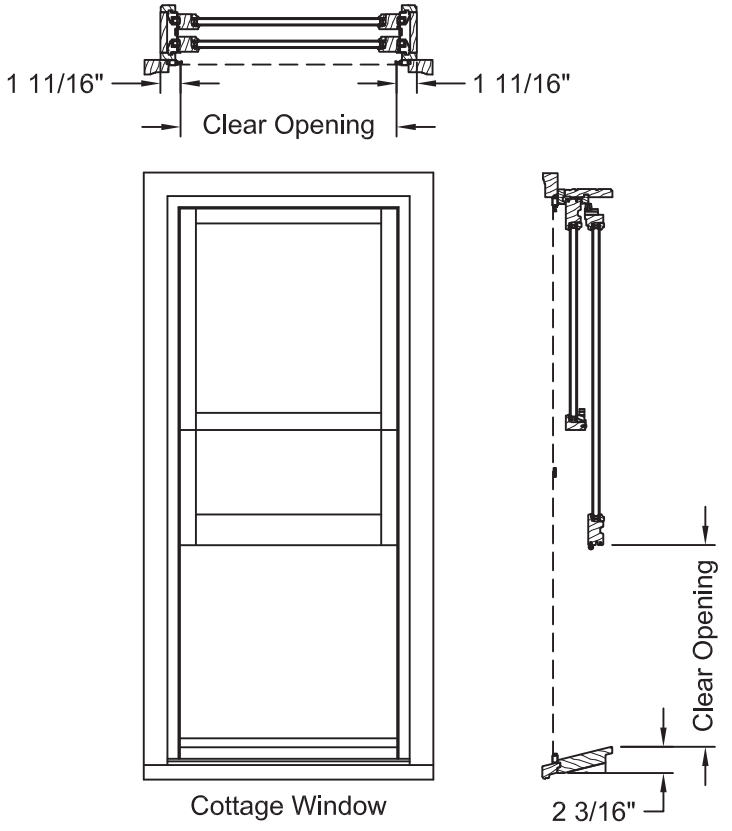

Cottage Window

Cottage & Reverse Cottage

Consult the Design Data Tables for clear opening information. For dimensional units, contact Jeld-Wen - Bend Window Division Technical Services Department for Clear Opening information.

UNIT SIZING & MASONRY OPENINGS

General Notes:

Unit size is always the maximum size of the window with or without trim.

Masonry Opening:

Masonry opening is 1/2" over (height and width) the unit size or the outside of the trim of the window.

Rough Opening:

Rough opening is always 3/4" over frame size of the window.

[illegible]		
[illegible]	[illegible]	[illegible]
[illegible]	A	[illegible]
[illegible]	[illegible]	[illegible]
[illegible]	C	[illegible]
[illegible]	D	[illegible]

Horizontal exterior trim offerings below are the same with or without sill nose.

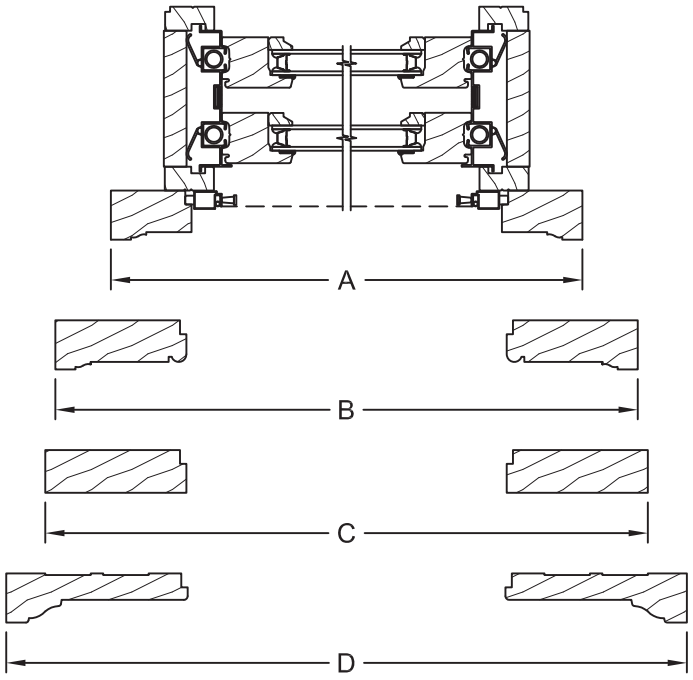

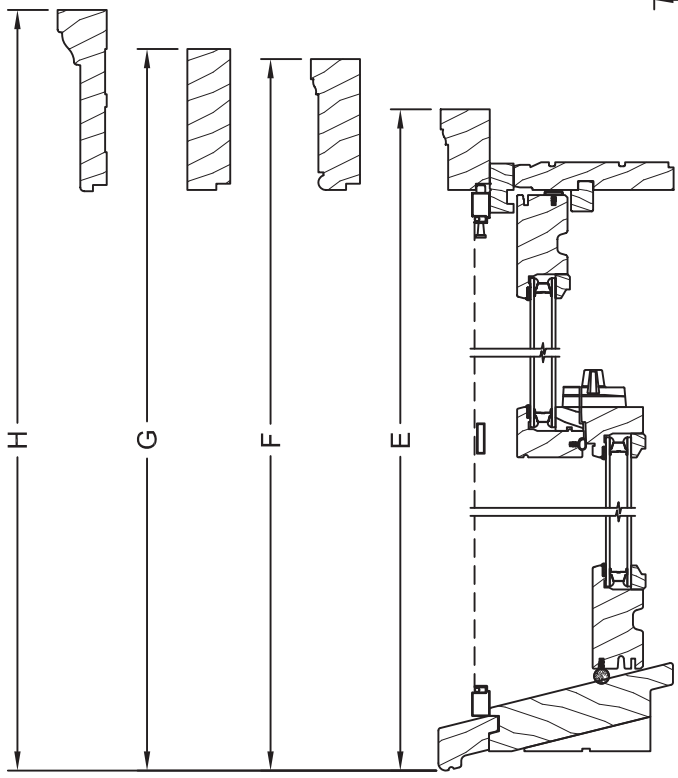

Vertical exterior trim offerings with standard sill nosing. Trim on 3 sides.

[illegible]		
[illegible]	[illegible]	[illegible]
[illegible]	E	[illegible]
[illegible]	[illegible]	[illegible]
[illegible]	C	[illegible]
[illegible]	[illegible]	[illegible]

SDL & GBG OPTIONS

Exterior ← → Interior

SDL Options

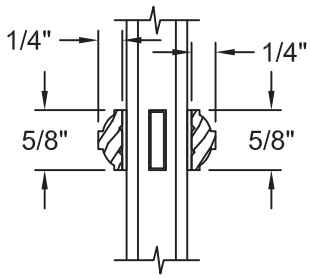

5/8" Bead SDL

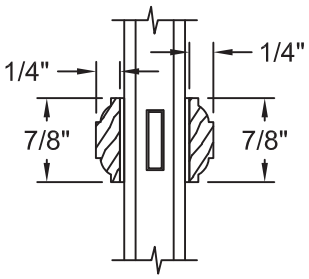

7/8" Bead SDL

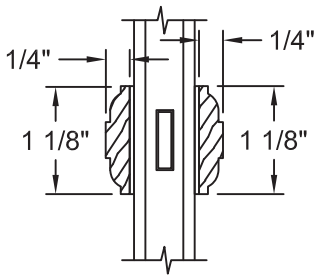

1 1/8" Bead SDL

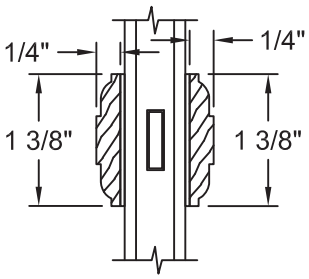

1 3/8" Bead SDL

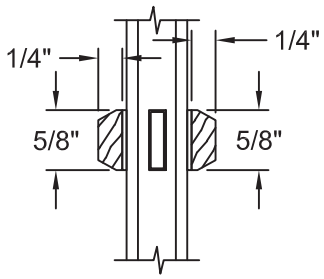

5/8" Putty SDL

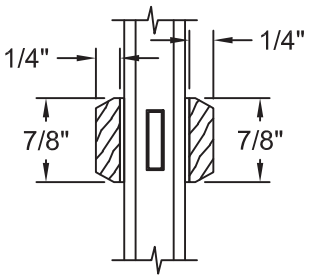

7/8" Putty SDL

GBG Options

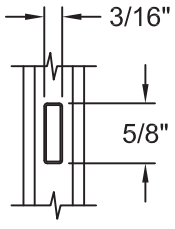

5/8" Grille

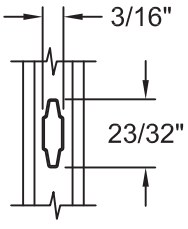

23/32" Grille

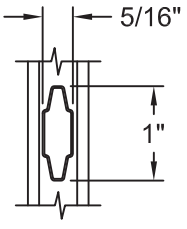

1" Grille

Note: Various Combinations of the SDL Bars Shown are Available

TRIM OPTIONS

Exterior Trim

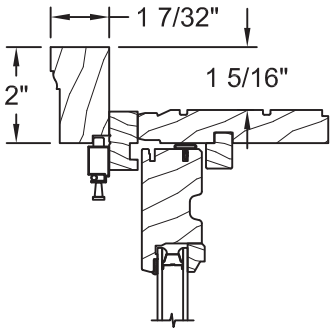

Brickmould

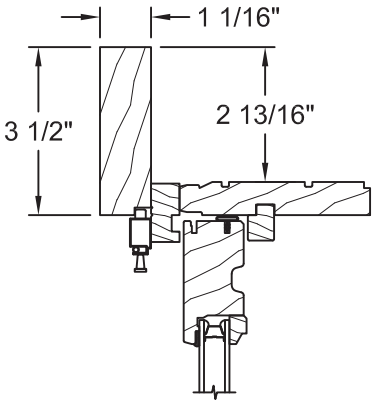

3 1/2" Flat Casing

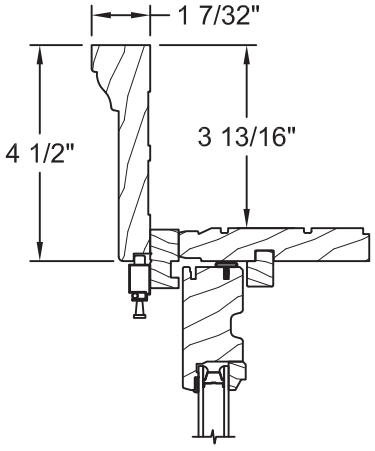

1 X 4 Backband

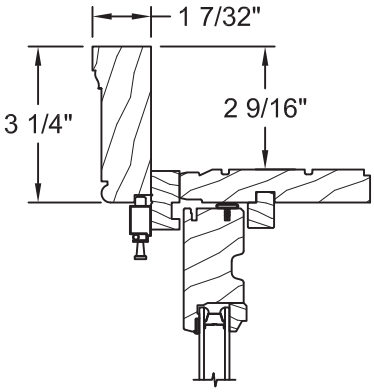

Williamsburg

Sill Options

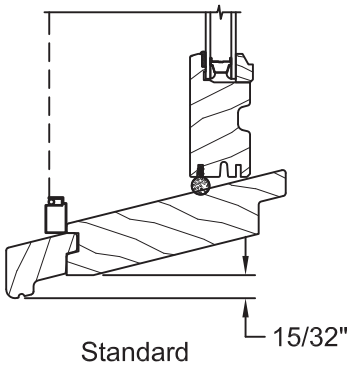

Standard

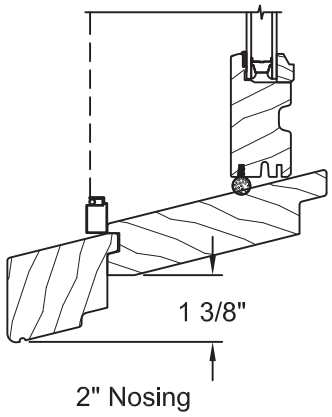

2" Nosing

Product specifications may change without notice.
Questions? Consult JELD-WEN customer service.

JAMB EXTENDER & PREP FOR STOOL OPTIONS

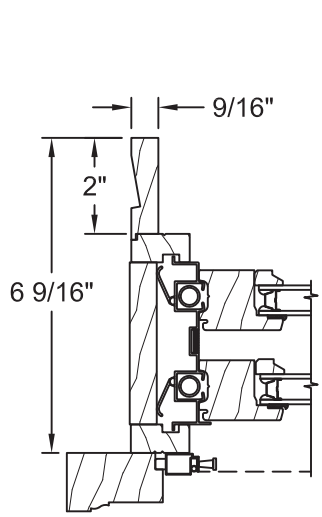

6 9/16" Wall
9/16" Jamb Thickness
(Option)

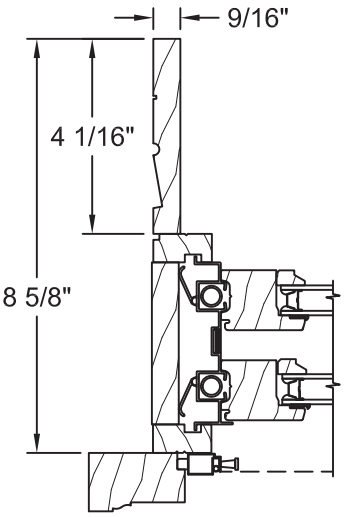

8 5/8" Wall

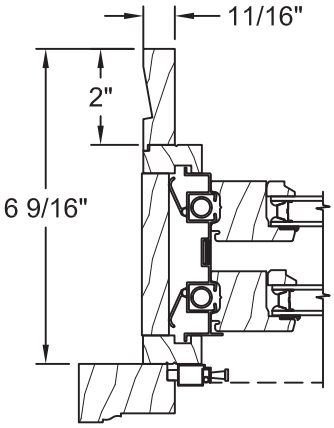

6 9/16" Wall
4/4 Jamb Thickness
(Standard)

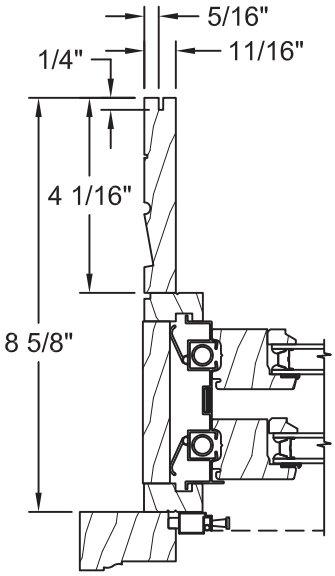

8 5/8" Wall
4/4 Jamb Thickness
(Standard)
Kerfed Extension Shown

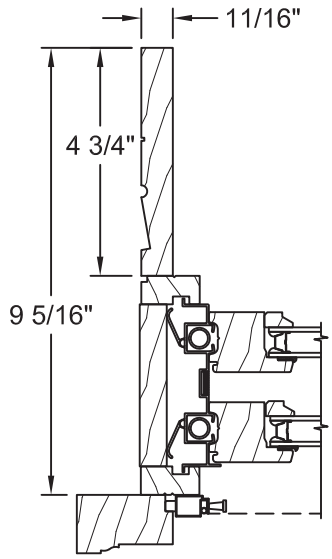

9 5/16" Wall

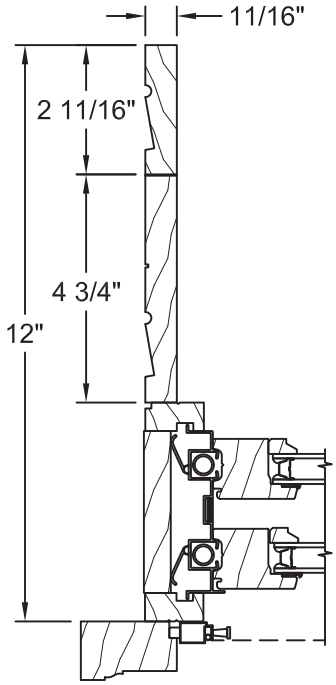

12" Wall
4/4 Jamb Thickness (Standard)
2 PC Jamb Extension Shown

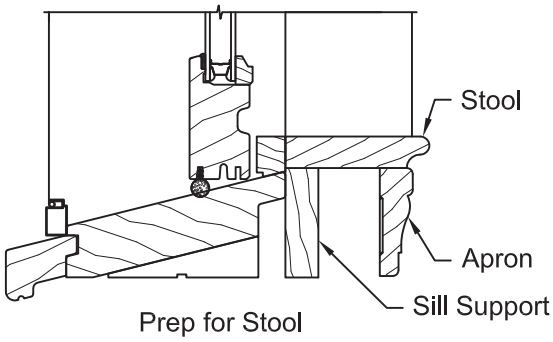

Prep for Stool

Note: Stool, apron, and sill support are applied by trim carpenter after window is installed and are not provided by JELD-WEN.
Unit is shipped without sill jamb extenders.

MULLION OPTIONS

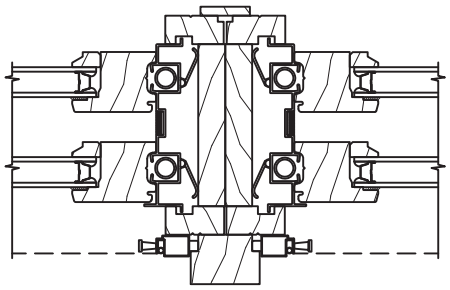

Twin Operating Double-Hung

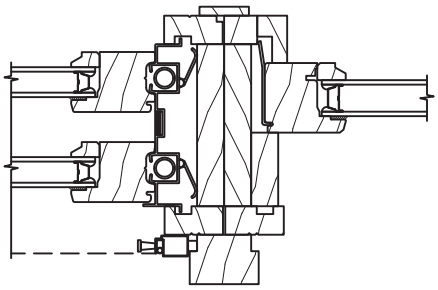

Double-Hung with
Double-Hung Picture

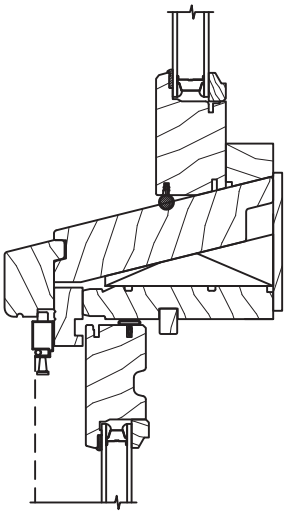

Double-Hung Transom
Over Double-Hung

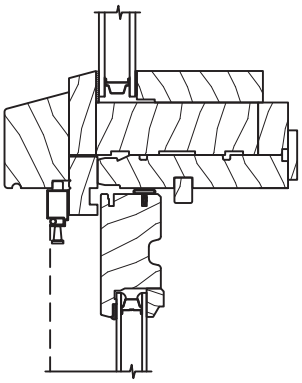

Direct Set Geometric
Over Double-Hung

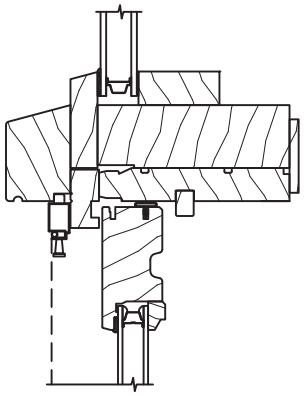

Direct Set Radius
Over Double-Hung

Product specifications may change without notice.
Questions? Consult JELD-WEN customer service.

MULLION OPTIONS

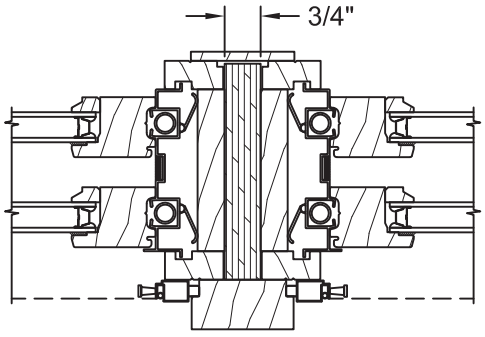

3/4" Wood Spread Mull

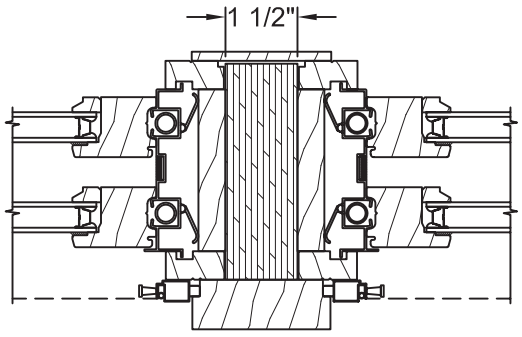

1 1/2" Wood Spread Mull

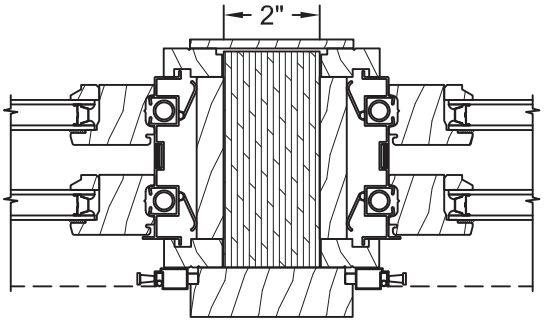

2" Wood Spread Mull

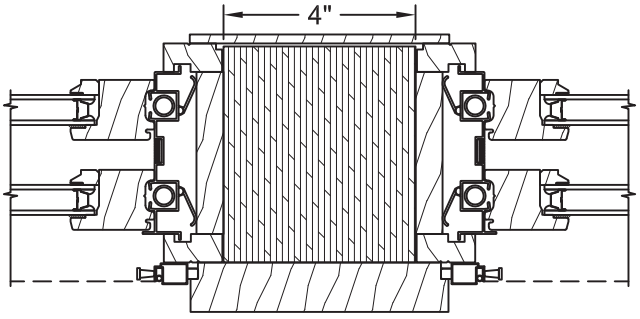

4" Wood Spread Mull

Product specifications may change without notice.
Questions? Consult JELD-WEN customer service.

OPERATOR - VERTICAL SECTION

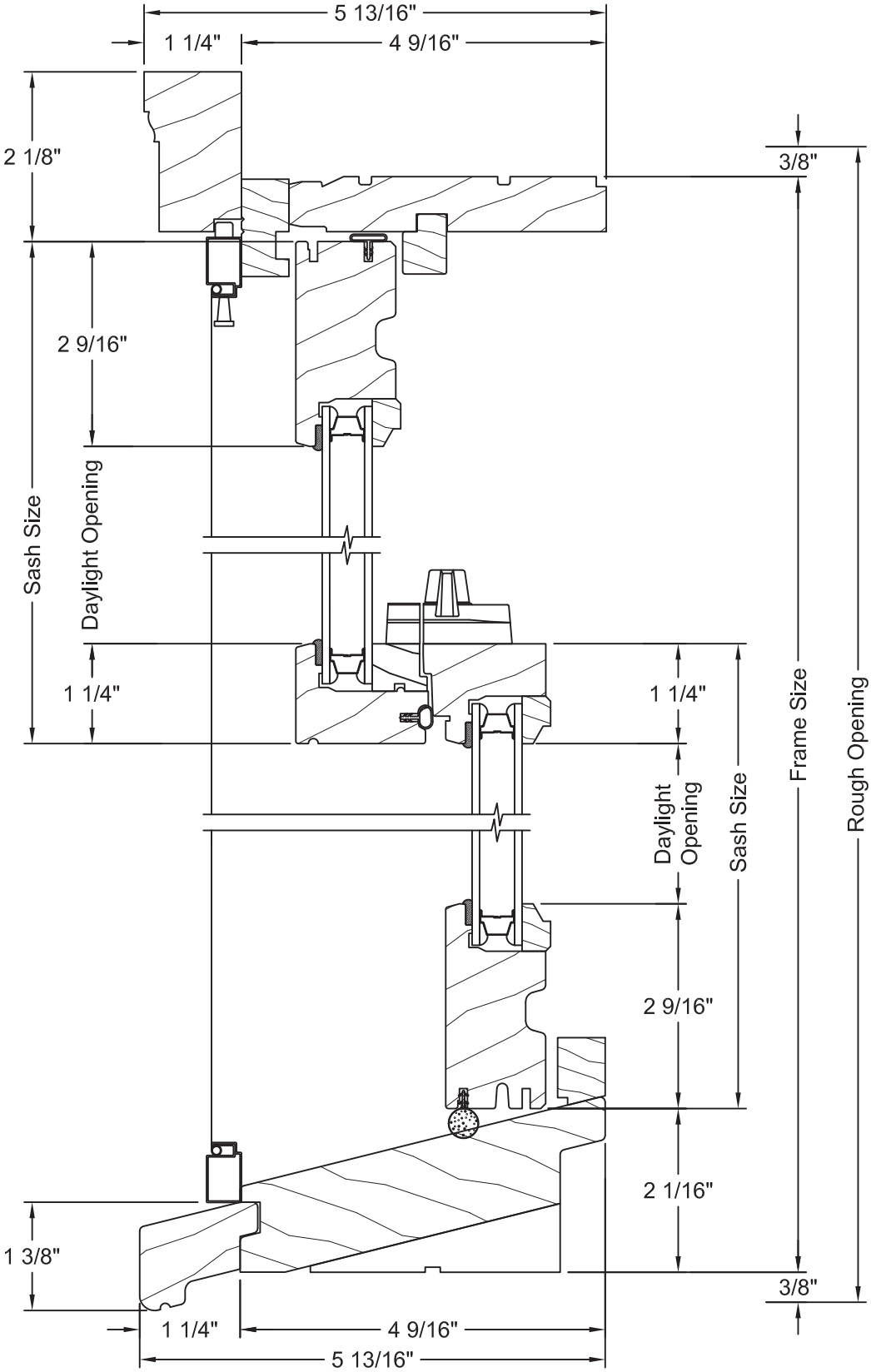

Product specifications may change without notice.
Questions? Consult JELD-WEN customer service.

OPERATOR - HORIZONTAL SECTION

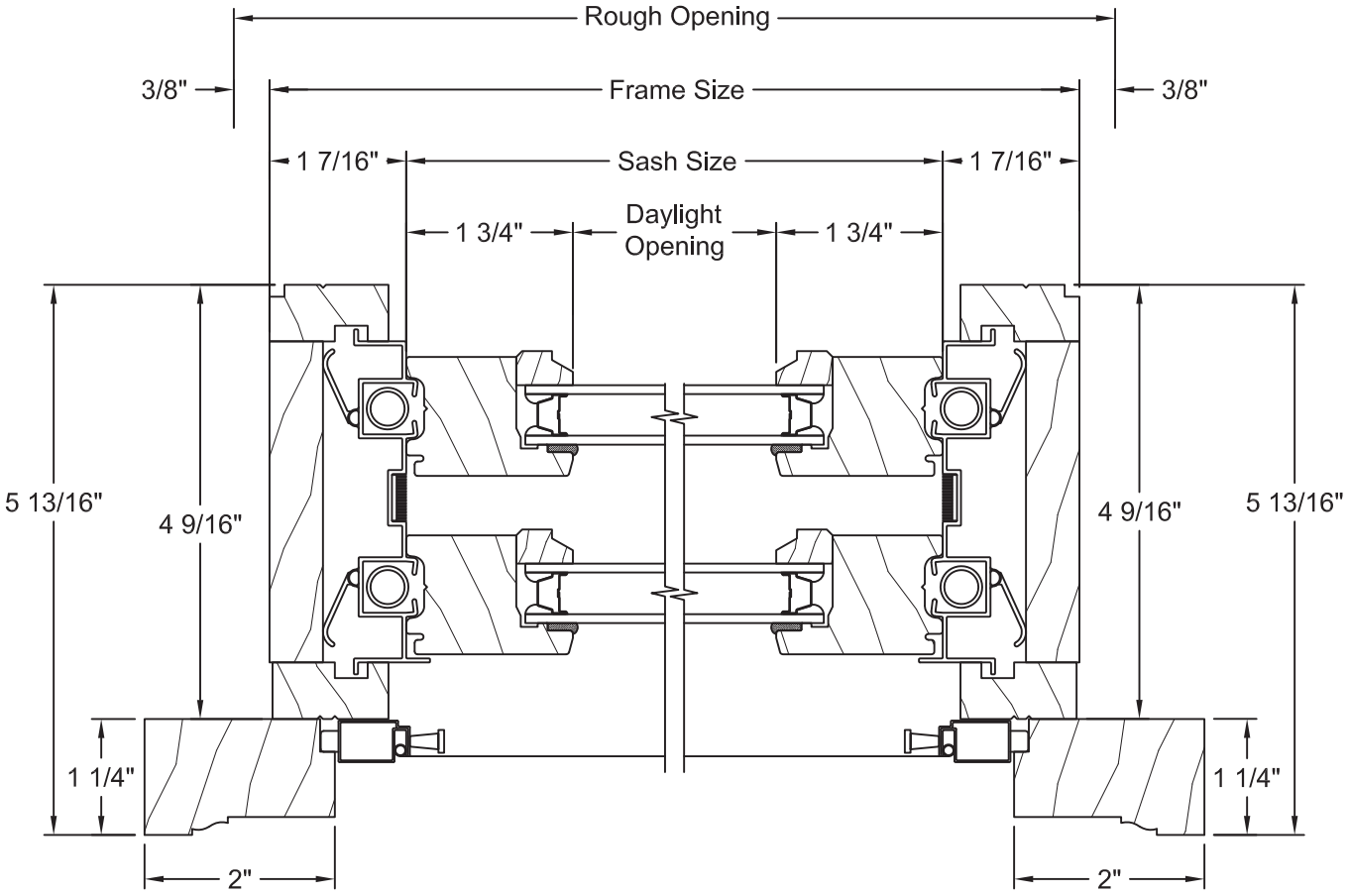

Product specifications may change without notice.
Questions? Consult JELD-WEN customer service.

PICTURE - VERTICAL SECTION

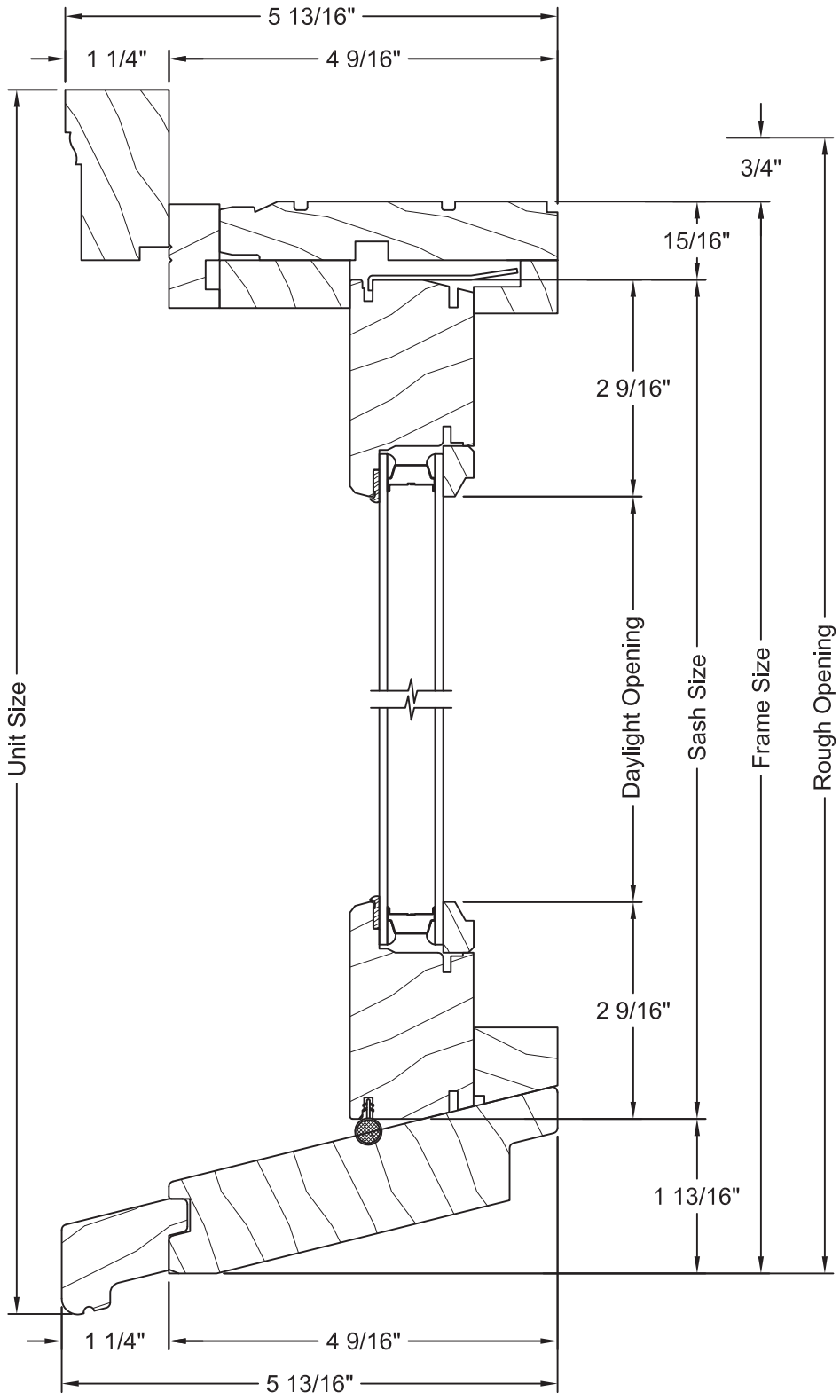

PICTURE - HORIZONTAL SECTION

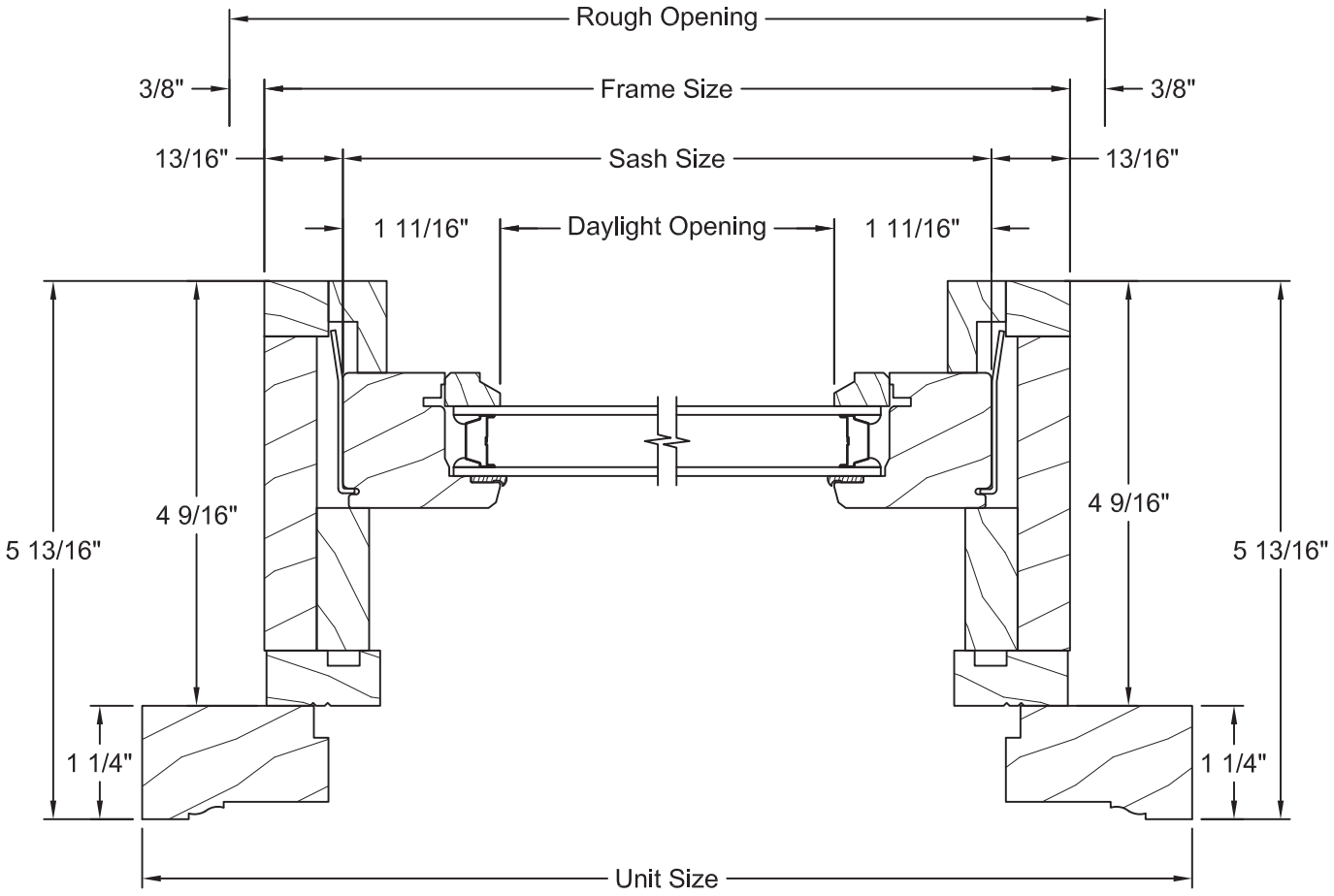

Product specifications may change without notice.
Questions? Consult JELD-WEN customer service.

POCKET OPERATOR - VERTICAL SECTION

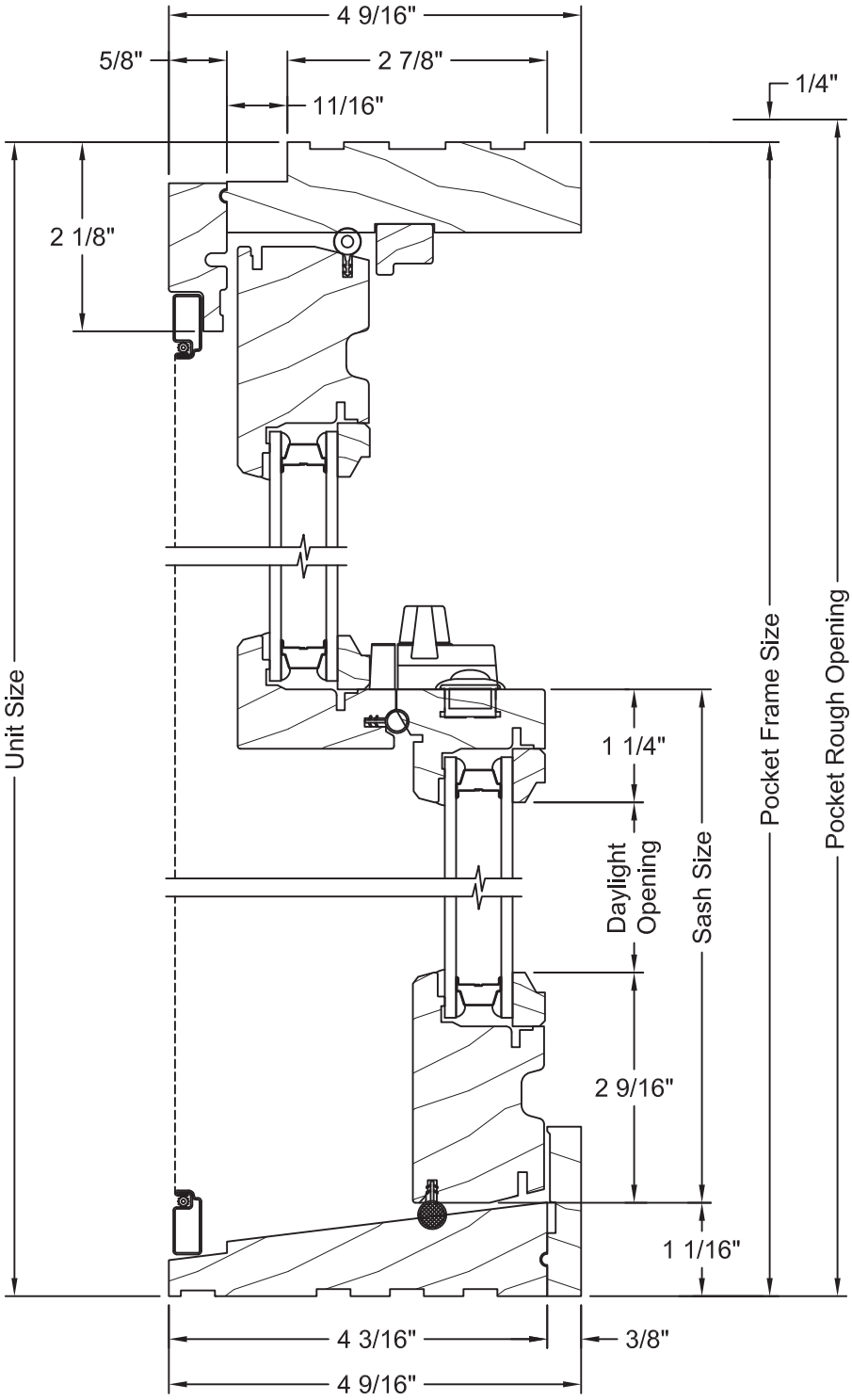

POCKET OPERATOR - HORIZONTAL SECTION

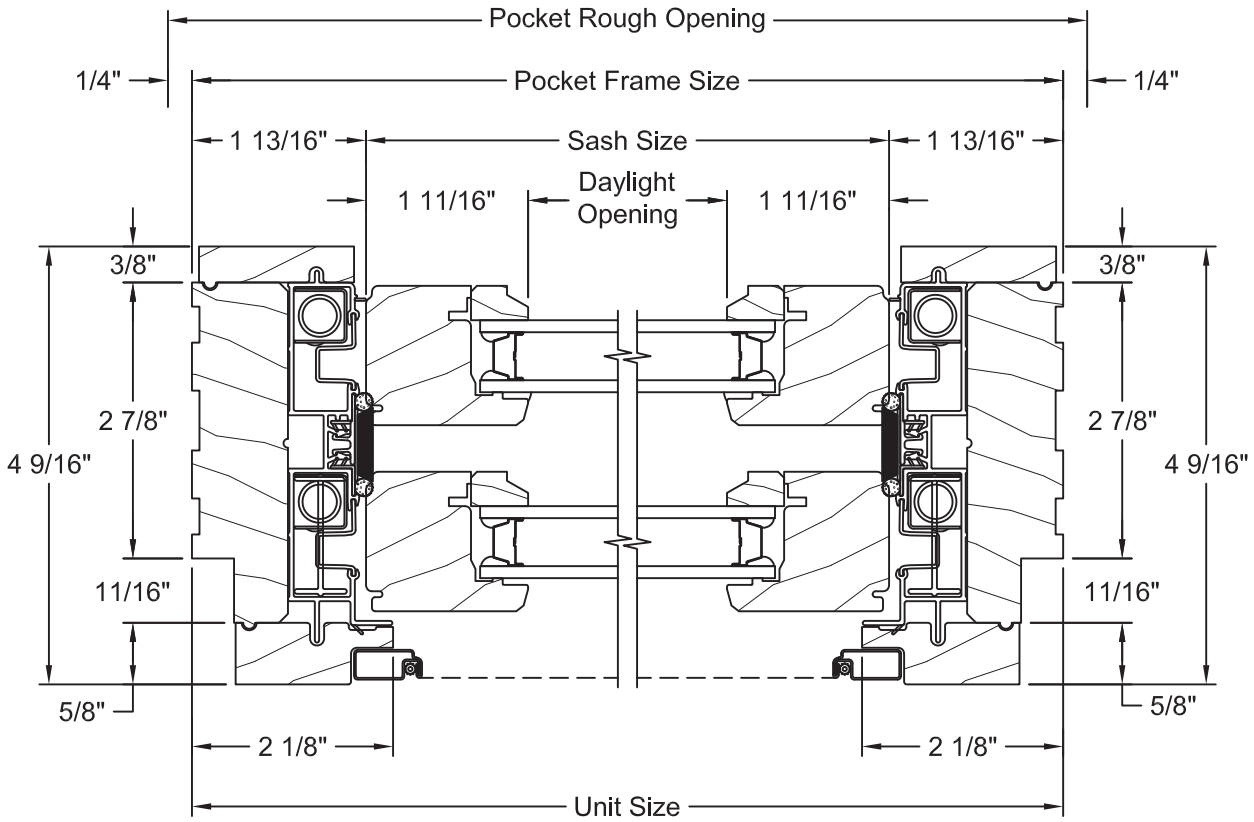

Product specifications may change without notice.
Questions? Consult JELD-WEN customer service.

POCKET PICTURE - VERTICAL SECTION

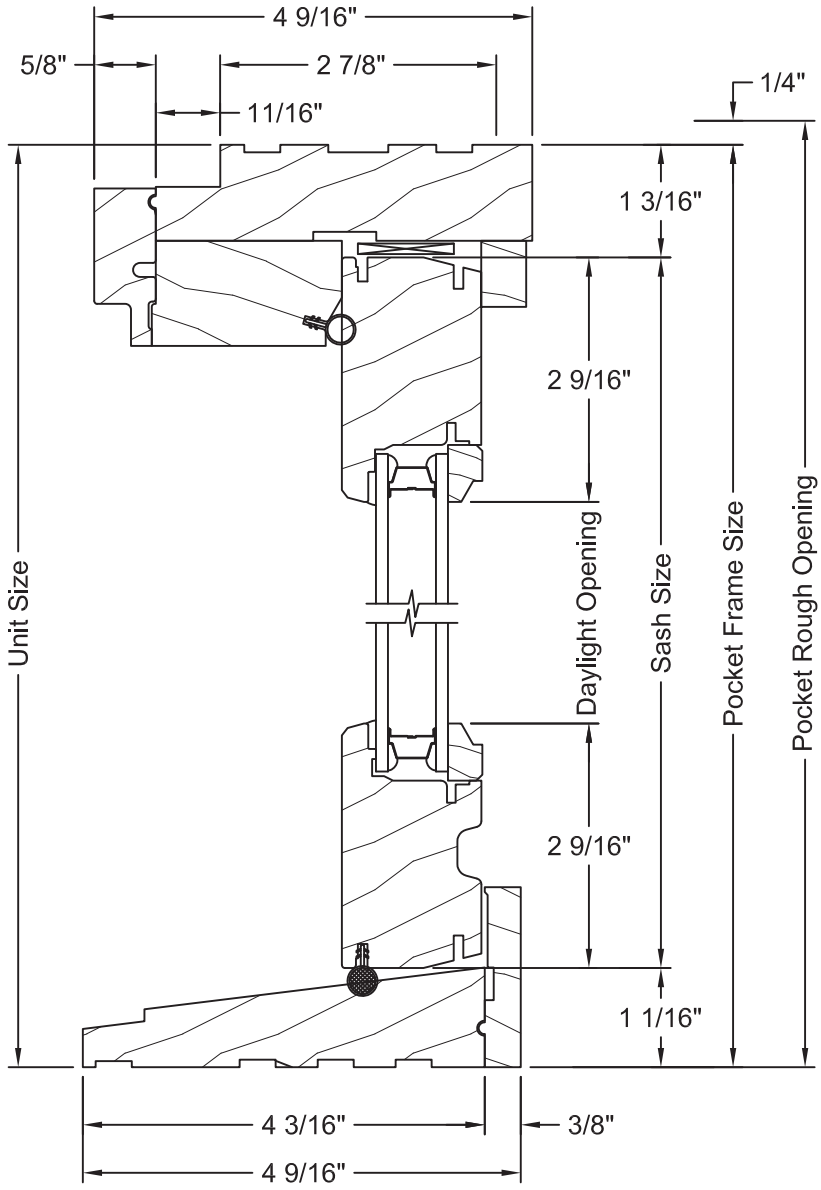

Product specifications may change without notice.
Questions? Consult JELD-WEN customer service.

POCKET PICTURE - HORIZONTAL SECTION

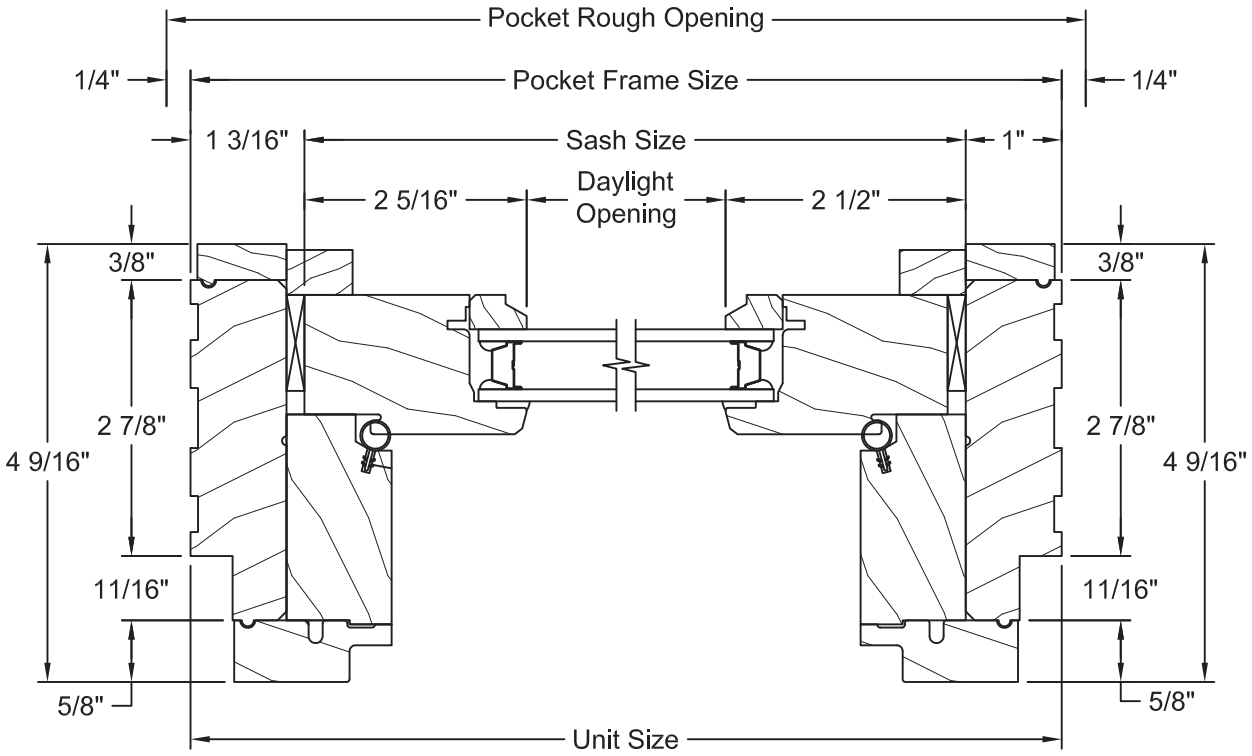

JamesHardie

Siding | Trim

Achieve authentic character and

UNCOMPROMISING PERFORMANCE.

SOUTH
Product
Catalog

It's time to
BUILD SOMETHING TIMELESS.

JamesHardie®

Installed on over 8 million homes* from coast to coast, James Hardie® fiber cement siding products are designed to resist the most extreme conditions while romancing the senses. Enjoy the warm, natural character of wood with unprecedented peace of mind. It's easy to see what makes James Hardie the market leader.

UNIQUE FORMULATION

We use the highest quality raw materials and proprietary additives for enhanced strength and moisture protection.

FINISHING TECHNOLOGY

Baked-on color delivers a beautiful finish that resists fading and makes a lasting impression.

COMPLETE EXTERIOR™

Offers homeowners an unrivaled collection of design options with exceptional warranties through a single, trusted manufacturer.

*Estimate based on total James Hardie siding sales through 2016 and average housing unit size.

CONTENTS

4	HardieZone® System
6	Unique Formulation
8	Finishing Technology
10	James Hardie Complete Exterior™
12	HardiePlank® Lap Siding
14	HardiePanel® Vertical Siding
16	HardieShingle® Siding
18	HardieTrim® Boards
20	HardieSoffit® Panels
22	Color Inspiration
24	Color Selection
26	HardieWrap® Weather Barrier
27	Finishing Touches
28	The James Hardie Difference
30	Warranty and Endorsements

HardieZone® System

Only James Hardie fiber cement products are Engineered for Climate®. In the northern U.S. and Canada, HZ5® products resist shrinking, swelling and cracking even after years of wet or freezing conditions. HZ10® products help protect homes from hot, humid conditions, blistering sun and more.

With James Hardie siding and trim, homeowners have an exterior that's tougher than the elements and easy on the eyes.

NO MATTER WHAT NATURE BRINGS

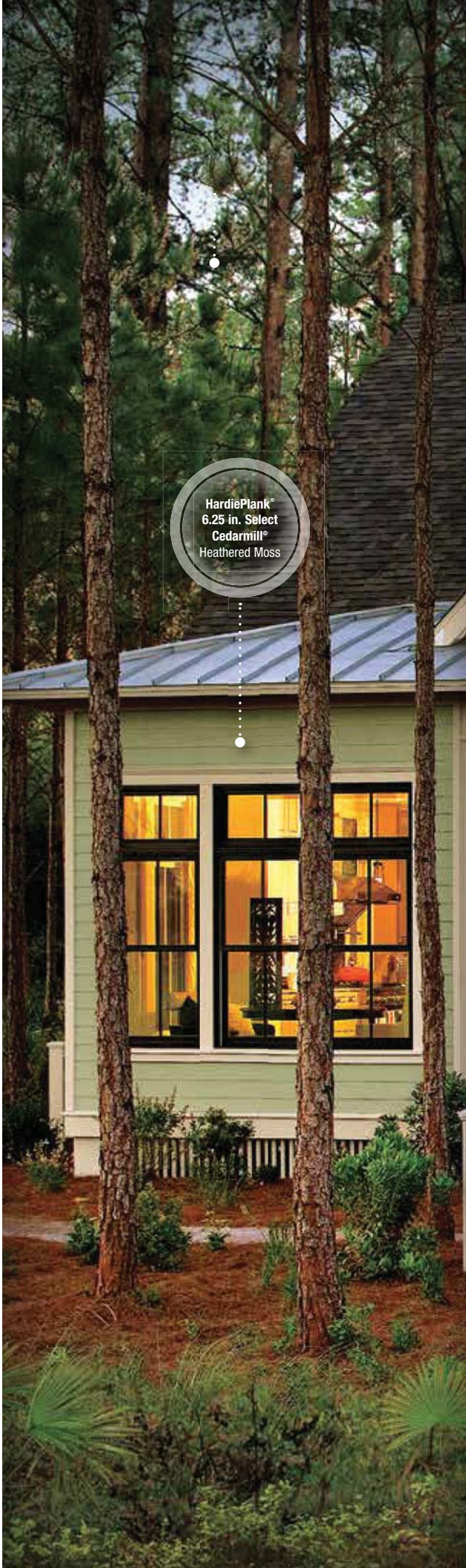

HZ10®

TOUGHER THAN THE ELEMENTS

- **Stands up to storms and harsh weather**
- **Water resistant to protect against swelling, warping and cracking; also resists mold damage**
- **Won't be eaten by animals or insects**
- **Fire resistant**
- **Helps reduce time and money spent on maintenance**

Resist the elements **WITH IRRESISTIBLE CHARM.**

Unique Formulation
HZ10® Substrate

Not all fiber cement is the same. James Hardie HZ10 products contain the highest quality raw materials. Our unique formulation, combined with innovative product design and manufacturing processes, create a substrate that is specifically engineered to resist moisture, cracking, shrinking and swelling for increased durability and workability.

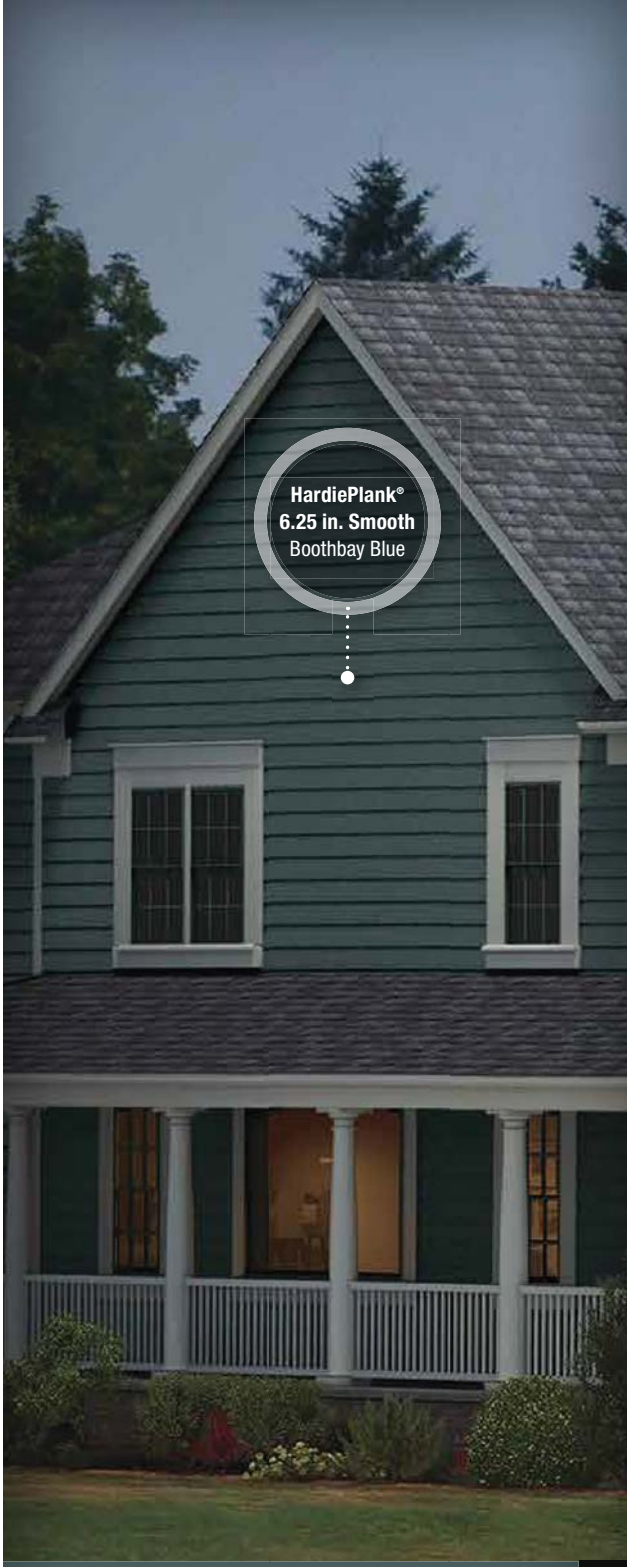

PROPRIETARY ENHANCEMENTS CREATE **DURABLE JAMES HARDIE® SIDING**

Perfect balance of strength and workability

Our balance of high-quality Portland cement, sand and cellulose fiber delivers the best combination of strength and workability.

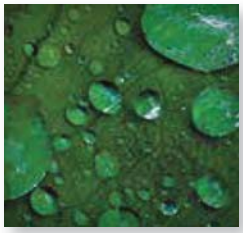

Enhanced moisture resistance for unmatched durability

Patented and proprietary additives are chemically bonded within the HZ10 substrate matrix to provide durable moisture resistance.

Increased dimensional stability

Our siding is engineered at the microscopic level to create a fiber cement composite with superior dimensional stability that helps protect against shrinking and splitting.

Integrity is ingrained
IN EVERYTHING WE DO.

HardieTrim®
5/4 x 5.5 in.
Arctic White

UNMATCHED INVESTMENT IN MANUFACTURING SCALE AND PRODUCT INNOVATION

- Largest manufacturer of fiber cement in North America
- 5x more capacity than our largest competitor
- More than 100 process and product quality checks
- 100+ scientists and engineers provide dedicated resources for continuous innovation in manufacturing and product development
- More U.S. fiber cement patents than any competitor

YOUR RETURNS ON OUR INVESTMENT

- Superior siding and trim performance for beauty that lasts
- Consistency in appearance from board to board
- Natural-looking profiles for authentic character

Finishing Technology

Gold Primer

A quality primer is the first step to ensuring that the paint color you select beautifully expresses a home's true character now – and for years to come. Our distinctive gold primer is climate-tested and engineered for use with paint on James Hardie fiber cement siding products. It helps to provide consistent, long-lasting paint adhesion, even in the most demanding conditions.

ColorPlus® Technology

Our advanced ColorPlus® Technology finishes deliver the ultimate in aesthetics and performance. Our products aren't simply painted at the factory. Multiple coats of color are baked onto the board, giving homes a durable, rich, consistent color no field-applied house paint can match.

- Superior finish adhesion
- Superior color retention
- Superior UV resistance
- Year-round installation

For timeless beauty
BEGIN WITH THE FINISH.

Exceptional warranties through a
SINGLE, TRUSTED MANUFACTURER.

James Hardie Complete Exterior™

Top to bottom, our exterior product line is defined by excellent performance, aesthetics and design options.

Provide protection from the elements, showcase a homeowner's individual style and install peace of mind with exceptional warranties through a single, trusted manufacturer.

HardiePlank®

Sleek and strong, HardiePlank® lap siding is not just our best-selling product – it's the most popular brand of siding in America.

With a full spectrum of colors and textures, homeowners can enjoy protection from the elements and the versatility to make their dream home a reality. From Victorians to Colonials, HardiePlank lap siding sets the standard in exterior cladding.

A classic look for **THE HOME OF THEIR DREAMS.**

SELECT CEDARMILL©*

Woodstock Brown

SMOOTH*

Countrylane Red

Thickness	5/16 in.					
Length	12 ft. planks					
Width	5.25 in.	6.25 in.	7.25 in.	8.25 in.	9.25 in.	12 in.
Exposure	4 in.	5 in.	6 in.	7 in.	8 in.	10.75 in.
ColorPlus Pcs./Pallet	324	280	252	210		
Prime Pcs./Pallet	360	308	252	230	190	152
Pcs./Sq.	25.0	20.0	16.7	14.3	12.5	9.3

CUSTOM BEADED CEDARMILL©

Light Mist

CUSTOM BEADED SMOOTH

Heathered Moss

Thickness	5/16 in.
Length	12 ft. planks
Width	8.25 in.
Exposure	7 in.
ColorPlus Pcs./Pallet	210
Prime Pcs./Pallet	240
Pcs./Sq.	14.3

CUSTOM COLONIAL ROUGHSAWN®

Mountain Sage

CUSTOM COLONIAL SMOOTH®

Timber Bark

Thickness	5/16 in.
Length	12 ft. planks
Width	8 in.
Exposure	6.75 in.
ColorPlus Pcs./Pallet	216
Prime Pcs./Pallet	240
Pcs./Sq.	14.9

*6.25 in. and 8.25 in. also available in coastal colors. 9.25 in. and 12 in. only available primed.

Products are available primed or with ColorPlus Technology finishes. For more details, visit **jameshardiepros.com**

HardiePanel®

HardiePanel® vertical siding delivers style and substance. When combined with HardieTrim® boards, it achieves the rustic board-and-batten look that defines cottage charm. The covered seams contribute to a well-insulated home.

Its crisp, clean lines make HardiePanel vertical siding a smart choice for strong, contemporary designs.

True to the tradition of **PERFORMANCE AND BEAUTY.**

SELECT CEDARMILL©

Navajo Beige

Thickness	5/16 in.		
Size	4 ft. x 8 ft.	4 ft. x 9 ft.*	4 ft. x 10 ft.
Pcs./Pallet	50	50	50
Pcs./Sq.	3.2	2.8	2.5

SMOOTH

Evening Blue

Thickness	5/16 in.		
Size	4 ft. x 8 ft.	4 ft. x 9 ft.*	4 ft. x 10 ft.
Pcs./Pallet	50	50	50
Pcs./Sq.	3.2	2.8	2.5

STUCCO

Navajo Beige

Thickness	5/16 in.		
Size	4 ft. x 8 ft.	4 ft. x 9 ft.*	4 ft. x 10 ft.
Pcs./Pallet	50	50	50
Pcs./Sq.	3.2	2.8	2.5

SIERRA 8

Not available with ColorPlus Technology

Thickness	5/16 in.		
Size	4 ft. x 8 ft.	4 ft. x 9 ft.*	4 ft. x 10 ft.
Pcs./Pallet	50	50	50
Pcs./Sq.	3.2	2.8	2.5

*4 ft. x 9 ft. HardiePanel vertical siding only available primed.

Products are available primed or with ColorPlus Technology finishes. For more details, visit **jameshardiepros.com**

HardieShingle®

Restore the look of a grand Cape Cod or add distinction to a handsome bungalow. HardieShingle® siding embodies the enchanting look of cedar shingles with lower maintenance.

Better than the real thing, HardieShingle siding resists rotting, curling, warping and splitting.

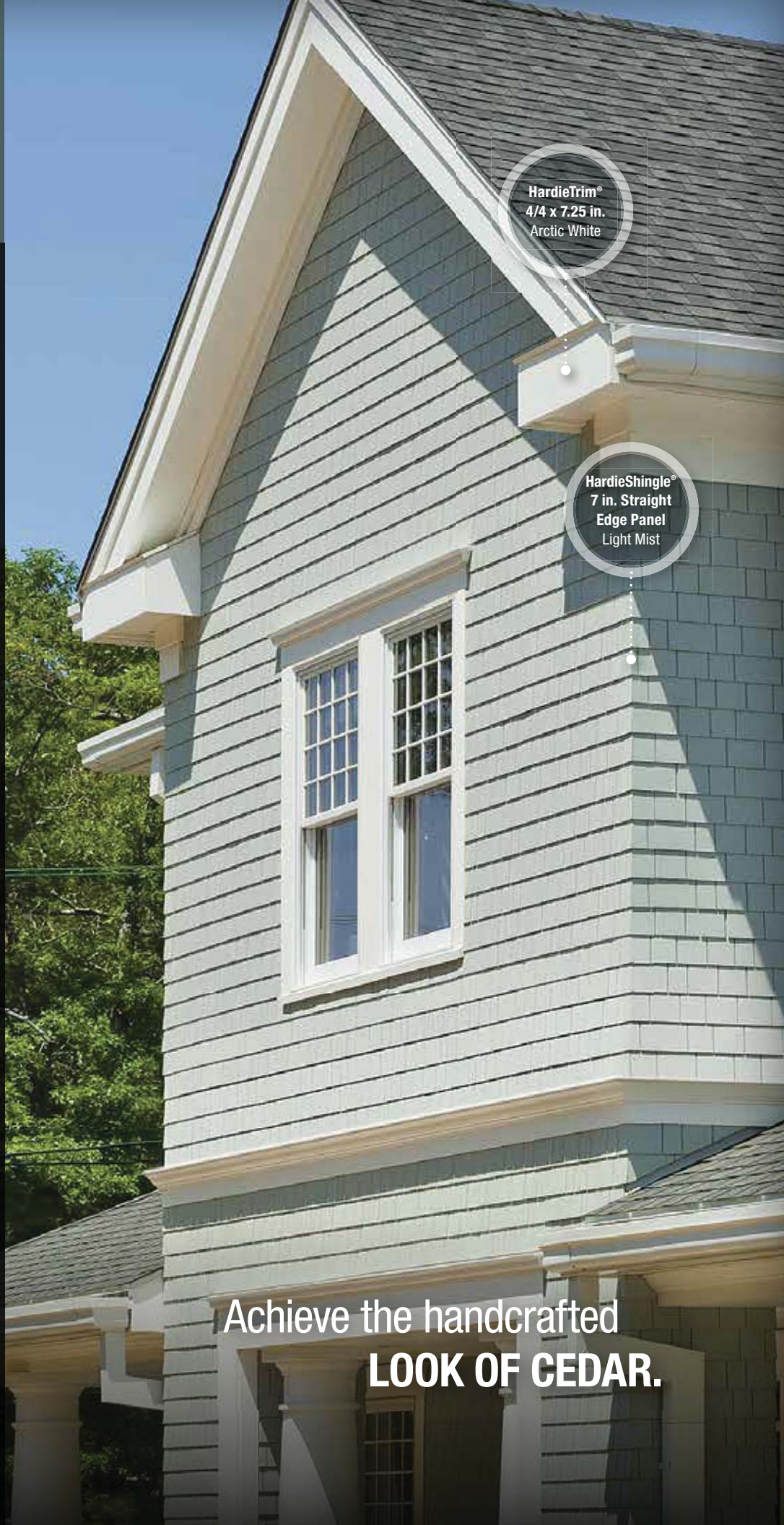

Achieve the handcrafted **LOOK OF CEDAR.**

STAGGERED EDGE PANEL

Sandstone Beige

Thickness	1/4 in.
Length	48 in.
Height	15.25 in.
Exp.	6 in.
Pcs./Pallet	100
Sq./Pallet	2
Pcs./Sq.	50

STRAIGHT EDGE PANEL

Iron Gray

Thickness	1/4 in.
Length	48 in.
Height	15.25 in.
Exp.	7 in.
Pcs./Pallet	86
Sq./Pallet	2
Pcs./Sq.	43

INDIVIDUAL SHINGLES

Monterey Taupe

Thickness	1/4 in.				
Length	4.2 in.	5.5 in.	6.75 in.	7.25 in.	10 in.
Height	15.25 in.				
Exp.	7 in.				
Pcs./Pallet	630				
Sq./Pallet	2				
Pcs./Sq.	315				

HALF ROUNDS

Not available with ColorPlus Technology

Thickness	1/4 in.
Length	48 in.
Height	15.25 in.
Exp.	7 in.
Pcs./Pallet	86
Sq./Pallet	2
Pcs./Sq.	43

Products are available primed or with ColorPlus Technology finishes. For more details, visit **jameshardiepros.com**

HardieTrim®

Form meets function at every angle with HardieTrim® boards. With an authentic look, HardieTrim boards provide design flexibility for columns, friezes, doors, windows and other accent areas.

Better than wood, it complements your long-lasting, lower maintenance James Hardie siding – adding punctuation to your design statement.

The performance you require
THE DISTINCTIVENESS YOU DESIRE.

HARDIETRIM® BOARDS

4/4 RUSTIC GRAIN©
Autumn Tan

4/4 SMOOTH
Autumn Tan

Thickness	.75 in.					
Length	12 ft. boards					
Width	1.65 in.*	3.5 in.	5.5 in.	7.25 in.	9.25 in.	11.25 in.
Pcs./Pallet	405	322	184	138	115	92

5/4 RUSTIC GRAIN©
Autumn Tan

5/4 SMOOTH
Autumn Tan

Thickness	1 in.				
Length	12 ft. boards				
Width	3.5 in.	5.5 in.	7.25 in.	9.25 in.	11.25 in.
Pcs./Pallet	238	136	102	85	68

CROWN MOULDING
Arctic White

Thickness	.75 in.	
Length	12 ft. boards	
Width	3.25 in.	5.25 in.
Pcs./Pallet	50	48

HARDIETRIM® BATTEN BOARDS

RUSTIC GRAIN©
Autumn Tan

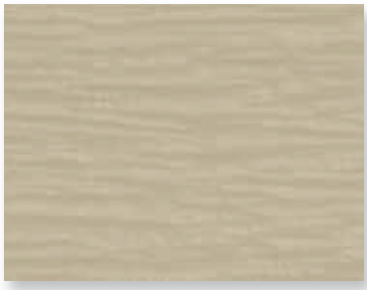

SMOOTH
Autumn Tan

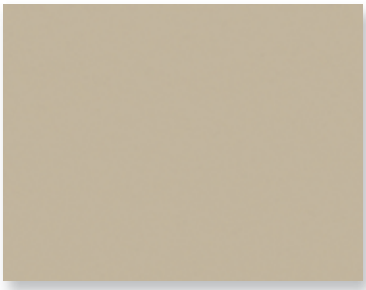

Thickness	.75 in.
Length	12 ft. boards
Width	2.5 in.
Pcs./Pallet	437

*1.65 in. boards only available primed

Products are available primed or with ColorPlus Technology finishes. For more details on availability of sizes, textures and additional HardieTrim Moulding profiles in your area, visit **jameshardiepros.com**

HardieSoffit®

A home is only as strong as its weakest point. HardieSoffit® panels reinforce your work by protecting the vulnerable gap between eaves and exterior walls.

Available in vented, non-vented and a range of pre-cut sizes, these panels complete your design and protect it from moisture and pests.

VENTILATION BENEFITS

Using vented soffit improves ventilation in the attic space and reduces the chance of water vapor condensation that can lead to issues such as mold and mildew growth, stained ceilings and damage to the framing of the house.

In warm climates, HardieSoffit panels allow hot, humid air to escape, which not only helps prevent condensation in the attic, but can also help reduce air conditioning costs.

In cool climates, HardieSoffit panels help prevent condensation from forming on the interior side of the roof sheathing and reduce the chances of roof-damaging ice dams.

For complete confidence
EVERY DETAIL MATTERS.

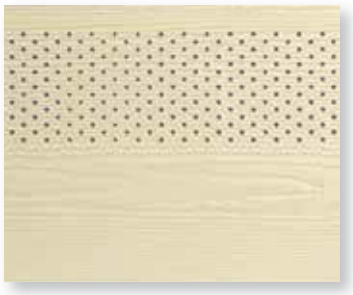

VENTED SMOOTH & CEDARMILL©

Sail Cloth

Thickness	1/4 in.		
Length	12 ft.	12 ft.	8 ft.
Width	12 in.	16 in.	24 in.
ColorPlus Pcs./Pallet	216	156	108
Prime Pcs./Pallet	200	150	100

NON-VENTED SMOOTH & CEDARMILL©

Sail Cloth

Thickness	1/4 in.			
Length	12 ft.	12 ft.	8 ft.	8 ft.*
Width	12 in.	16 in.	24 in.	48 in.
ColorPlus Pcs./Pallet	216	156	108	
Prime Pcs./Pallet	200	150	100	50

BEADED PORCH PANEL**

Arctic White

Thickness	1/4 in.
Length	8 ft.
Width	48 in.
Pcs./Pallet	50

Using the proper amount of vented HardieSoffit panels is crucial to a building's ventilation performance. James Hardie has taken the guess work out of soffit ventilation by providing the table below illustrating the minimum amount of vented HardieSoffit panels recommended for your attic space.***

ATTIC SQ. FT.	LINEAR FT. OF VENTED SOFFIT
200	10
300	14
400	19
500	24
600	29
700	34
800	38
900	43
1000	48
1100	53
1200	58
1300	62
1400	67
1500	72
1600	77
1700	82
1800	86
1900	91
2000	96
2100	101
2200	106
2300	110
2400	115
2500	120
2600	125
2700	130
2800	134
2900	139
3000	144
3100	149

*These 48 in. x 8 ft. panels only available primed.
**Beaded Porch Panel is available in all 11 standard soffit colors, as well as Cool Breeze.
***Linear Feet of Vented Soffit calculation is based on 2012 International Residential Code (IRC) Section 806.2, Exception 2, with a 50% upper attic and 50% lower attic split of required ventilation, using soffit with a net free ventilation of 5 square inches per linear foot. This Exception is also approved in 2015 IRC Section 806.2. Always consult a building design professional to confirm attic ventilation meets local building code requirements.

Products are available primed or with ColorPlus Technology finishes. For more details, visit **jameshardiepros.com**

Cast your homes in
THE MOST ROMANTIC LIGHT.

SUBTLE BLENDS

Color Inspiration

COOL TONES

COMPLEMENTARY

WARM TONES

Use deeper body colors for a warm, welcoming feeling. Make homes appear larger with soft contrasts between siding and trim. The right color combinations leave lasting impressions. Our color specialists designed the rich ColorPlus finish collection to help you express what's special about every home you build.

Express the true nature of a home's character with **ColorPlus® Technology**

PLANK, PANEL, BATTEN AND SHINGLE COLORS

ARCTIC WHITE

COBBLE STONE

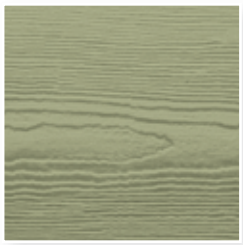
HEATHERED MOSS

PEARL GRAY

LIGHT MIST

SAIL CLOTH

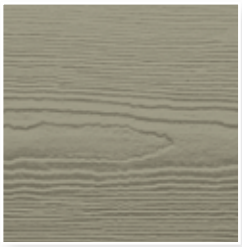
MONTEREY TAUPE

MOUNTAIN SAGE

GRAY SLATE

BOOTHBAY BLUE

WOODLAND CREAM

AUTUMN TAN

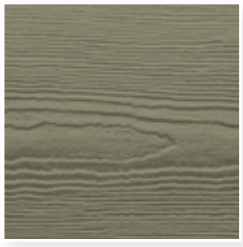
WOODSTOCK BROWN

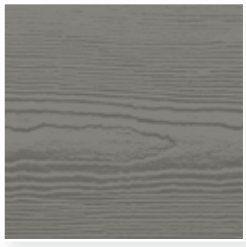
AGED PEWTER

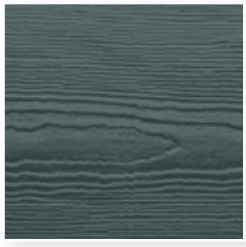
EVENING BLUE

NAVAJO BEIGE

KHAKI BROWN

TIMBER BARK

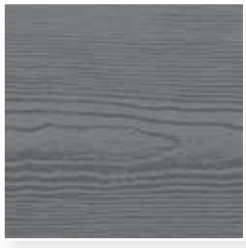
NIGHT GRAY

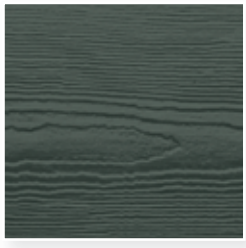
IRON GRAY

SANDSTONE BEIGE

CHESTNUT BROWN

COUNTRYLANE RED

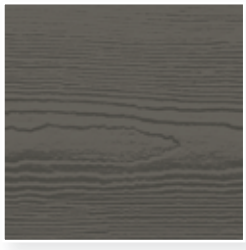
RICH ESPRESSO

Selecting a color? Request a product sample at **jameshardiepros.com/samples**

Colors shown are as accurate as printing methods will permit. Please see actual product sample for true color.

Color Selection

TRIM AND SOFFIT COLORS

ARCTIC WHITE

SANDSTONE BEIGE

MONTEREY TAUPE

SAIL CLOTH

AUTUMN TAN

WOODSTOCK BROWN

NAVAJO BEIGE

KHAKI BROWN

TIMBER BARK

COBBLE STONE

PEARL GRAY

PLANK COASTAL COLORS*

CORAL COAST

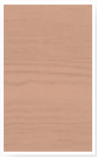
TERRA COTTA

PINK SAND

COOL BREEZE

AQUA MARINE

*Coastal colors are available exclusively in HardiePlank lap siding, Smooth and Select Cedarmill in 8.25 in. and 6.25 in. widths only.

Explore our color palettes and differentiate your homes with stunning curb appeal. These distinctive tones are drawn from natural environments, complementing your design with the look of America's idyllic neighborhoods.

HardieWrap®

No exterior cladding can prevent 100% of water intrusion. Your homes should have an additional line of defense. HardieWrap® weather barrier provides a superior balance of water resistance and breathability, keeping the area within the wall drier. This helps prevent moisture accumulation that may lead to mold and mildew growth.

INSTALLATION ADVANTAGES

- Thicker, more durable material for easier, quicker installation
- Superior tear resistance helps prevent water infiltration
- Can be installed with staples in place of cap nails for cost savings
- Provides a higher level of performance, no matter what type of cladding you specify

WEATHER BARRIER

Thickness	11 mil.			
Length	100 ft.	100 ft.	150 ft.	150 ft.
Width	3 ft.	9 ft.	9 ft.	10 ft.

FLEX FLASHING

Thickness	60 mil.	
Length	75 ft.	75 ft.
Width	6 in.	9 in.

PRO-FLASHING

Thickness	20 mil.		
Length	75 ft.	75 ft.	75 ft.
Width	4 in.	6 in.	9 in.

SEAM TAPE

Thickness	3.2 mil.
Length	164 ft.
Width	1-7/8 in.

To learn more about our weather barrier's advantages, visit **jameshardiepros.com**

Finishing Touches

ColorPlus Technology Accessories

TOUCH-UP KITS

Specially formulated to match ColorPlus Technology finishes, our Touch-up Kits offer resistance to aging, color change and chalking. Included in the kits, Touch-up Pens conceal nailheads and very small nicks and scratches.

COLOR-MATCHED CAULK

OSI® QUAD® MAX sealant offers a high performance sealant solution to color match James Hardie ColorPlus products.

Trim Accessories

FLAT TABS

Reduce nail holes and improve the aesthetic of trim applications around windows, doors and band boards.

CORNER TABS

Use corner tabs to reduce the appearance of nail holes that would detract from the finished look of corner trim installations.

Find useful job-site tips in our industry-leading Best Practices Guide.
For the latest installation instructions, visit **jameshardiepros.com**

As unforgettable
AS IT IS UNCOMPROMISING.

See the James Hardie Difference

JAMES HARDIE • PROTECT & BEAUTIFY •
8 MILLION HOMES AND COUNTING

James Hardie invented fiber cement. Over 8 million homes* later, we continue to set the standard in premium, high-performance exterior cladding. Our products deliver uncompromising durability and finish quality for a beautiful, lower maintenance exterior.

Our unrivaled investment in R&D and constant innovations in product design, manufacturing and distribution allow us to remain steps ahead of the competition. With the support of our employees, partners and exceptional warranties, we're committed to protecting your customers' homes while helping your business grow.

*Estimate based on total James Hardie siding sales through 2016 and average housing unit size.

Warranty

Protect your homes with North America's #1 brand of siding backed by exceptional warranties. Unlike other brands, James Hardie doesn't prorate our siding and trim warranty coverage. We stand behind our siding 100% for 30 years and trim for 15 years.

ColorPlus Technology finishes come with a 15-year limited warranty.

James Hardie Non-Prorated Siding Substrate Warranty Coverage

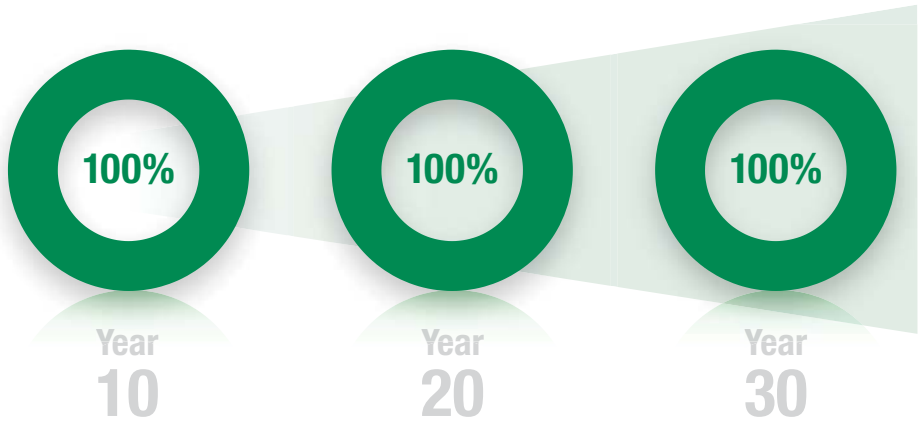

Endorsements – a reputation built on trust

For decades, our fiber cement products have been used to create better places to live. Each new home stands as a testament to our uncompromising quality. That proven track record has earned the loyalty of millions of homeowners and the endorsements of trusted authorities across the building industry.*

Featured on the **DIY Network's Blog Cabin** since 2012

Chosen by builders as a **Brand Leader** in **Builder Magazine** since 2009

HardiePlank lap siding is backed by the **Good Housekeeping Seal**

*Endorsements accurate as of 2017.

Make every home

AN EXPRESSION OF YOUR CHARACTER.

1.888.542.7343 | **jameshardiepros.com**

© 2018 James Hardie Building Products Inc. All Rights Reserved. TM, SM, and ® denote trademarks or registered trademarks of James Hardie Technology Limited. **HS1889 04/18**

JamesHardie

Siding | Trim

Fiberglass-Based Asphalt Shingles & Accessories

Guide Specifications

[illegible]

[illegible] ACCE[illegible]R[illegible]E[illegible]

[illegible]

[illegible]

A. [illegible]

[illegible]

A. [illegible]

C. [illegible]

D. [illegible]

E. [illegible]

[illegible]

A. A[illegible] S[illegible] C[illegible] E[illegible] (ACSE)
1. ASCE [illegible] – M[illegible] D[illegible] [illegible] S[illegible]

[illegible] (ARMA)

Fiberglass-Based Asphalt Shingles & Accessories

Guide Specifications

C□ AS□M □□□□r□□□□□□□□□AS□M□□□

□□ AS□M A□□□□A□□□M □S□□□d□rd S□□□□□□□□□□□□ □r S□□□□S□□□□□□□□□ C□□□□d □□ □□□□□□□□d□r □□□□□ r□□□ A□□□□□C□□□□d □□ □□□□□□□□□□□d□□□ □□□□ □ □□□D□□ □r□□□□□□□

□□ AS□M □□□□□ □S□□□d□rd S□□□□□□□□□□□□ □r A□□□ □□□□□ □□d A□□□ □□□□□ A□□□ S□□□□□□□d □□□□□□□

□□ AS□M □□□□□ – S□□□d□rd S□□□□□□□□□□□□ □r C□□□□r S□□□□□□□d S□r□□ □r □□d□□□ C□□□r□□□□□□

□□ AS□M D□□□ □S□□□d□rd S□□□□□□□□□□□□ □r A□□□□□□S□□□r□□□d □r□□□□□ □□□□□ □□d □□ R□□□□□□ □□d □ □□□r□r□□□□□□

□□ AS□M D□□□ □S□□□d□rd □□□□M□□□□d □r S□□ □□□□□□□□□□□□□□d A□□□□□□ □□A□□□□□R□□□ R□□□□□□□C□□ S□□□□□□□□□d S□□□□□□ □ □□d □□ R□□□□□ □□d □ □□□r□r□□□□□□

□□ AS□M D□□□□ – S□□□d□rd □□r□ □□□□□□□ R□□□□□□ □□ R□□□□□ □□d □ □□□r□r□□□□□□

□□ AS□M D□□□□ □S□□□d□rd S□□□□□□□□□□□□ □r S□□□Ad□r□□ □ □□□ □r M□d□□□d □□□□ □□□□ S□□□□ M□□□r□□□ □ □□d □□ S□□□ R□□□□□ □ □d□r□□□□ □□□□□r □□□ D□□ □r□□□□□□□□

□□ AS□M D□□□□ □S□□□d□rd S□□□□□□□□□□□□ □r C□□□□ A A□□□□□□S□□□□□□ S□r□□□d □ □□□ M□□□r□□ □r□□□□□□□

□□ AS□M D□□□□ □S□□□d□rd □□□□M□□□□d □r □ □d R□□□□□□□□ □□A□□□□□S□□□□□□ □□□□□□d□□d M□□□□d□□

□□□ AS□M D□□□□ □S□□□d□rd S□□□□□□□□□□□□ □r A□□□□□S□□□□□□ M□d□ □r□□ □ □□□□ □□□□□d S□r□□□d □ □□□ M□□□r□□□r□□□□□

□□□ AS□M D□□□□ □S□□□d□rd S□□□□□□□□□□□□ □r A□□□□□R□□□C□□ □□□A□□□□□□□□r□□□

□□□ AS□M D□□□□ □S□□□d□rd S□□□□□□□□□□□□ □r A□□□□□S□□r□□d □r□□□□ □□□□ □□d r□□□ □□□□ □□d S□□□ S□□□ R□□□□□□

□□□ AS□M D□□□□ □S□□□d□rd □□□□M□□□□d □r M□□□r□□ □□□□□A□□□□S□□□□□ M□□□□□□□□□□ □□□□ R□□□□□□□□□

□□□ AS□M D□□□□ □S□□□d□rd S□□□□□□□□□□□□ □r □ □d r□□□ □□□□□□C□□□□□□□□ □□r□□□ □□□r□ □ □d S□□□ S□□□ R□□□□□□

□□□ AS□M D□□□□ □S□□□d□rd □□□□M□□□□d □r □ □d R□□□□□□□□ □□S□□□d A□□□□□S□□□□□ □□ □□□□ □r□□□ □□□R□□□□□□□ M□□□□d□□

□□□ AS□M E□□□ □S□□□d□rd □□□□M□□□□d □ □r □r□ □□□□□ □□R□□□C□□r□□□□

□□□ AS□M □□□□□ □S□□□d□rd S□□□□□□□□□□□□ □r Dr□□□ □□□□□□r□□□ □□□□ S□□□□□□□d S□□□□□□

□□□ AS□M D□□□□ – S□□□d□rd S□□□□□□□□□□□□ □r S□r□□□ □ □□□d□□□□ S□r□□□ □S□S□M□d□□□d □□□□ □□□□ S□□□□ M□□r□□□ □ □□□□ □ □□□□ □□□r R□□□r□□□ □□□□

□□□ AS□M D□□□□ – S□□□d□rd S□□□□□□□□□□□□ □r S□r□□□ □ □□□d□□□□ S□r□□□ □S□S□M□d□□□d □□□□ □□□□ S□□□□ M□□r□□□ □ □□□□ □ □□□□□□r R□□□r□□□ □□□□

D□ C□□□R□□□R□□□□ C□□□□□□□CRRC□□ □r□d□□□R□□□□ □r□□r□□ □

E□ C□□□d□□ S□□□d□rd A□□□□□□□□ □CSA□ CSA A□□□□□ □A□□□□□S□□□□□□ M□d□ r□□ □ □□□□ □□□□d S□r□□□d □ □□ M□□r□□□r□□□□□□ □ □□□A□□□□□□□ □□□□ □□ r□d□□□ □□d □r □□□ □□ C□□□d□□

□□ C□□□r□□□ □□□d□□ S□□□d□rd C□□ □ □□□□□□ □C□SC□

□□ C□□□r□□□ □□□d□□ C□d□□C□□□r□□ C□d□ □R□□□□□□□□□ □□□□ □□□

□□ □M A□r□□□□

□□ □M □□□□ □A□ □r□□□ □ □□□□□□S□□□d□rd □r E□□□□□□□□ □□□ S□ □□□d □ □d □ □□□R□□□□□□ □□ R□□□A□□□ □□□□ □ □□□ S□□□□ □ □□□□□□ □d□r □ □□□□□□ D□□r□□□□□r□□□r

□□ □r□d□ □□d□□ C□□ □ □□□□□ □□C

□□ □r□d□ □□d□□ C□d□□

□□ □r□d□ □r□d□□A□r□□□□

□□ E□□r□□□ □□□□□r□□□□□ A□□□□□ □E□A□ E□ER□ □ S□AR R□□□ S□□□□ □

□□ □□r□□□□□□□C□d□ C□□□□□□□CC□

□□ □□r□□□□□□R□d□□□□C□d□ □RC□

Fiberglass-Based Asphalt Shingles & Accessories

Guide Specifications

□□ □□□□r□□□□□□□□□□□d□□□ C□d□ □□□C□□

□□ □□□□r□□□□□□□C□d□ C□□□□□□E□□□□□□□□ S□r□□□□ □CC□ES□
□□ □CC□ES E□□□□□□□□ R□□□r□□□
□□ □CC□ES A□□□□□□□□□□ Cr□□□r□□□

□□ M□□□ □D□d□ C□□□□□ D□□□r□ □□□□□R□□□□□□r□ □□d E□□□□□ □R□□□r□□□ □RER□□r□d□□□C□□r□□
S□□□□□□M□□□ □D□d□ C□□□□□ □ □□□□ □□A□□□□□□□□□ □□ □A□□

M□ □ □□□□□□R□□□□□ C□□r□□□r□A□□□□□□□□ □□RCA□□

□□ S□□□□M□□□□□d A□r C□d□□□□□□ C□□r□□□r□ □ □□□□□A□□□□□□□□□□□□SMAC□A□– Ar□□□□□□r□□
S□□□□M□□□M□□□□□

□□ □□□□D□□□r□ □□□□□□□□r□□□ □□D□□ □r□d□□□□□□□

□□ □d□r□r□□r□ □□□r□□r□□ □□ □□□
□□ □□ □□ S□□d□rd □□□M□□□d□ □r □□ □□□R□□C□□r□□□
□□ □□ □□– □ □d R□□□□□□□ □□r□□□d R□□C□□r□□ M□□r□□□
□□ □□ □□□ □□ R□□□□□□□ □□r□□□d R□□C□□r□□ M□□r□□□
□□ □□ □□□ □□M□□d □r □ □d R□□□□□□A□□□S□□□□□ □□ S□□d □□□
□□ □□ □□– □ □□□□□□□ □r R□□C□□r□□ S□□□□ □

□□ □d□r□r□□r□ □□□r□□r□□ E□□□□□□ S□r□□□□ □□ □ES□□
□□ □□ES E□□□□□□□ R□□□r□□□

R□ □S □r□□□ □□d□□ C□□□□□□ S□ □C□□□d□r□□□ □□ E□r□□ □d E□r□□□ □□□D□□□ □EED□

□□□ **RE□ □LA□R□ RE□ □REME□ □□ A□D CER□□CA□ □ □**

A□ □r□□d□ □r□□□□ □□□□□ □□□ □□d□r□r□□r□ □□□r□□r□□ □□ □C□□A □r□ r□□□□□□□□
□□□□□□□□□□

□□ □ □□□ □□□□□□□□ □r□□d□ □r□□□□ □□□□ □□□□□□□□ □□ □□□□□□ □□□□□ □r EED □r□□□□□□□
□□ S□□□□□□□□ S□□ r□d□– □□□□□□□d R□d□□□□□
□□ M□□r□□ □d R□□□r□□ r□d□– □□d□□ r□d□□D□□□□□r□ □d □ □□ □□□□□ □E□r□□ □□□□
□r□d□□D□□r□□□ □□ □□□□□r r□□□ E□r□□ □□□□r□d□□D□□r□□□
□□ M□□r□□ □d R□□□r□□ r□d□– □□d□□ r□d□□D□□□□□r□ □d □ □□ □□□□□ – S□r□□ □□
R□□ M□□r□□□
□□ M□□r□□ □d R□□□r□□ r□d□– C□□r□□□ □d D□□ □□ □ □□ M□□□□□ □□□

C□ □ □□□ □□□□□□□□ □r□□d□ □r□□□□ □□□□ □□□□□□□ E□ER□ □ S□AR □r□□□□□□□

D□ □□□□□□□□r□□□□ □r□d□□ □□ □□□rd□□ □ □□ □□□d□r□□□□□ □d □□□□□□d□□ □d□

E□ A□□ □r□ □□□□□□ □r□□r□ □d □□ □ □ □□□r □□□□□□□□□□ □□ □rr□□□ S□A □d□□□□□

□□□ □E □□ S□EC□□ER□D□□□ □□r□□□d□
□□□ **R□D□C□ A□R□ □E□**

A□ □ □□□ □□□□□□□□□□r□d□ □□r□□□□□□□□d □□□□□□□□□□□□ □ □□ □□r□□ □® □□□□□□□□□□ □ □□□□
□□r□ r□□□r□□□□ □r□ **the nailing zone on the shingle's top surface.**

Fiberglass-Based Asphalt Shingles & Accessories

Guide Specifications

PART 1 – GENERAL

1.1 Section Includes

A. Supply and install roofing shingles and accessories as shown on the drawings and as specified herein.

1.2 Related Sections

Section numbers and titles are for reference only. Coordinate with other sections of the Contract Documents to determine applicable requirements for this section.

1.3 Quality Assurance

A. Comply with applicable requirements of the following standards:

1. ASTM D3462
2. ASTM D7158/D7158M – Standard Specification for Class H (120 mph) Wind Resistance
3. ASTM E108 Class A Fire Resistance

1.4 Reference Standards

A. Unless otherwise indicated, comply with the following standards:

1. Roofing Industry Committee on Weather Resistance (RICOWR) Publication #1 – Standard Practice for Preventing Water Intrusion in Roofing Systems
2. Asphalt Roofing Manufacturers Association (ARMA) Publication – Quality Control Guidelines for the Manufacture of Steep Slope Roofing Products

1.5 Submittals

1. Shingle Samples: Submit samples of each color and type of shingle specified.
2. Manufacturer's Instructions: Submit manufacturer's installation instructions and data sheets for each product specified.

PART 2 – PRODUCTS

2.1 Manufacturers

A. Subject to compliance with requirements, provide products by Owens Corning or approved equal.

2.2 Shingles

A. Laminated Fiberglass-Based Asphalt Shingles: Owens Corning TruDefinition® Duration® Shingles – Standard Specification for Class H (120 mph) Wind Resistance and Standard Specification for Class A Fire Resistance.

2.3 Accessories

A. Starter Strip: Manufacturer's standard self-adhering starter strip.
B. Hip and Ridge Shingles: Manufacturer's standard hip and ridge shingles.
C. Underlayment: Manufacturer's standard synthetic underlayment.
D. Ice and Water Protection: Manufacturer's standard self-adhering ice and water protection membrane.
E. Drip Edge: Manufacturer's standard metal drip edge profile, [color].

2.4 Fasteners

1. Corrosion-resistant roofing nails of sufficient length to penetrate roof sheathing.

PART 3 – EXECUTION

3.1 Examination

A. Verify that roof deck is dry, smooth, and free of debris before installation.

3.2 Installation

A. Install shingles in accordance with manufacturer's instructions and applicable code requirements.
B. Install starter strip along eaves and rakes.
C. Install underlayment and ice and water protection as required.
D. Install shingles with [number] nails per shingle, placed in the nailing zone.
E. Install hip and ridge shingles with [exposure].
F. Install drip edge at eaves and rakes.

3.3 Cleaning

A. Remove debris and excess materials from the roof and surrounding areas upon completion of work.

Fiberglass-Based Asphalt Shingles & Accessories

Guide Specifications

PART 1 GENERAL

1.1 A. Manufacturer's current published instructions and recommendations for installation of roofing system must be followed. Failure to install roofing system in accordance with manufacturer's instructions and recommendations may void manufacturer's warranty.

B. Manufacturer's warranties do not cover damage caused by improper installation, improper ventilation, inadequate decking, or failure to follow manufacturer's instructions. Owens Corning Roofing and Asphalt, LLC does not warrant roofing system installed over existing roofing system.

PART 2 SELECTION OF MATERIALS

2.1 A. Shingles: Provide Owens Corning Roofing and Asphalt, LLC shingles as specified and indicated.

B. Shingles: Provide Owens Corning Roofing and Asphalt, LLC shingles as specified and indicated.

PART 3 DELIVERY, STORAGE AND HANDLING

3.1 A. Deliver materials to site in manufacturer's unopened bundles with labels intact and legible.

B. Store materials protected from exposure to harmful weather conditions and at temperature and humidity conditions recommended by manufacturer.

C. Store materials protected from exposure to harmful weather conditions, at temperatures between 40°F and 80°F (4°C and 27°C).

D. Do not install damaged shingles; return damaged bundles to supplier.

E. Store and dispose of solvent-based materials in accordance with requirements of local authorities having jurisdiction.

F. Clean spills of asphalt coating from exposed surfaces.

PART 4 PROJECT CONDITIONS

4.1 A. Do not apply roofing system when temperature is below 40°F (4°C) unless special procedures are followed. Refer to Owens Corning Roofing and Asphalt, LLC cold weather application instructions.

PART 5 WARRANTY

5.1 A. Submit written warranty executed by Owens Corning Roofing and Asphalt, LLC, agreeing to repair or replace roofing system that fails in materials or workmanship within specified warranty period. Failures include, but are not limited to, manufacturing defects and wind damage resulting in blow-off of shingles. Roofing system includes shingles, underlayment, flashing, and other components of roofing system manufactured or supplied by Owens Corning Roofing and Asphalt, LLC. Refer to actual warranty for complete terms and conditions.

B. Manufacturer's Extended Limited Warranty: Submit written warranty executed by Owens Corning Roofing and Asphalt, LLC, agreeing to repair or replace roofing system that fails in materials or workmanship within specified warranty period. Failures include, but are not limited to, manufacturing defects and wind damage resulting in blow-off of shingles. Roofing system includes shingles, underlayment, flashing, and other components of roofing system manufactured or supplied by Owens Corning Roofing and Asphalt, LLC. Refer to actual warranty for complete terms and conditions.

PART 6 SELECTION OF MATERIALS

6.1 A. Owens Corning Starter: Provide Owens Corning Roofing and Asphalt, LLC starter shingles as specified and indicated or recommended by Owens Corning Roofing and Asphalt, LLC for use with roofing system specified and indicated.

B. Owens Corning Ridge Cap: Provide Owens Corning Roofing and Asphalt, LLC ridge cap shingles as specified and indicated or recommended by Owens Corning Roofing and Asphalt, LLC for use with roofing system specified and indicated.

Fiberglass-Based Asphalt Shingles & Accessories

Guide Specifications

[illegible]

PART [illegible] PRODUCTS

[illegible] MANUFACTURER[illegible]

A. [illegible]

B. [illegible]

[illegible] AVAILABLE [illegible]

[illegible]

A. [illegible]
1. [illegible] the nailing zone on the shingle's top surface.
2. [illegible]
3. [illegible]
4. [illegible]
5. [illegible]
6. [illegible]
7. Color: As selected from manufacturer's full range.
8. [illegible]

B. [illegible]
1. [illegible] the nailing zone on the shingle's top surface.
2. [illegible]
3. [illegible]
4. [illegible]
5. [illegible]
6. [illegible]
7. Color: As selected from manufacturer's full range.
8. [illegible]

C. [illegible]
1. [illegible] the nailing zone on the shingle's top surface.
2. [illegible]
3. [illegible]
4. [illegible]

Fiberglass-Based Asphalt Shingles & Accessories

Guide Specifications

□□ □□□d□□□ □□r S□□□r□□ □ □□□d□□□ □□□□ □□□□□□□□
□□ C□□□r□□□ □□r S□□□r□□ □□□□ □□ □□□□□□ □□ □ □□
□□ Color: As selected from manufacturer's full range.
□□ S□□d□rd□□□ □□□□□□□□□□□□AS□M D□□□□AS□M D□□□□ □□□□ □□□AS□M D□□□□ □C□□□ □ □ □d R□□□□□□□□□□AS□M D□□□□AS□M D□□□□ □C□□□ □ □ □d R□□□□□□□□□□AS□M E□□□□□ □ □□□ □C□□□ A □□r□ R□□□□□□□□□□ □□□□ □□□ E□ER□ □ S□AR□ r□□□r□□ □□□□ □r □□□□□□□□r r□□□□□□□□ □□□□□□ □□d □□□□r □□□d □□□r r□□□□□□□□ □□□□□□□□□□ C□□□r□□ □ □d□□ E□r□□ E□□□□□□□ S□□d□rd□□□ □□□□□ r□□ r□□□r□□ □□□□□□□□d □□ □□□ C□□□R□□□R□□□□ C□□□□□□CRRC□□ □□r□d□ □r□d□□□A□□r□□□□□CC□ES AC□□□□□□d □□ER□□□□□□□

D□ □r□D□□□□□□□□□□ D□r□□□□□ □A□□□□ R□□□□□□□□□S□□□□□□□□ A□ □ □□□□□□□□r□d □□□ □ □ □□□□ C□r□□□□ R□□□□□□ □□d A□□□□□□□□□C□

□□ □r□d□□□□**A□r**□□□□□□□□□□□□**d**□□□ □□**r**□□ □□□® □□□□□□□□□□□□□□□ □ □□□□□ □□□□**r**□□ **r**□□□□□**r**□□□□ □□**r**□□ □□ **the nailing zone on the shingle's top surface.**

□□ □ □□□ □□□□□S□□□□□ □□□□□□□□ □□ □□□□□ □ □ □□□□ □□□□□□□□ □□ □□□□□□□ □ □ □□
□□ E□□□□□□r□□ □□□□□□ □□ □□□□□ □ □ □□
□□ S□□□□□□□□ □□r S□□□r□□ □□□□
□□ □□□d□□□ □□r S□□□r□□ □ □□□d□□□ □□□□□□ □r □□□ □□□□□□□□□□
□□ C□□□r□□□ □□r S□□□r□□ □□□□ □□ □□□□□□□ □□□ □ □□
□□ Color: As selected from manufacturer's full range.
□□ S□□d□rd□□□ □□□□□□□□□□□□AS□M D□□□□AS□M D□□□□ □□□□ □□□AS□M D□□□□ □C□□□ □ □ □d R□□□□□□□□□□AS□M D□□□□AS□M D□□□□ □C□□□ □ □ □d R□□□□□□□□□□AS□M E□□□□□ □ □□□ □C□□□ A □□r□ R□□□□□□□□□□ CSA A□□□□□□□□□□r□d□ □r□d□□□A□□r□□□□□M□□□ □□D□d□ C□□□□□□ □r□d□□□ A□□r□□□□□CC□ES AC□□□□□□d □□ER□□□□□□□

E□ □r□D□□□□□□□□□□ D□r□□□□□ □□ □□ A□□□□□ R□□□□□□□□□S□□□□□□□□ A□ □ □□□□□□□□r□d □□□ □ □ □□□□ C□r□□□□ R□□□□□□ □□d A□□□□□□□□□C□

□□ □r□d□□□□**A□r**□□□□□□□□□□□□**d**□□□ □□**r**□□ □□□® □□□□□□□□□□□□□□□ □ □□□□□ □□□□**r**□□ **r**□□□□□**r**□□□□ □□**r**□□ □□ **the nailing zone on the shingle's top surface.**

□□ □ □□□ □□□□□S□□□□□ □□□□□□□□ □□ □□□□□ □ □ □□□□ □□□□□□□□ □□ □□□□□□□ □ □ □□
□□ E□□□□□□r□□ □□□□□□ □□ □□□□□ □ □ □□
□□ S□□□□□□□□ □□r S□□□r□□ □□□□
□□ □□□d□□□ □□r S□□□r□□ □ □□□d□□□ □□□□□□ □r □□□ □□□□□□□□□□
□□ C□□□r□□□ □□r S□□□r□□ □□□□ □□ □□□□□□□ □□□ □ □□
□□ Color: As selected from manufacturer's full range.
□□ S□□d□rd□□□ □□□□□□□□□□□□AS□M D□□□□AS□M D□□□□ □□□□ □□□AS□M D□□□□ □C□□□ □ □ □d R□□□□□□□□□□AS□M D□□□□AS□M D□□□□ □C□□□ □ □ □d R□□□□□□□□□□AS□M E□□□□□ □ □□□ □C□□□ A □□r□ R□□□□□□□□□□ CSA A□□□□□□□□□□r□d□ □r□d□□□A□□r□□□□□M□□□ □□D□d□ C□□□□□□ □r□d□□□ A□□r□□□□□CC□ES AC□□□□□□d □□ER□□□□□□□

□□ □r□D□□□□□□□□□□ D□r□□□□□ C□□□□ A□□□□□ R□□□□□□□□□S□□□□□□□□ A□ □ □□□□□□□□r□d □□□ □ □ □□□□ C□r□□□□ R□□□□□□ □□d A□□□□□□□□□C□

□□ □r□d□□□□**A□r**□□□□□□□□□□□□**d**□□□ □□**r**□□ □□□® □□□□□□□□□□□□□□□ □ □□□□□ □□□□**r**□□ **r**□□□□□**r**□□□□ □□**r**□□ □□ **the nailing zone on the shingle's top surface.**

□□ □ □□□ □□□□□S□□□□□ □□□□□□□□ □□ □□□□□ □ □ □□□□ □□□□□□□□ □□ □□□□□□□ □ □ □□
□□ E□□□□□□r□□ □□□□□□ □□ □□□□□ □ □ □□
□□ S□□□□□□□□ □□r S□□□r□□ □□□□
□□ □□□d□□□ □□r S□□□r□□ □ □□□d□□□ □□□□□□ □r □□□ □□□□□□□□□□
□□ C□□□r□□□ □□r S□□□r□□ □□□□ □□ □□□□□□□ □□□ □ □□
□□ Color: As selected from manufacturer's full range.
□□ S□□d□rd□□□ □□□□□□□□□□□□AS□M D□□□□AS□M D□□□□ □□□□ □□□AS□M D□□□□ □C□□□ □ □ □d R□□□□□□□□□□AS□M D□□□□AS□M D□□□□ □C□□□ □ □ □d R□□□□□□□□□□AS□M E□□□□□ □ □□□ □C□□□ A □□r□ R□□□□□□□□□□ □□□ □□□ C□□□R□□□R□□□□ C□□□□□□CRRC□□ □□r□d□ □r□d□□□A□□r□□□□□M□□□ □□D□d□ C□□□□□□ □r□d□□□ A□□r□□□□□CC□ES AC□□□□□□d □□ER□□□□□□□

Fiberglass-Based Asphalt Shingles & Accessories

Guide Specifications

[illegible]

- [illegible] **the nailing zone on the shingle's top surface.**
- [illegible]
- [illegible]
- [illegible]
- [illegible]
- [illegible]
- Color: As selected from manufacturer's full range.
- [illegible]

[illegible]

- [illegible] **the nailing zone on the shingle's top surface.**
- [illegible]
- [illegible]
- [illegible]
- [illegible]
- [illegible]
- Color: As selected from manufacturer's full ra[illegible]
- [illegible]

[illegible]

- [illegible] **zone on the shingle's top surface.**
- [illegible]
- [illegible]
- [illegible]
- [illegible]
- [illegible]
- [illegible] selected from manufacturer's full range[illegible]
- [illegible]

[illegible]

- [illegible] **the nailing zone on the shingle's top surface.**
- [illegible]
- [illegible]
- [illegible]
- [illegible]
- [illegible]
- Color: As selected from manufacturer's full range.

Fiberglass-Based Asphalt Shingles & Accessories

Guide Specifications

[illegible] S[illegible]d[illegible]rd[illegible] [illegible]AS[illegible]M D[illegible]AS[illegible]M D[illegible] [illegible]AS[illegible]M D[illegible] [illegible]C[illegible] [illegible] [illegible]d R[illegible]AS[illegible]M D[illegible]AS[illegible]M D[illegible] [illegible]C[illegible] [illegible] [illegible]d R[illegible]AS[illegible]M E[illegible] [illegible] [illegible]C[illegible]A [illegible]r[illegible] R[illegible] [illegible] [illegible]C[illegible] [illegible] [illegible]R[illegible]CSA A[illegible]CC[illegible]ES AC[illegible] [illegible]d [illegible] ER[illegible]

[illegible] [illegible]r[illegible]D[illegible] [illegible] [illegible]rd[illegible] [illegible]A[illegible] R[illegible]S[illegible] A[illegible] [illegible]r[illegible]d [illegible] [illegible] [illegible]C[illegible]r[illegible] R[illegible] [illegible]d A[illegible]C[illegible]

[illegible] [illegible] [illegible]S[illegible] [illegible] [illegible] [illegible] [illegible] [illegible] [illegible] [illegible] [illegible] [illegible]

[illegible] E[illegible]r[illegible] [illegible] [illegible] [illegible] [illegible] [illegible]

[illegible] S[illegible] [illegible]r S[illegible]r[illegible]

[illegible] [illegible]d[illegible] [illegible]r S[illegible]r[illegible]

[illegible] C[illegible]r[illegible] [illegible]r S[illegible]r[illegible] [illegible] [illegible] [illegible] [illegible] [illegible]

[illegible] C[illegible]r[illegible]A[illegible] [illegible]d [illegible]r[illegible] [illegible] [illegible]r[illegible]r[illegible]

[illegible] S[illegible]d[illegible]rd[illegible] [illegible]AS[illegible]M D[illegible]AS[illegible]M D[illegible] [illegible]AS[illegible]M D[illegible] [illegible]C[illegible] [illegible] [illegible]d R[illegible]AS[illegible]M D[illegible]AS[illegible]M D[illegible] [illegible]C[illegible] [illegible] [illegible]d R[illegible]AS[illegible]M E[illegible] [illegible] [illegible]C[illegible]A [illegible]r[illegible] R[illegible]rd[illegible] [illegible]r[illegible]d[illegible]A[illegible]r[illegible]M[illegible] [illegible]D[illegible]d[illegible] C[illegible] [illegible]r[illegible]d[illegible]A[illegible]r[illegible]

[illegible] [illegible]r[illegible]D[illegible] [illegible] [illegible]r[illegible] [illegible]rd[illegible] [illegible]A[illegible] R[illegible]S[illegible] A[illegible] [illegible]r[illegible]d [illegible] [illegible] [illegible]C[illegible]r[illegible] R[illegible] [illegible]d A[illegible]C[illegible]

[illegible] [illegible] [illegible]S[illegible] [illegible] [illegible] [illegible] [illegible] [illegible] [illegible] [illegible] [illegible] [illegible]

[illegible] E[illegible]r[illegible] [illegible] [illegible] [illegible] [illegible] [illegible]

[illegible] S[illegible] [illegible]r S[illegible]r[illegible]

[illegible] [illegible]d[illegible] [illegible]r S[illegible]r[illegible]

[illegible] C[illegible]r[illegible] [illegible]r S[illegible]r[illegible] [illegible] [illegible] [illegible] [illegible] [illegible]

[illegible] C[illegible]r[illegible]A[illegible] [illegible]d [illegible]rom manufacturer's full range.

[illegible] S[illegible]d[illegible]rd[illegible] [illegible]AS[illegible]M D[illegible]AS[illegible]M D[illegible] [illegible]AS[illegible]M D[illegible] [illegible]C[illegible] [illegible] [illegible]d R[illegible]AS[illegible]M D[illegible]AS[illegible]M D[illegible] [illegible]C[illegible] [illegible] [illegible]d R[illegible]AS[illegible]M E[illegible] [illegible] [illegible]C[illegible]A [illegible]r[illegible] R[illegible] [illegible] [illegible]C[illegible] [illegible] [illegible]R[illegible]CC[illegible]ES AC[illegible]d [illegible] ER[illegible]

M[illegible] [illegible] [illegible]rd[illegible] [illegible] [illegible]A[illegible] R[illegible]S[illegible] A[illegible] [illegible]r[illegible]d [illegible] [illegible] [illegible]C[illegible]r[illegible] R[illegible] [illegible]d A[illegible] [illegible]C[illegible]

[illegible] [illegible] [illegible]S[illegible] [illegible] [illegible] [illegible] [illegible] [illegible] [illegible] [illegible] [illegible] [illegible]

[illegible] E[illegible]r[illegible] [illegible] [illegible] [illegible] [illegible] [illegible]

[illegible] S[illegible] [illegible]r S[illegible]r[illegible] [illegible]

[illegible] [illegible]d[illegible] [illegible]r S[illegible]r[illegible] [illegible] [illegible]d[illegible] [illegible] [illegible]r [illegible] [illegible]

[illegible] C[illegible]r[illegible] [illegible]r S[illegible]r[illegible] [illegible] [illegible] [illegible] [illegible] [illegible]

[illegible] Color: As selected from manufacturer's full range.

[illegible] S[illegible]d[illegible]rd[illegible] [illegible]AS[illegible]M D[illegible]AS[illegible]M D[illegible] [illegible]AS[illegible]M D[illegible] [illegible]C[illegible] [illegible] [illegible]d R[illegible]AS[illegible]M D[illegible]AS[illegible]M D[illegible] [illegible]C[illegible] [illegible] [illegible]d R[illegible]AS[illegible]M E[illegible] [illegible] [illegible]C[illegible]A [illegible]r[illegible] R[illegible]rd[illegible] [illegible]r[illegible]d[illegible]A[illegible]r[illegible]M[illegible] [illegible]D[illegible]d[illegible] C[illegible] [illegible]r[illegible]d[illegible]A[illegible]r[illegible] CSA A[illegible]CC[illegible]ES AC[illegible]d [illegible] ER[illegible]S[illegible] [illegible] [illegible] C[illegible]r [illegible] [illegible]E[illegible]ER[illegible] [illegible] S[illegible]AR r[illegible]r[illegible] [illegible] [illegible]r [illegible]r r[illegible] [illegible] [illegible]d [illegible]r [illegible]d [illegible]r r[illegible] [illegible]

[illegible] [illegible] [illegible]rd[illegible] [illegible]A[illegible] R[illegible]S[illegible] A[illegible] [illegible]r[illegible]d [illegible] [illegible] [illegible]C[illegible]r[illegible] R[illegible] [illegible]d A[illegible]C[illegible]

[illegible] [illegible] [illegible]S[illegible] [illegible] [illegible] [illegible] [illegible] [illegible] [illegible] [illegible] [illegible] [illegible]

[illegible] E[illegible]r[illegible] [illegible] [illegible] [illegible] [illegible] [illegible]

[illegible] S[illegible] [illegible]r S[illegible]r[illegible] [illegible]

[illegible] [illegible]d[illegible] [illegible]r S[illegible]r[illegible] [illegible] [illegible]d[illegible] [illegible] [illegible]r [illegible] [illegible]

[illegible] C[illegible]r[illegible] [illegible]r S[illegible]r[illegible] [illegible] [illegible] [illegible] [illegible] [illegible]

[illegible] Color: As selected from manufacturer's full range.

[illegible] S[illegible]d[illegible]rd[illegible] [illegible]AS[illegible]M D[illegible]AS[illegible]M D[illegible] [illegible]AS[illegible]M D[illegible] [illegible]C[illegible] [illegible] [illegible]d R[illegible]AS[illegible]M D[illegible]AS[illegible]M D[illegible] [illegible]C[illegible] [illegible] [illegible]d R[illegible]AS[illegible]M E[illegible] [illegible] [illegible]C[illegible]A [illegible]r[illegible] R[illegible]CSA A[illegible]CC[illegible]ES AC[illegible] ER[illegible]rd[illegible] [illegible]r[illegible]d[illegible] A[illegible]r[illegible]d M[illegible] [illegible]D[illegible]d[illegible] C[illegible] [illegible]r[illegible]d[illegible]A[illegible]r[illegible]S[illegible] [illegible] [illegible] C[illegible]r [illegible] [illegible]E[illegible]ER[illegible] [illegible]

Fiberglass-Based Asphalt Shingles & Accessories

Guide Specifications

[illegible]

[illegible]
- [illegible]
- [illegible]
- [illegible]
- [illegible]
- [illegible]
- Color: As selected from manufacturer's full range.
- [illegible]

[illegible]
- [illegible]
- [illegible]
- [illegible]
- [illegible]
- [illegible]
- Color: As selected from manufacturer's full range.
- [illegible]

[illegible]
- [illegible]
- [illegible]
- [illegible]
- [illegible]
- [illegible]
- Color: As selected from manufacturer's full range[illegible]
- [illegible]

[illegible]
- [illegible]
- [illegible]
- [illegible]
- [illegible]
- [illegible]
- Color: As selected from manufacturer's full range[illegible]
- [illegible]

Fiberglass-Based Asphalt Shingles & Accessories

Guide Specifications

S□ S□r□□ □□ A□□□□ R□□□□□□□□□S□□□□□□□□ A□ □ □□□□□□□□r□d □□ □ □ □□□□ C□r□□□□ R□□□□□□ □□d A□□□□□□□□□C□
□□ □□□ □□□□S□□□□ □□□ □□ □□□□□ □ □ □□□□ □□□ □□ □□□□□ □ □ □□
□□ E□□□□□r□□ □ □□ □□□□□ □ □ □□
□□ S□□□□□□□ □□r S□□□r□□ □□□□
□□ □□□d□□□ □□r S□□□r□□ □ □□□d□□□ □□□□□□□□□□□□ □□□□□□□□□
□□ C□□□r□□□□ □□r S□□□r□□ □□□□□□ □□□ □□□□□□ □□□ □ □□
□□ Color: As selected from manufacturer's full range.
□□ S□□□d□rd□□□ □□□□□□□□□□□□□□AS□M D□□□□AS□M D□□□□ □□□□□ □□□AS□M D□□□□ □C□□□□ □ □ □d R□□□□□□□□□□□AS□M D□□□□AS□M D□□□□ □C□□□□ □ □ □d R□□□□□□□□□□AS□M E□□□□□ □ □□□ □C□□□A □□r□ R□□□□□□□□□□CCRES AC□□□□□ □ ER□□□□□□□□□□r□d □ r□d □□□A□□r□□□□□d M□□□ □D□d □ C□□□□ □r□d □□□A□r□□□

□□ S□□r□□ □□ □□□ A□□□□ R□□□□□□□□□S□□□□□□□□ A□ □ □□□□□□□□r□d □□ □ □ □□□□ C□r□□□□ R□□□□□□ □□d A□□□□□□□□ □□C□
□□ □□□ □□□□S□□□□ □□□ □□ □□□□□ □ □ □□□□ □□□ □□ □□□□□ □ □ □□
□□ E□□□□□r□□ □ □□ □□□□□ □ □ □□
□□ S□□□□□□□ □□r S□□□r□□ □□□□
□□ □□□d□□□ □□r S□□□r□□ □ □□□d□□□ □□□□□□□□□□□□ □□□□□□□□□
□□ C□□□r□□□□ □□r S□□□r□□ □□□□□□ □□□ □□□□□□ □□□ □ □□
□□ Color: As selected from manufacturer's full ra□□□□
□□ S□□□d□rd□□□ □□□□□□□□□□□□□□AS□M D□□□□AS□M D□□□□ □□□□□ □□□AS□M D□□□□ □C□□□□ □ □ □d R□□□□□□□□□□□AS□M D□□□□AS□M D□□□□ □C□□□□ □ □ □d R□□□□□□□□□□AS□M E□□□□□ □ □□□ □C□□□A □□r□ R□□□□□□□□□□CCRES AC□□□□□ □ ER□□□□□□□□□□d □□r□d □ r□d□□□A□□r□□□□□

□□ S□□r□□ □□ □A□□□□ R□□□□□□□□□M□r□□□ S□□□□□□□□ A□ □ □□□□□□□□r□d □□ □ □ □□□□ C□r□□□□ R□□□□□□ □□d A□□□□□□□□□C□
□□ □□□ □□□□S□□□□ □□□□□□□ □□□ □□□□□ □ □ □□□□ □□□□□□□ □□□ □□□□□ □ □ □□
□□ E□□□□□r□□ □□□□□□ □□□ □□□□□ □ □ □□
□□ S□□□□□□□ □□r S□□□r□□ □□□□
□□ □□□d□□□ □□r S□□□r□□ □ □□□d□□□ □□□□□□□□□□□□ □□□□□□□□□
□□ C□□□r□□□□ □□r S□□□r□□ □□□□□□ □□□ □□□□□□ □□□ □ □□
□□ Color: As selected from manufacturer's full range.
□□ S□□□d□rd□□□ □□□□□□□□□□□□□□AS□M D□□□□AS□M D□□□□ □□□□□ □□□AS□M D□□□□ □C□□□□ □ □ □d R□□□□□□□□□□□AS□M D□□□□AS□M D□□□□ □C□□□□ □ □ □d R□□□□□□□□□□AS□M E□□□□□ □ □□□ □C□□□A □□r□ R□□□□□□□□□□CSA A□□□□□□□□CCES AC□□□□□□□d □□ER□□□□□□□□

□□ S□□r□□ □□ □□□ A□□□□ R□□□□□□□□□M□r□□□ S□□□□□□□□ A□ □ □□□□□□□□r□d □□ □ □ □□□□ C□r□□□□ R□□□□□□ □□d A□□□□□□□□□C□
□□ □□□ □□□□S□□□□ □□□□□□□ □□□ □□□□□ □ □ □□□□ □□□□□□□ □□□ □□□□□ □ □ □□
□□ E□□□□□r□□ □□□□□□ □□□ □□□□□ □ □ □□
□□ S□□□□□□□ □□r S□□□r□□ □□□□
□□ □□□d□□□ □□r S□□□r□□ □ □□□d□□□ □□□□□□□□□□□□ □□□□□□□□□
□□ C□□□r□□□□ □□r S□□□r□□ □□□□□□ □□□ □□□□□□ □□□ □ □□
□□ Color: As selected from manufacturer's full range.
□□ S□□□d□rd□□□ □□□□□□□□□□□□□□AS□M D□□□□AS□M D□□□□ □□□□□ □□□AS□M D□□□□ □C□□□□ □ □ □d R□□□□□□□□□□□AS□M D□□□□AS□M D□□□□ □C□□□□ □ □ □d R□□□□□□□□□□AS□M E□□□□□ □ □□□ □C□□□A □□r□ R□□□□□□□□□□CCRES AC□□□□□□□d □□ER□□□□□□□□

□ □ C□□□□□□□□ □□ □□□ A□□□□ R□□□□□□□□□S□□□□□□□□ A□ □ □□□□□□□□r□d □□ □ □ □□□□ C□r□□□□ R□□□□□□ □□d A□□□□□□□□ □□C□
□□ □□□ □□□□S□□□□ □□□ □□ □□□□□ □ □ □□□□ □□□ □□ □□□□□ □ □ □□
□□ E□□□□□r□□ □ □□ □□□□□ □ □ □□
□□ S□□□□□□□ □□r S□□□r□□ □□□□
□□ □□□d□□□ □□r S□□□r□□ □ □□□d□□□ □□□□□□□□□□□□ □□□□□□□□□
□□ C□□□r□□□□ □□r S□□□r□□ □□□□□□ □□□ □□□□□□ □□□ □ □□

Fiberglass-Based Asphalt Shingles & Accessories

Guide Specifications

□□ C□□r□A□ selected from manufacturer's full range.
□□ S□□□d□rd□□□ □□□□□□□□□□□□□□□AS□M D□□□□□AS□M D□□□□□ □□□□□ □□□AS□M D□□□□□ □C□□□□ □ □ □□d R□□□□□□□□□□□□□AS□M D□□□□□AS□M D□□□□□ □C□□□□ □ □ □□d R□□□□□□□□□□□□AS□M E□□□□□□ □ □□□□ □C□□□□ A □□r□ R□□□□□□□□□□□□□□CC□ES AC□□□□□□ □ ER□□□□□□□□□□□d □□□r□d□ □r□d□□□ A□□r□□□□□

□□ M□□□r□□ S□r□□□□ R□□□□□ □□□ A□□□□□ R□□□□□□□□□□□ A□ □ □□□□□□□□□r□d □□□ □ □ □□□□ C□r□□□□ R□□□□□□ □□d A□□□□□□□□ □□C□
□□ □ □□□ □□□□□S□□□□□ □□□ □□ □□□□□ □ □□□□ □□□ □□ □□□□□ □ □ □□
□□ E□□□□□□r□□ □□□ □□ □□□□□ □ □ □□
□□ R□□□□ □□□r S□□□□r□□ □□□
□□ C□□□r□□□□ □□□r S□□□□r□□ □□□□□□ □□□ □□□□□□□ □□□ □ □□
□□ S□□□d□rd□□□ □□□□□□□□□□□□□□□AS□M E□□□□□□ □ □□□□ □C□□□□ C □□r□ R□□□□□□□□□□□□□□d □□□r□d□ □r□d□□□ A□□r□□□□□

□□□□ □□□ **A□D R□D□E □□ □□□ □LE□**

□r□□□d□ □□□ □□d r□d□□ □□□□□□□□□ □□□□r □□r□ □□□□□□d □□ □□□□ □□□□ □□□□□□□d □□r□□□□

□□□□ □ □E □□ S□EC□□□□ER□□D□□□□□ □□□ □□d r□d□□ □□□□□□□□ □r□d□□□□ r□□□ □□□□ □□□□□□□□□□ □□□□□□r□ □□□□r□□□□□d□
□□□□ □ □E □□ S□EC□□□□ER□□ □□r□□□ □ □□□ □□□□ □ □□□□□□□□□□r□r r□□□□□□□□□r□d□□□□□□□□□□□□□□□□

A□ D□r□R□d□□□□ □ □□ □□d R□d□□ □A□□□□ R□□□□□□□□□S□□□□□□□ □ □□□ S□□□□□□□□ A□ □ □□□□□□□□□r□d □□□ □ □ □□□□ C□r□□□□ R□□□□□□ □□d A□□□□□□□□□C□
□□ □□□□ □□r□□□□□d□□□□□ □□□□□□r□□ □□□□□□□□□d □□r□□ □□□□□ □□□□□□□□□□□□□□ □r□□d□□□ □□□□□□□□□□□□□□ d□r□□□□□□ □□□d d□□ □□□□□□□
□□ Nominal Size: 12 in (305 mm) by 10 ⅝ in (270 mm) with 8 in (203 mm) exposure
□□ S□□□d□rd□□□ □□□□□□□□□□□□□□□AS□M D□□□□□ □□□□□ □□□AS□M D□□□□□ □C□□□□ □ □ □□d R□□□□□□□□□□□□□□ AS□M D□□□□□AS□M E□□□□□□ □ □□□□ □C□□□□ A □□r□ R□□□□□□□□□□□□□□CC□ES AC□□□□□□ □ ER□□□□□□□□□□ □□□r□d□ □r□d□□□ A□□r□□□□□M□□□ □□D□d □ C□□□□□ □r□d□□□ A□□r□□□□□□□□d CSA A□□□□□□□

□□ LongRidge™ Extended Hip & Ridge (Algae Resistant□S□□□□□□□ □ □□□ S□□□□□□□A□ □ □□□□□□□□□r□d □□ □ □ □□□□ C□r□□□□ R□□□□□□ □ A□□□□□□□□□C□
□□ Extended 10" exposure provides an attractive, clean and consistent roof line for enhanced curb □□□□□□□□
□□ □ □□□ □□□□□S□□□□□ □□□ □ □□□□□□ □ □ □□□□ □□□ □□ □□□□□□ □ □ □□ □□□ □□ □□□□□□ □ □ □□□□□□□□r□□
□□ □□□□□□ S□□□□□ □□□ □ □□□□□□ □ □ □□□□ □□□ □□ □□□□□□ □ □ □
□□ S□□□d□rd□□□ □□□□□□□□□□□□□□□AS□M D□□□□□ □□□□□ □□□AS□M D□□□□□ □C□□□□ □ □ □□d R□□□□□□□□□□□□□□ AS□M D□□□□□AS□M E□□□□□□ □ □□□□ □C□□□□ A □□r□ R□□□□□□□□□□□□□□CC□ES AC□□□□□□ □ ER□□□□□□□□□□

C□ R□□ER□d□□□□ □ □□ □□d R□d□□ □A□□□□ R□□□□□□□□□S□□□□□□□ □ □□□ S□□□□□□□□ A□ □ □□□□□□□□□r□d □□□ □ □ □□□□ C□r□□□□ R□□□□□□ □□d A□□□□□□□□□C□
□□ □□d□□□□□ d□□□□□□ □r□□□d□□ □ □□□□□□□□□r□d d□□ □□□□□□□ □□□□□□ □□□□ □□d r□d□□□□□
□□ □ □□□ □□□□□S□□□□□ □□□ □□ □□□□□□ □ □ □□□□ □□□ □□ □□□□□□ □ □ □□ □□□ □□ □□□□□□ □ □ □□□□□□□□r□□
□□ □□□□□□ S□□□□□ □□□ □□ □□□□□□ □ □ □□□□ □□□ □□ □□□□□□ □ □ □□
□□ S□□□d□rd□□□ □□□□□□□□□□□□□□□AS□M D□□□□□ □□□□□ □□□AS□M D□□□□□ □C□□□□ □ □ □□d R□□□□□□□□□□□□□□ AS□M D□□□□□AS□M E□□□□□□ □ □□□□ □C□□□□ A □□r□ R□□□□□□□□□□□□□□CC□ES AC□□□□□□ □ ER□□□□□□□□□□ □□d □□□r□d□ □r□d□□□ A□□r□□□□□

D□ D□□□R□d□□□□ □ □□ □□d R□d□□ □□ □□ A□□□□□ R□□□□□□□□□S□□□□□□□ □ □□□ S□□□□□□□□ D□r□□□□□□□□□□□□□□ □□□□□□□□□□ □□□□□□r□□□□□□ □ □□□□ S□S□□ □d□□□□d □□□□□□□□□□r□□d□□ □ □□□□ □□ d□□ □□□□□□□ □□d □□□□□ □□ □□□ □□□ □□d r□d□□□
□□ □ □□□ □□□□□S□□□□□ □□□□□□□□ □□ □□□□□□ □ □□ □□□□ □ □□ □□□□□□ □ □ □□□□d □□□□□□□□ □□ □□□□□□ □ □ □□□□ □□□ □□ □□□□□□ □ □ □ □ □□□ □ □□ □□□□□□ □ □ □□□□□□□□r□□
□□ S□□□d□rd□□□ □□□□□□□□□□□□□□□ AS□M D□□□□□ □□□□□ □□□AS□M D□□□□□ □C□□□□ □ □ □□d R□□□□□□□□□□□□□□ AS□M D□□□□□AS□M E□□□□□□ □ □□□□ □C□□□□ A □□r□ R□□□□□□□□□□□□□□CC□ES AC□□□□□□ □ ER□□□□□□□□□□ □□d CSA A□□□□□□□

Fiberglass-Based Asphalt Shingles & Accessories

Guide Specifications

E. [illegible]
1. [illegible]
2. [illegible]
3. [illegible]
4. [illegible]

F. [illegible]
1. [illegible]
2. [illegible]
3. [illegible]
4. [illegible]

G. [illegible]
1. [illegible]
2. [illegible]
3. [illegible]
4. [illegible]

H. [illegible]
1. [illegible]
2. [illegible]
3. [illegible]
4. [illegible]

I. [illegible]
1. [illegible]
2. [illegible]
3. [illegible]

J. [illegible]
1. [illegible]
2. [illegible]
3. [illegible]
4. [illegible]

Fiberglass-Based Asphalt Shingles & Accessories

Guide Specifications

PART 1 – GENERAL

NOTE TO SPECIFIER: Delete items not applicable to project. Coordinate with other specification sections as required.
NOTE TO SPECIFIER: Select appropriate shingle and accessory products for project conditions.

1.1 Summary
A. Section Includes: Asphalt roofing shingles, underlayment, and accessories.
1. Related Sections: Section [_____] – Roof Insulation.
2. Related Sections: Section [_____] – Sheet Metal Flashing and Trim.

1.2 Summary
A. Section Includes: Asphalt roofing shingles, underlayment, and accessories.
1. Provide shingles that comply with ASTM D7158 Class H, ASTM D3462, ASTM D3018 Type I, and ASTM E108 Class A and UL 790 Class A.
2. Related Sections: Section [_____] – Roof Insulation.

1.3 Summary
A. Section Includes: Asphalt roofing shingles, underlayment, and accessories.
1. Provide shingles that comply with ASTM D7158 Class H, ASTM D3462, ASTM D3018 Type I, and ASTM E108 Class A and UL 790 Class A and CCMC 13064 and ULC S107 Class A.
2. Related Sections: Section [_____] – Roof Insulation.

1.4 Summary
A. Section Includes: Asphalt roofing shingles, underlayment, and accessories.
1. Provide shingles that comply with ASTM D7158 Class H, ASTM D3462, ASTM D3018 Type I, and ASTM E108 Class A and UL 790 Class A and CCMC 13064 and ULC S107 Class A and Miami-Dade County Product Control Approval.
2. Related Sections: Section [_____] – Roof Insulation.

PART 2 – PRODUCTS

NOTE TO SPECIFIER: Delete items not applicable to project. Coordinate with other specification sections as required.
NOTE TO SPECIFIER: Select appropriate shingle and accessory products for project conditions.

2.1 Summary
A. Section Includes: Asphalt roofing shingles, underlayment, and accessories.
1. Manufacturer: Owens Corning Roofing and Asphalt, LLC.
2. Related Sections: Section [_____] – Roof Insulation.
3. Related Sections: Section [_____] – Sheet Metal Flashing and Trim.
4. Provide shingles that comply with ASTM D7158 Class H, ASTM E108 Class A and UL 790 Class A and CCMC 13064 and ULC S107 Class A and Miami-Dade County Product Control Approval.

2.2 Summary
A. Section Includes: [_____] Asphalt roofing shingles, underlayment, and accessories.
1. Manufacturer: Owens Corning Roofing and Asphalt, LLC.
2. Related Sections: Section [_____] – Roof Insulation.
3. Related Sections: Section [_____] – Sheet Metal Flashing and Trim.
4. Provide shingles that comply with ASTM D7158 Class H, ASTM E108 Class A and UL 790 Class A and CCMC 13064 and ULC S107 Class A and Miami-Dade County Product Control Approval.
5. Provide shingles that comply with [_____].

2.3 Summary
A. Section Includes: [_____] Asphalt roofing shingles, underlayment, and accessories.
1. Manufacturer: Owens Corning Roofing and Asphalt, LLC.
2. Related Sections: Section [_____] – Roof Insulation.
3. Related Sections: Section [_____] – Sheet Metal Flashing and Trim.
4. Provide shingles that comply with ASTM D7158 Class H, ASTM E108 Class A and UL 790 Class A and CCMC 13064 and ULC S107 Class A and Miami-Dade County Product Control Approval.
5. Provide shingles that comply with [_____].

PART 3 – EXECUTION

NOTE TO SPECIFIER: Delete items not applicable to project. Coordinate with other specification sections as required.
NOTE TO SPECIFIER: Select appropriate shingle and accessory products for project conditions.

3.1 Summary
A. Section Includes: Asphalt roofing shingles, underlayment, and accessories.
1. Manufacturer: Owens Corning Roofing and Asphalt, LLC.
2. Related Sections: Section [_____] – Roof Insulation.
3. Related Sections: Section [_____] – Sheet Metal Flashing and Trim.
4. Provide shingles that comply with ASTM D7158 Class H, ASTM E108 Class A and UL 790 Class A and CCMC 13064 and ULC S107 Class A and Miami-Dade County Product Control Approval.

3.2 Summary
A. Section Includes: [_____] Asphalt roofing shingles, underlayment, and accessories.
1. Manufacturer: Owens Corning Roofing and Asphalt, LLC.
2. Related Sections: Section [_____] – Roof Insulation.
3. Related Sections: Section [_____] – Sheet Metal Flashing and Trim.
4. Provide shingles that comply with ASTM D7158 Class H, ASTM E108 Class A and UL 790 Class A and CCMC 13064 and ULC S107 Class A and Miami-Dade County Product Control Approval.

3.3 Summary
A. Section Includes: [_____] Asphalt roofing shingles, underlayment, and accessories.
1. Manufacturer: Owens Corning Roofing and Asphalt, LLC.
2. Related Sections: Section [_____] – Roof Insulation.
3. Related Sections: Section [_____] – Sheet Metal Flashing and Trim.
4. Provide shingles that comply with ASTM D7158 Class H, ASTM E108 Class A and UL 790 Class A and CCMC 13064 and ULC S107 Class A and Miami-Dade County Product Control Approval.

Fiberglass-Based Asphalt Shingles & Accessories

Guide Specifications

D. [illegible] A [illegible] C [illegible] R [illegible] A [illegible] C.
1. [illegible]
2. R [illegible]
3. S [illegible]
4. S [illegible] ASTM D [illegible] ASTM E [illegible] CSA [illegible] R [illegible] ER [illegible]

E. [illegible] S [illegible] M [illegible] C [illegible] R [illegible] A [illegible] C.
1. [illegible]
2. [illegible] C [illegible]
3. D [illegible]
4. R [illegible]
5. S [illegible]
6. S [illegible] ASTM D [illegible] ASTM E [illegible] CSA C [illegible] R [illegible] ER [illegible] M [illegible] D [illegible] C [illegible] A [illegible]

[illegible] CSA [illegible]
[illegible] CSA [illegible] C [illegible]

[illegible] MEC[illegible]ALL[illegible] ED [illegible]DERLA[illegible]ME[illegible]

[illegible] SPEC[illegible]ER[illegible]

[illegible] SPEC[illegible]ER[illegible]

A. [illegible]™ R [illegible]
1. [illegible]
2. R [illegible]
3. R [illegible]
4. C [illegible] R [illegible]
5. S [illegible] ASTM D [illegible] ASTM D [illegible] ASTM D [illegible] A [illegible]

B. [illegible] S [illegible] R [illegible]
1. [illegible]
2. R [illegible]
3. R [illegible]
4. C [illegible] R [illegible]
5. S [illegible] ASTM D [illegible] ASTM D [illegible] ASTM E [illegible] CSA [illegible] R [illegible] CC[illegible]ES AC [illegible] A [illegible] M [illegible] D [illegible] C [illegible] A [illegible]

C. D [illegible] D [illegible] R [illegible]
1. [illegible]
2. R [illegible]
3. R [illegible]
4. C [illegible] R [illegible]
5. S [illegible] CC[illegible]ESR [illegible] ASTM E [illegible] CSA [illegible] R [illegible] A [illegible] M [illegible] D [illegible] C [illegible] A [illegible]

Fiberglass-Based Asphalt Shingles & Accessories

Guide Specifications

[illegible]

A. DeckSeal [illegible]
1. [illegible]
2. [illegible]
3. [illegible]
4. DeckSeal™ [illegible]
5. DeckSeal™ [illegible]
   1. DeckSeal™ SBS SA Cap Sheet [illegible]
   2. DeckSeal™ SBS SA [illegible]
   3. DeckSeal™ MA Nailbase [illegible]
6. [illegible]
7. [illegible]
8. [illegible]

[illegible]

A. [illegible]
1. [illegible]
2. [illegible]
3. [illegible]
4. [illegible]
5. [illegible] ICC-ES AC [illegible]

B. [illegible]
1. [illegible]
2. [illegible]
3. [illegible]
4. [illegible]

Fiberglass-Based Asphalt Shingles & Accessories

Guide Specifications

[illegible] S[illegible]d[illegible]rd[illegible] [illegible]CC[illegible]ESR [illegible] [illegible]d[illegible]Dr[illegible] R[illegible] r[illegible] [illegible]d S[illegible] [illegible]r[illegible] [illegible]d [illegible] ER[illegible]r[illegible]d[illegible] [illegible]r[illegible]d[illegible] A[illegible]r[illegible]d M[illegible] D[illegible]d[illegible] C[illegible]r[illegible]d[illegible] A[illegible]r[illegible]

C[illegible] [illegible]S[illegible]r[illegible] [illegible] S[illegible]r[illegible] [illegible]d M[illegible]r[illegible] R[illegible]d[illegible]

[illegible]

D[illegible] [illegible]S[illegible]r[illegible] [illegible] S[illegible]r[illegible] [illegible]d M[illegible]r[illegible] R[illegible]d[illegible]

[illegible]

E[illegible] [illegible]S[illegible]r[illegible] S[illegible]R[illegible]r[illegible]E™ R[illegible]d R[illegible]d[illegible]

[illegible]

[illegible] [illegible]S[illegible]r[illegible] M[illegible]S[illegible] R[illegible]

[illegible]

[illegible] [illegible]S[illegible] R[illegible]

[illegible]

Fiberglass-Based Asphalt Shingles & Accessories

Guide Specifications

[illegible]

Fiberglass-Based Asphalt Shingles & Accessories

Guide Specifications

[illegible]

Fiberglass-Based Asphalt Shingles & Accessories

Guide Specifications

Fiberglass-Based Asphalt Shingles & Accessories

Guide Specifications

A. [illegible]

B. [illegible]

C. [illegible]

D. [illegible]

1. [illegible]
2. [illegible]

[illegible] PRE[illegible]ARA[illegible]

A. [illegible]

B. [illegible]

C. [illegible]

D. [illegible]

E. [illegible]

1. [illegible]
2. [illegible]
3. [illegible]
4. [illegible]

[illegible] [illegible]DERLA[illegible]ME[illegible] [illegible]ALLA[illegible]

A. [illegible] Owens Corning™ [illegible]

1. [illegible]

Fiberglass-Based Asphalt Shingles & Accessories

Guide Specifications

[illegible]

C. [illegible]

D. [illegible]

E. [illegible]

[illegible]

A. [illegible] Owens Corning™ [illegible]

B. [illegible]

C. [illegible]

D. [illegible]

Fiberglass-Based Asphalt Shingles & Accessories

Guide Specifications

E. [illegible]

[illegible]

[illegible]

A. [illegible]

B. [illegible]

C. [illegible]

D. [illegible]

E. [illegible]

[illegible]

A. [illegible] Owens Corning™ [illegible]

B. [illegible]

1. [illegible]
2. [illegible]
3. [illegible]
4. [illegible]

[illegible]

A. [illegible]

B. [illegible]

END [illegible] SECTION

[illegible]

[illegible]

Oakridge® & TruDefinition® Oakridge® Shingles

Installation Instructions

Instrucciones Para La Instalación De Tejas Oakridge®

Oakridge® & TruDefinition® Oakridge® Shingles

Application Instructions

Before installing this product, check local building codes for their roofing requirements.

These shingles are designed for new or re-roofing work over any properly built and supported wood roof deck having adequate nail holding capacity and a smooth surface. Check local building codes.

Precautionary Note:

The manufacturer will not be responsible for problems resulting from any deviation from the recommended application instructions and the following precautions:

Roof Top Loading: Lay shingle bundles flat. Do not bend over the ridge.

Roof Deck: ▪ 6" Minimum roof deck boards ▪ Minimum 3/8" plywood ▪ Minimum 7/16" OSB

Regardless of deck type used, the roofing installer must:

1. Install the deck material in strict compliance with the deck manufacturer's instructions.
2. Prevent the deck from getting wet before, during and after installation.

Eave Flashing: Use Owens Corning® self-sealing ice and water barrier on the eaves in all regions of the country where roofs are susceptible to leaks from ice and water backup.

Ventilation: Must meet local building codes.

Handling: Use extra care in handling shingles when the temperature is below 40°F.

Storage: Store in a covered ventilated area at a maximum temperature of 110°F. Bundles should be stacked flat. Protect shingles from weather when stored at the job site. Do not store near steam pipes, radiators, etc.

Fastener requirement: Use galvanized steel, stainless steel, or aluminum nails minimum 12 gauge shank with 3/8" diameter head. Owens Corning Roofing recommends that fasteners comply with ASTM F 1667. Check local building codes.

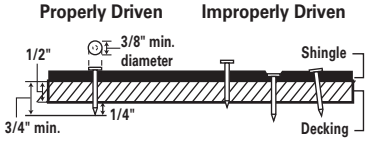

All Fasteners must penetrate at least 3/4" into the wood deck or completely through sheathing.

Notice: Owens Corning Roofing recommends the use of nails as the preferred method of attaching shingles to wood decking or other nailable surface.

Instrucciones de aplicación

Antes de colocar este producto, verifique los códigos locales de construcción para conocer los requisitos de su techo.

Estas tejas han sido diseñadas para la construcción de techos nuevos o el arreglo de techos existentes sobre plataformas de madera correctamente construidas y que poseen una capacidad de sujeción de clavos y una superficie lisa. Consulte los códigos de construcción locales.

Aviso importante:

El fabricante no se hará responsable por los problemas que surjan como consecuencia de no seguir exactamente las instrucciones de instalación recomendadas y de los siguientes avisos importantes:

Carga sobre los techos: Coloque los paquetes de tejas de manera plana sobre el techo. No los doble sobre la cumbrera.

Plataforma del techo: ▪ 6 pulgadas de mínimo sobre la estructura base del techo ▪ 3/8 pulg. como mínimo de madera triplay ▪ 7/16 pulg. como mínimo para paneles de fibra orientada

Cualquiera que sea el tipo de superficie utilizada, el instalador del techo debe:

1. Instalar el material de la plataforma siguiendo estrictamente las instrucciones del fabricante.
2. Evitar que la plataforma se moje antes, durante y después de la instalación.

Tapajuntas para aleros: Utilice la barrera autosellante resistente al agua y al hielo de Owens Corning en los aleros de todas las regiones del país en las que los techos estén expuestos a filtraciones por causa de la acumulación de agua y hielo.

Ventilación: Debe cumplir con los códigos de construcción locales.

Uso: Tenga mucho cuidado al usar y colocar las tejas cuando la temperatura sea inferior a los 40°F.

Almacenamiento: Almacene en un área cubierta y ventilada a una temperatura que no sobrepase los 110°F/43°C. Almacenar en forma plana. Proteja las tejas del clima cuando las almacene en el lugar de trabajo. No las almacene cerca de tuberías de vapor, radiadores, etc.

Requisito de sujetador: Use clavos de acero galvanizado, acero inoxidable o de aluminio, de calibre 12 como mínimo, con un diámetro de cabeza de 3/8 pulg. Owens Corning Roofing recomienda que los sujetadores cumplan con la norma ASTM F 1667. Consulte los códigos de construcción locales.

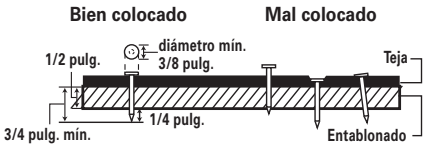

Todos los sujetadores deben penetrar al menos 3/4 pulg. en la plataforma del techo de madera o atravesar completamente los revestimientos de madera triplay.

Aviso: Owens Corning Roofing recomienda el uso de clavos como método preferido para fijar tejas a superficies de madera u otras superficies aptas para clavos.

CAUTION

ROOF SURFACE MAY BE SLIPPERY: Especially when wet or icy. Use a fall protection system when installing. Wear rubber soled shoes. Walk with care.

FALLING HAZARD: Secure area below work and materials on roof. Unsecured materials may slide on roof. Place on level plane or secure to prevent sliding. Wear a hard hat.

WARNING: This product contains a chemical known to the State of California to cause cancer.

CUIDADO

EL TECHO PUEDE ESTAR RESBALOSO: Especialmente cuando está mojado o cubierto de hielo. Al realizar la instalación, utilice un sistema de protección contra las caídas. Utilice zapatos con suela de goma. Camine con cuidado.

PELIGRO DE CAÍDA DE OBJETOS: Asegure el área que se encuentra debajo de la zona de trabajo y los materiales que están sobre el techo. Los materiales que no estén sujetos pueden caerse del techo. Colóquelos en un lugar sin pendiente o sujételos para que no se caigan. Use un casco resistente.

ADVERTENCIA: Este producto contiene una sustancia química considerada cancerígena en el estado de California.

1 Specialty Eave Flashing:

Use Owens Corning® self-sealing ice and water barrier on the eaves in all regions of the country where roofs are susceptible to leaks from ice and water backup. Apply starting at the eave edge and extend upslope a minimum of 24 inches from the interior wall line. *See Fig. 1.*

Fig. 1 Specialty Eave Flashing
Tapajuntas especial para aleros

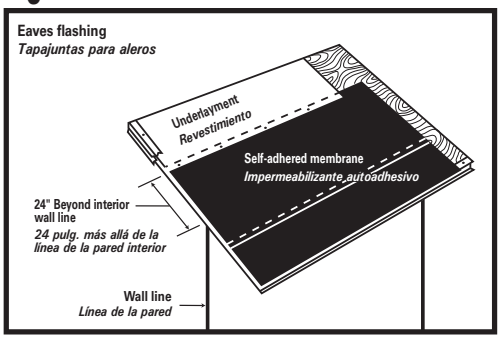

1 Tapajuntas especial para aleros:

Utilice la barrera autosellante resistente al agua y al hielo de Owens Corning en los aleros de todas las regiones del país en las que los techos estén expuestos a filtraciones por causa de la acumulación de agua y hielo. Para la instalación, comience en el borde del alero y extienda hacia arriba un mínimo de 24 pulgadas desde la línea de la pared interior. *Ver la Fig. 1.*

2 Underlayment:

Standard Slope (4" in 12" or more)

Application of underlayment, metal drip edges, and eaves flashing: *See Fig. 2.*

(A) Apply one layer of underlayment over metal drip edge at eaves. Use only enough fasteners to hold in place.

(B) Overlap successive courses 2". Overlap course ends 4". Side laps are to be staggered 6' apart.

(C) Apply metal drip edge over underlayment at rake.

Fig. 2 Underlayment Standard Slope
Pendiente estándar del revestimiento

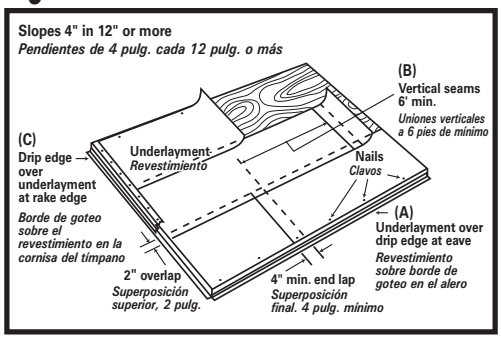

2 Revestimiento:

Pendiente estándar (4 pulg. cada 12 pulg. o más)

Instalación del revestimiento, bordes de goteo metálicos y tapajuntas de aleros: *Ver la Fig. 2.*

(A) Instale una sección del revestimiento sobre el goterón metálico del alero. Utilice la cantidad estrictamente necesaria de sujetadores para mantenerla en su lugar.

(B) Sobreponga las hileras siguientes 2 pulg. Sobreponga los extremos de las hileras 4 pulg. Los empalmes laterales deben escalonarse a 6 pies de distancia.

(C) Instale el borde de goteo de metal sobre el revestimiento en la cornisa.

3 Underlayment:

Low Slope (2" in 12" to less than 4" in 12")

Application of underlayment, metal drip edges, and eaves flashing: *See Fig. 3.*

(A) Apply 19" starter strip of underlayment over metal drip edge at eaves. Use only enough fasteners to hold it in place.

(B) Use 36" strip of underlayment for remaining courses, overlapping each course 19". Side laps are to be staggered 6' apart.

(C) Apply metal drip edge over underlayment at rake.

Or WeatherLock® self-adhered underlayment or equivalent with a standard over lap of 3" and metal drip edge. *See Fig. 3A.*

Fig. 3 Underlayment Low Slope
Pendiente baja del revestimiento

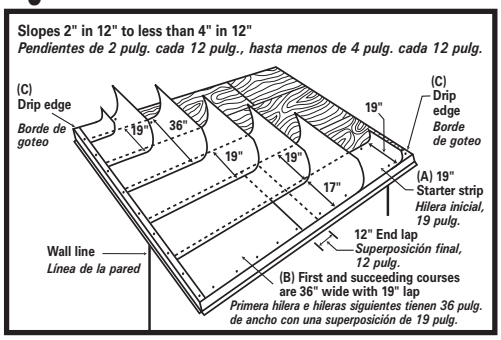

Fig. 3A Underlayment Low Slope
Pendiente baja del revestimiento

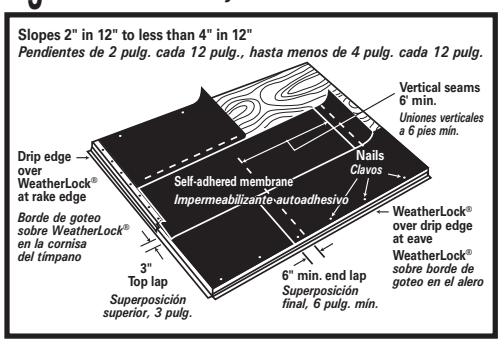

3 Revestimiento:

Pendiente baja (2 pulg. cada 12 pulg., a menos de 4 pulg. cada 12 pulg.) Instalación del revestimiento, bordes de goteo metálicos y tapajuntas de aleros: *Ver la Fig. 3.*

(A) Instale una sección inicial de 19 pulg. de revestimiento sobre el goterón metálico del alero. Utilice la cantidad estrictamente necesaria de sujetadores para mantenerla en su lugar.

(B) Use una sección de revestimiento de 36 pulg. para el resto de las hileras, sobreponiendo cada hilera 19 pulg. Los empalmes laterales deben escalonarse a 6 pies de distancia.

(C) Instale el borde de goteo de metal sobre el revestimiento en la cornisa.

O membrana autoadherente WeatherLock® o equivalente con una superposición estándar de 3 pulg. y borde de escurrimiento. *Ver la Fig. 3A.*

4 Shingle Fastening:

Place fasteners 6⅛" from bottom edge of each shingle and 1" from each end.

Standard Pattern Use four fasteners. *See Fig. 4.*

Six Nail Pattern Use six fasteners. *See Fig. 4A.*

Mansard or Steep Slope Fastening Pattern. Place fasteners 6⅛" from bottom edge to secure both layers of the shingle. *See Fig. 4B.*

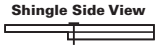

REQUIRED: For slopes exceeding 60 degrees or 21 inches per foot, use six fasteners and four spots of asphalt roof cement per shingle. Apply immediately; one 1" diameter spot of asphalt roof cement **under** each shingle tab. Center asphalt roof cement 2" up from bottom edge of shingle tab. *See Fig. 4B.*

Roof Cement where required must meet ASTM D-4586 Type I or II (Asbestos Free).

Six nail fastening pattern is required for maximum wind warranty. In addition, Owens Corning® Starter Shingles are required along the eave and rake. (See Starter Shingle instructions for details.)

Fig. 4 Standard Fastening Pattern
Esquema de instalación estándar

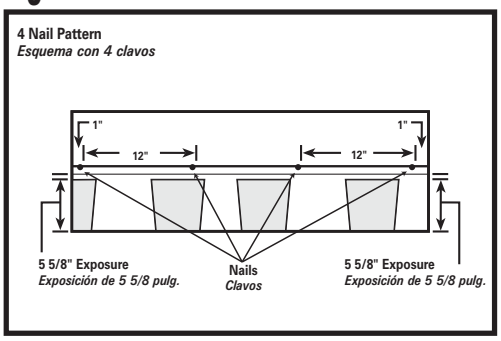

Fig. 4A Six Nail Fastening Pattern
Esquema de instalación con seis clavos

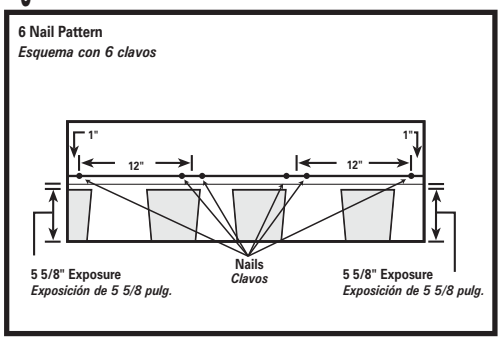

Fig. 4B Mansard or Steep Slope Fastening Pattern
Esquema de instalación en pendientes pronunciadas o mansardas

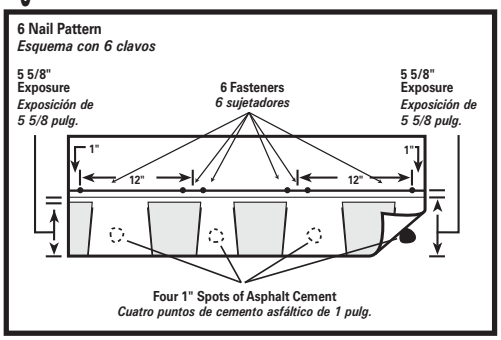

4 Sujeción de las tejas:

Coloque los sujetadores a 6⅛ pulg. a partir del borde inferior de cada teja y a 1 pulg. de cada extremo.

Esquema estándar. Utilice cuatro sujetadores. *Ver la Fig. 4.*

Esquema con seis clavos Para 6 sujetadores. *Ver la Fig. 4A.*

Esquema de instalación en pendientes pronunciadas o mansardas. Coloque los sujetadores a 6⅛ pulg. del borde inferior para ajustar ambas capas de la teja. *Ver la Fig. 4B.*

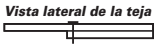

REQUISITO: Para pendientes de más de 60 grados o 21 pulg. por pie, utilice seis sujetadores y cuatro cantidades pequeñas de cemento asfaltado por teja. Instale inmediatamente una sección con 1 pulg. de diámetro de cemento asfaltado **debajo** de cada lengüeta de las tejas. Asegúrese de que el cemento asfaltado esté centrado 2 pulg. por encima del borde inferior de la lengüeta de la teja. *Ver la Fig. 4B.*

Cuando sea necesario utilizar **cemento para techos**, éste debe cumplir con la norma ASTM D-4586 Tipo I ó II (sin asbestos).

El esquema de fijación de seis clavos es obligatorio para la garantía máxima contra vientos. Además, es necesario instalar las tejas para la hilera inicial de Owens Corning® en las cornisas de tímpano y los aleros. (Consulte las instrucciones de las tejas para la hilera inicial para obtener información detallada).

5 Shingle Application:

These shingles are applied with a 6½" offset, with 5⅝" exposure, over prepared roof deck, starting at the bottom of the roof and working across and up. This will blend shingles from one bundle into the next and minimize any normal shade variation. Application with offsets of 4" or 8" are also acceptable.

Caution must be exercised to assure that end joints are no closer than 2" from fastener in the shingle below and that side laps are no less than 4" in succeeding courses. Refer to course application steps for specific instructions.

Starter Course:

Use an Owens Corning® Starter shingle product or trim 5⅝" from the starter course shingle. Trim 6½" off the rake of the starter course shingle and flush with the drip edge along the rake and eaves edge, and continue across the roof. Use 5 fasteners for each shingle, placed 2" to 3" up from eaves edge. *See Fig. 5.* **(If no drip edge is used, shingles must extend a minimum of ½" and no more than 1" from rake and eaves edge.)**

First Course:

Apply first course starting with the full shingle even with the starter course. *See Fig. 5A.* Fasten securely according to fastening instructions. *See Fig. 4.*

Second Course:

Remove 6½" from the left end of this shingle and apply the remaining piece over and above the first course shingle and flush with edge of the first course with 5⅝" exposure. *See Fig. 5B.* Fasten securely according to fastening instructions. *See Fig. 4.*

Third Course:

Remove 13" from the left end of this shingle and apply the remaining piece over and above the second course shingle flush with edge of the second course with 5⅝" exposure. *See Fig. 5C.* Fasten securely according to fastening instructions. *See Fig. 4.*

(continued on next page)

Fig. 5 Shingle Application
Instalación de tejas

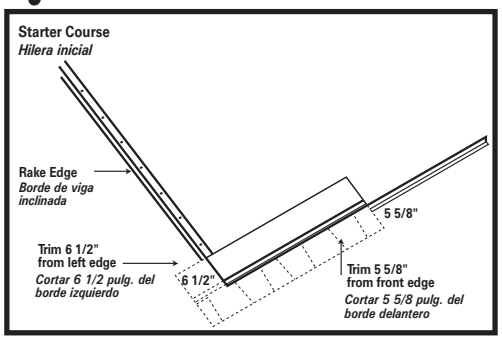

Fig. 5A Shingle Application
Instalación de tejas

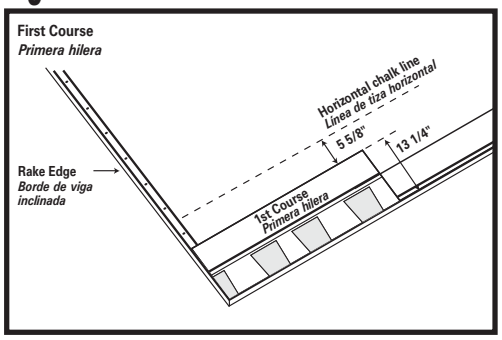

Fig. 5B Shingle Application
Instalación de tejas

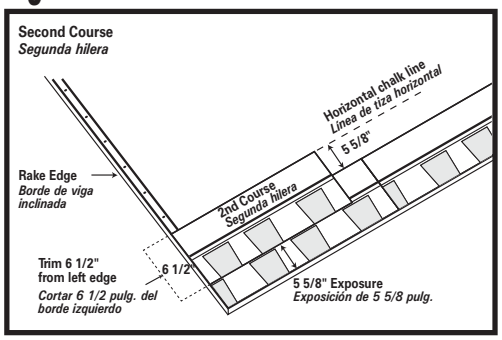

Fig. 5C Shingle Application
Instalación de tejas

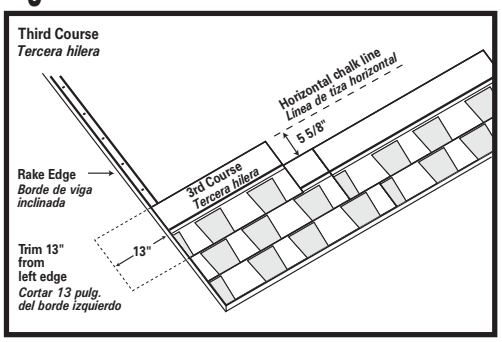

5 Instalación de las tejas:

Estas tejas se instalan con un desplazamiento de 6½ pulg., con una superficie expuesta de 5⅝ pulg., sobre plataformas de techos preparadas. La colocación comienza por la parte inferior del techo y se realiza en forma transversal hacia arriba. De esta manera, las tejas de un paquete se mezclan con las del siguiente y se reducen al mínimo las variaciones normales de tonalidad. También se pueden instalar tejas con un desplazamiento de 4 ó 8 pulg.

Asegúrese de que las uniones de los extremos no se encuentren a menos de 2 pulg. del sujetador de la teja que se encuentra más abajo, y que las superposiciones laterales no sean de menos de 4 pulg. en las hileras siguientes. Consulte los pasos de instalación de hileras para ver las instrucciones específicas.

Hilera inicial:

Utilice un rollo de inicio o corte 5⅝ pulg. de la teja de la hilera inicial. Corte 6½ pulg. desde la viga inclinada en la teja de la hilera inicial y extienda más allá de la viga inclinada y el borde del alero, y continúe a lo ancho del techo. Utilice 5 sujetadores para cada teja, colocados a una distancia de entre 2 y 3 pulg. del borde del alero. *Ver la Fig. 5.* **(Si no utiliza un borde de goteo, las tejas deben extenderse un mínimo de ½ pulg. y un máximo de 1 pulg. de la viga inclinada y el borde del alero.)**

Primera hilera:

Coloque la primera hilera comenzando con la teja entera alineada con la hilera inicial. *Ver la Fig. 5A.* Sujete firmemente de acuerdo con las instrucciones de sujeción. *Ver la Fig. 4.*

Segunda hilera:

Quite 6½" pulg. del borde izquierdo de esta teja y aplique la pieza restante sobre y por encima de la teja de la primera hilera y al ras del borde de la primera hilera, con 5⅝ pulg. de exposición. *Ver la Fig. 5B.* Sujete firmemente de acuerdo con las instrucciones de sujeción. *Ver la Fig. 4.*

Tercera hilera:

Quite 13 pulg. del borde izquierdo de esta teja y aplique la pieza restante sobre y por encima de la teja de la segunda hilera y al ras del borde de la segunda hilera, con 5⅝ pulg. de exposición. *Ver la Fig. 5C.* Sujete firmemente de acuerdo con las instrucciones de sujeción. *Ver la Fig. 4.*

(continúa en la página siguiente)

5 Shingle Application (cont.):

Fourth Course:

Remove 19½" from the left end of this shingle and apply the remaining piece over and above the third course shingle and flush with edge of the third course with 5⅝" exposure. *See Fig. 5D.* Fasten securely according to fastening instructions. *See Fig. 4.*

Fifth Course:

Remove 26" from the left end of this shingle and apply the remaining piece over and above the fourth course shingle and flush with edge of the fourth course with 5⅝" exposure. *See Fig. 5E.* Fasten securely according to fastening instructions. *See Fig. 4.*

Sixth Course:

Remove 32½" from the left end of this shingle and apply the remaining piece over and above the fifth course shingle and flush with edge of the fifth course with 5⅝" exposure. *See Fig. 5F.* Fasten securely according to fastening instructions. *See Fig. 4.*

Succeeding Courses:

For succeeding courses, repeat first through sixth course. *See Fig. 5G.*

Fig. 5D Shingle Application
Instalación de tejas

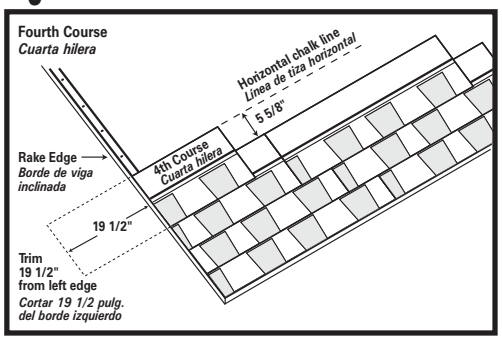

Fig. 5E Shingle Application
Instalación de tejas

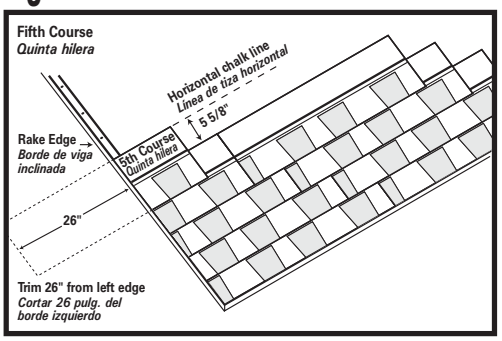

Fig. 5F Shingle Application
Instalación de tejas

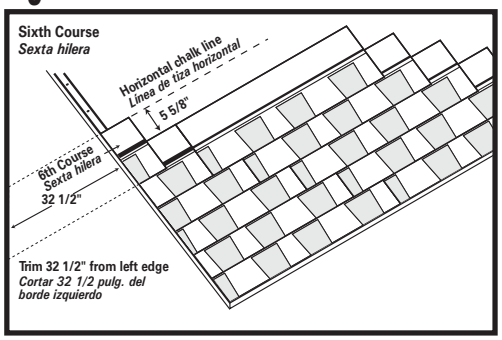

Fig. 5G Shingle Application
Instalación de tejas

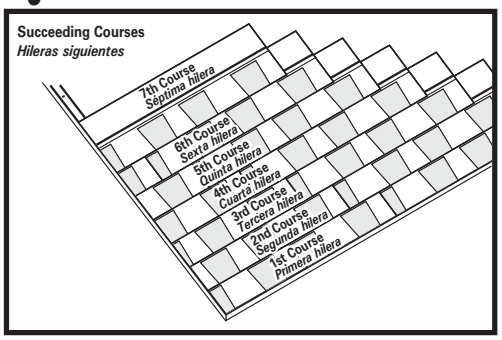

5 Instalación de las tejas (cont.):

Cuarta hilera:

Quite 19½ pulg. del borde izquierdo de esta teja y aplique la pieza restante sobre y por encima de la teja de la tercera hilera y al ras del borde de la tercera hilera, con 5⅝ pulg. de exposición. *Ver la Fig. 5D.* Sujete firmemente de acuerdo con las instrucciones de sujeción. *Ver la Fig. 4.*

Quinta hilera:

Quite 26 pulg. del borde izquierdo de esta teja y aplique la pieza restante sobre y por encima de la teja de la cuarta hilera y al ras del borde de la cuarta hilera, con 5⅝ pulg. de exposición. *Ver la Fig. 5E.* Sujete firmemente de acuerdo con las instrucciones de sujeción. *Ver la Fig. 4.*

Sexta hilera:

Quite 32½ pulg. del borde izquierdo de esta teja y aplique la pieza restante sobre y por encima de la teja de la quinta hilera y al ras del borde de la quinta hilera, con 5⅝ pulg. de exposición. *Ver la Fig. 5F.* Sujete firmemente de acuerdo con las instrucciones de sujeción. *Ver la Fig. 4.*

Hileras siguientes:

Para las hileras siguientes, repita los pasos que se indican desde la primera hasta la sexta hilera. *Ver la Fig. 5G.*

6 Valley Construction:

Closed-Cut Valley *See Fig. 6.*

A closed-cut valley can be used as an alternative to woven and open valley and is applied as follows:

Lay a 36" wide valley liner of self-adhered membrane underlayment or equivalent. A 36" wide minimum 50 lb. smooth surface roll roofing can also be used as a valley liner. Lay all shingles on one side of valley and across center line of valley a minimum of 12". Fasten a minimum of 6" away from center line on each side of valley. Strike a chalk line 2" from the center line of the unshingled side. Apply shingles on the unshingled side up to the chalk line and trim, taking care not to cut the underlying shingles. Clip upper corners of these shingles, cement and fasten. Both woven and metal valleys are acceptable alternatives.

Fig. 6 Closed-Cut Valley Construction
Construcción del valle con corte cerrado

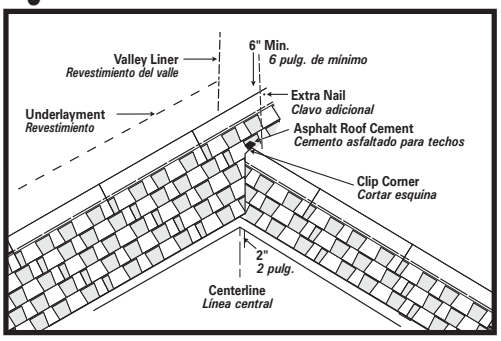

6 Construcción del valle:

Valle cerrado *Ver la Fig. 6.*

Un valle con corte cerrado puede ser usado como alternativa a un valle tejido o abierto y se coloca de la siguiente manera:

Coloque en el valle un impermeabilizante autoadhesivo o equivalente con 36 pulg. de ancho. Para revestir el valle, también se puede utilizar un rollo de techado de 36 pulg. de ancho y un mínimo de 50 libras. Coloque todas las tejas sobre un lado del valle y a través de la línea central del valle al menos 12 pulg. Sujete a un mínimo de 6 pulg. de la línea central a cada lado del valle. Marque una línea de tiza a 2 pulg. de la línea central del lado que no tiene tejas. Coloque las tejas del lado que no tiene tejas hasta la línea de tiza y recorte, con cuidado de no cortar las tejas que se encuentran debajo. Una los extremos superiores de estas tejas, coloque cemento y sujete. Se pueden utilizar valles de tejido o metal.

7 Step Flashing:

Use 10" long and 2" wider than expected exposure corrosion-resistant metal where roof planes butt against vertical sidewalls or chimneys. *See Fig. 7.*

Fig. 7 Step Flashing
Tapajuntas escalonado

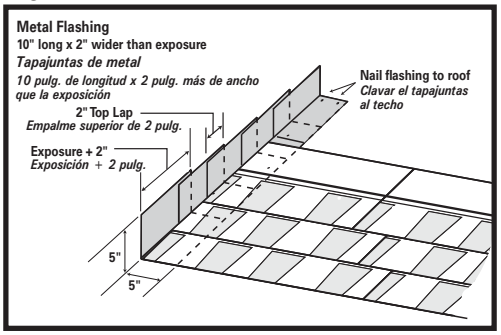

7 Revestimineto escalonado:

Utilice metal resistente a la corrosión con una exposición de 10 pulg. de longitud y de 2 pulg. más de ancho que la exposición esperada en los puntos en los que los planos del techo se unan a las paredes laterales verticales o a chimeneas. *Ver la Fig. 7.*

8 Hip & Ridge Application:

Use corresponding Owens Corning® Hip & Ridge shingles to best complement shingle color. Follow specific application instructions as printed on the Hip & Ridge shingle package. *See Fig. 8.*

Fig. 8 Hip & Ridge Application
Instalación de caballetes y cumbreras

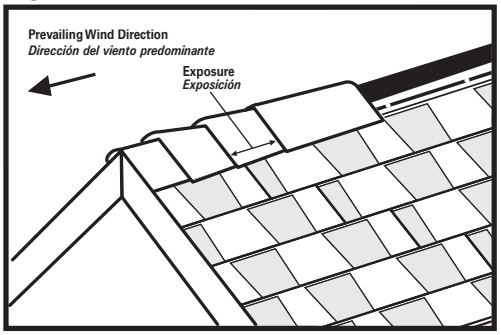

8 Aplicación para caballete y cumbrera

Utilice Owens Corning® tejas para caballetes y cumbreras. Siga las instrucciones de instalación del paquete de caballetes y cumbreras. *Ver la Fig. 8.*

OWENS CORNING ROOFING AND ASPHALT, LLC
ONE OWENS CORNING PARKWAY
TOLEDO, OHIO, USA 43659

1-800-GET-PINK®
www.owenscorning.com/roofing

Pub. No. 10003280-E. Printed in U.S.A. January 2018.
THE PINK PANTHER™ & © 1964–2018 Metro-Goldwyn-Mayer Studios Inc.
The color PINK is a registered trademark of Owens Corning. © 2018 Owens Corning.
All Rights Reserved.

Deck Defense®

High Performance Roof Underlayment

Moisture protection for your home.

Deck Defense® High Performance Roof Underlayment is a component of the Owens Corning® Total Protection Roofing System.™^

Block water damage.

When it comes to your new roof, don't take chances. Ask for the moisture protection that Owens Corning® Deck Defense® *High Performance Roof Underlayment* can provide.

New *Deck Defense* underlayment's durable synthetic construction provides an immediate line of defense—so strong it can protect your roof for up to 6 months** of UV exposure. It also acts as a secondary water-shedding barrier for your roof once shingles are installed. In addition, unlike standard felt underlayment, it comes with a 30-Year Limited Warranty*.

A roof is a big investment. That's why it's important to make sure it's done right from the beginning to help ensure it's protected from water damage in the attic. One of the first steps to a high-performing roof is using underlayment in conjunction with shingles to help shield your home from moisture infiltration.

Repels and protects

- Offers long-term moisture protection for your roof compared to standard felt underlayment
- Acts as a non-absorbent, secondary water-shedding barrier
- Reduces water intrusion when exposed

Guards and withstands

- Helps shield your home during roof installation
- Protects the roof deck for up to 6 months** of UV exposure
- 30-Year Limited Warranty*

Endures and performs

- Durable synthetic construction resists tearing when walked on
- Stays intact in high winds**
- Designed to reduce the chance for tears that can cause leaks compared to felt underlayment

Easy installation

- Extra-wide roll provides up to 5 times more coverage per roll than standard #30 felt underlayment
- Preprinted nailing pattern and overlap lines speed installation

High-traction, slip-resistant surface

- Specially engineered textured and coated top layer provides traction for a secure work area compared to other leading synthetic underlayments

Deck Defense® vs. Organic Felt underlayment — the right choice is clear.

	Deck Defense® Underlayment	Conventional #30 Organic Felt
Construction	100% Engineered Polyolefin	Asphalt/Organic Felt
Roll Size	1,000 sq. ft., 48" wide	200 sq. ft., 36" wide
Weight Per Square	3.3 lbs.[1]	20 lbs.
UV Exposure	Can be left exposed for up to 6 months**	Needs to be covered immediately
Warranty	30-Year Limited Warranty*	No warranty
Weather Performance	Does not curl or wrinkle when exposed to moisture	May curl, wrinkle and crack when exposed to moisture
Slip Resistance	Unique woven technology and coated surface aides in traction, even when wet	May become slick or wrinkled in wet conditions, leading to an unsafe walking surface
Nailing Pattern	Nailing aids for proper application, both in standard and high wind areas	No nailing guides
Durability	Repels and sheds water	Absorbs water and moisture
Surface Temperature	Light gray color reduces roof temperature when exposed	Black color absorbs heat and increases roof temperature
Tear Resistance	Resistant to tearing, even when walked on or in high winds	Often tears during installation and fastening, causing leaks and rework

The most important part of the roof? All of them.

It takes more than just shingles to protect your home. It takes an integrated system of components and layers designed to withstand the forces of nature outside while controlling temperature and humidity inside. The Owens Corning® Total Protection Roofing System™^ gives you the assurance that all of your Owens Corning® roofing components are working together to help increase the performance of your roof — and to enhance the comfort and enjoyment of those who live beneath it.

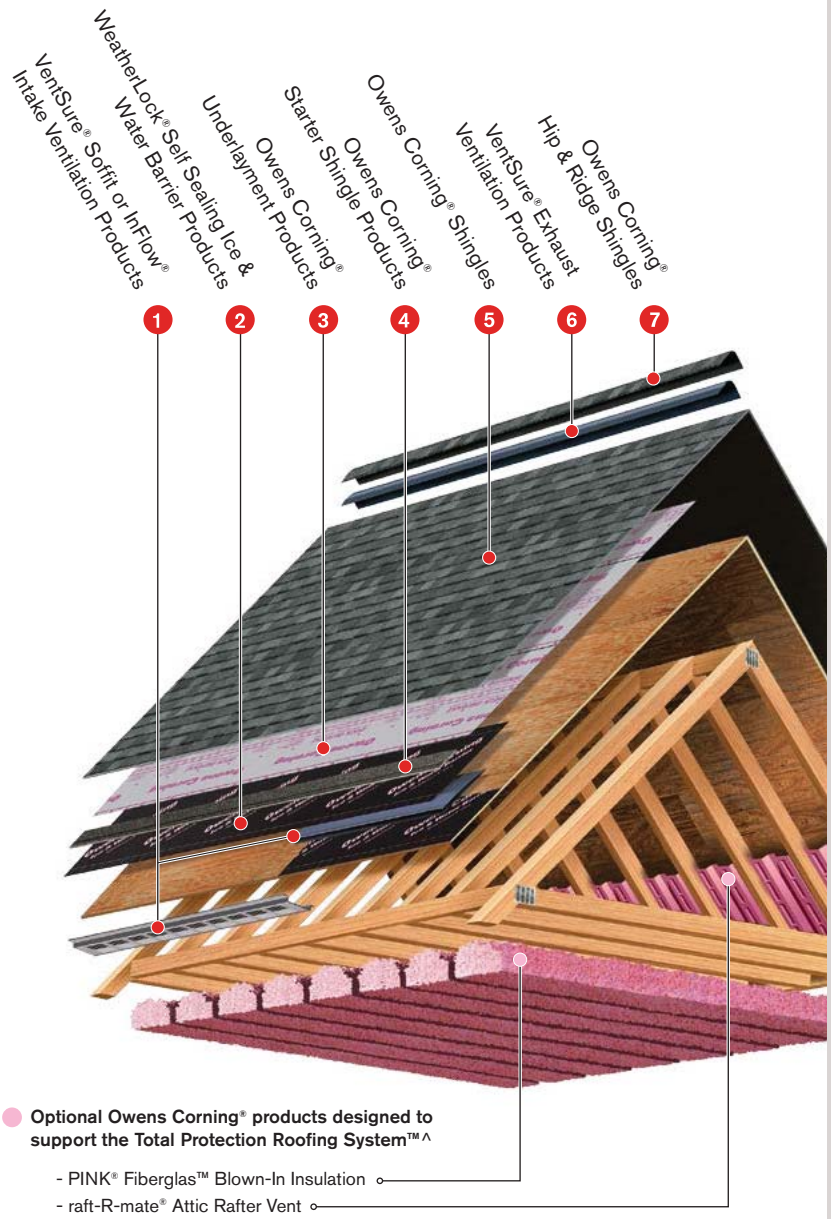

^ Excludes non-Owens Corning® roofing products such as flashing, fasteners and wood decking.
* See actual warranty for complete details, limitations and requirements.
** Special application required for extended exposure. See installation instructions.
† For non-asphaltic roofing materials, check with the manufacturer as to the suitability of using Deck Defense® High Performance Roof Underlayment. Install following the roofing manufacturer's application instructions.
†† Applies for all areas that recognize Miami-Dade County Product Control Section.
‡ Underlayment is tested as part of a roof assembly that includes wood decking, underlayment and asphalt shingles.
# International Code Council Evaluation Services Acceptance Criteria for Alternative Asphalt Shingles.
1 Excludes core weight.
2 Includes core weight.

Product Attributes

Warranty Length

30-Year Limited*

Application

Engineered for asphalt, tile and metal roof assemblies†

Typical Values

Length	250 ft.
Width	48 in.
Nominal Weight per Roll	36 lbs.[2]
Coverage (with 3-in. overlap)	937 sq. ft.
Exposed Color	Light gray
Surface Construction	Coated textured poly

Applicable Standards and Codes

- ASTM D226
- ASTM D4869
- ASTM E108/UL 790 (Class A Fire Resistance)‡
- Florida Product Approval
- ICC-ES AC188
- ICC-ESR 3229#
- Miami-Dade County Product Approval††

Want to know more about Owens Corning® products or find an Owens Corning Roofing Preferred Contractor in your area? It's easy to reach us:

1-800-GET-PINK®
www.owenscorning.com/roofing

OWENS CORNING ROOFING AND ASPHALT, LLC
ONE OWENS CORNING PARKWAY
TOLEDO, OHIO, USA 43659

1-800-GET-PINK®
www.owenscorning.com/roofing

Pub. No. 10010926-G. Printed in U.S.A. September 2015.THE PINK PANTHER™ & © 1964–2015 Metro-Goldwyn-Mayer Studios Inc. All Rights Reserved. The color PINK is a registered trademark of Owens Corning. © 2015 Owens Corning. All Rights Reserved.

(All Plants)

Owens Corning Roofing Preferred Contractors are independent contractors and are neither affiliates nor agents of Owens Corning Roofing and Asphalt , LLC, or its affiliated companies.

DRIP EDGE INSTALLATION

[illegible]

[illegible]

[illegible]

[illegible]

[illegible]

[illegible]

[illegible]

[illegible]

[illegible]
or obligation and is given and accepted at recipient's sole risk.
[illegible]

[illegible]

Owens Corning™ Roofing Shingle Products

HELPING YOU ACHIEVE LEED® CERTIFICATION

Owens Corning™ Roofing Products help protect from the elements and severe weather for commercial, institutional and high-rise residential buildings with a broad array of aesthetically appealing roofing products. This document applies to the LEED New Construction and Major Renovations, LEED Commercial Interiors, LEED Core & Shell, LEED for Schools and LEED for Existing Buildings, Operations & Maintenance products. As you pursue LEED Certification, rely on the products and expertise of Owens Corning.

LEED Certification and the awarding of credits, is based on the overall project design, properly designed building systems and construction assemblies, and the performance of the project as a whole. Roofing Shingle Products can be components in many roofing systems and assemblies. All components and assemblies should be considered when seeking credits within a given category. Owens Corning™ Shingle Products contribute to the categories listed below.

Owens Corning™ Roofing Shingle Products:

- Berkshire® Collection
- Woodmoor® Shingles
- Woodcrest® Shingles
- TruDefinition® Duration® Designers Color Collection
- TruDefinition® Duration® Shingles
- TruDefinition® Duration STORM® Shingles
- TruDefinition® Duration MAX™ Shingles
- TruDefinition® Oakridge® Shingles
- TruDefinition® WeatherGuard® HP Shingles
- Duration® Premium Cool Shingles
- Duration® Premium Shingles
- Supreme® Shingles

Table 1 **(Chart continued on next page)**

Contribution to LEED Requirement

LEED Credit Category	LEED Requirement	Owens Corning™ Product Contribution
Energy and Atmosphere (EA)		
Prerequisite 2: Minimum Energy Performance	10% performance improvement for new buildings or 5% better performance for renovated existing buildings, with baseline building performance rating calculated per method in Appendix G of ANSI/ ASHRAE/IESNA Standard 90.1-2007 for whole building simulation.	Owens Corning™ Roofing Products, Duration® Premium Cool Shingles, TruDefinition® Duration,® Oakridge® and Supreme® Shasta White Shingles can help to reduce building energy demand. The project team is responsible for conducting the energy analysis to determine the overall building energy efficiency.
Credit 1: Optimize Energy Performance (1-19 points)	Improve building performance rating compared with the baseline building performance rating, calculated per Appendix G of ANSI/ASHRAE/IESNA Standard 90.1-2007 a whole project simulation model, with points awarded per energy cost savings in LEED table.	Owens Corning™ Roofing Products, Duration® Premium Cool Shingles, TruDefinition® Duration,® Oakridge® and Supreme® Shasta White Shingles can help to reduce building energy demand. The overall contribution depends on the building system or construction assembly where the product is used. The project team is responsible for conducting the energy analysis to determine the overall building energy efficiency.
Credit 2: Construction Waste Management (1-2 points)	Develop and implement a waste management plan, quantifying material diversion by weight (Remember that salvage may include the donation of materials to charitable organizations such as Habitat for Humanity.) Recycle and/or salvage at least 50% (by weight) of construction, demolition, and land clearing waste (1 point) Recycle and/or salvage an additional 25% (75% total by weight) of the construction, demolition, and land clearing debris (1 point)	Owens Corning™ Roofing Preferred Contractor Shingle Recycling Program available in specific markets.

Table 1 **(Continued)**

Contribution to LEED Requirement

LEED Credit Category	LEED Requirement	Owens Corning™ Product Contribution
Materials & Resources (MR)		
Credit 4: Recycled Content (1-2 points)	Materials with recycled content such that the sum of post-consumer recycled content plus ½ of the pre-consumer content constitutes at least 10% (1 point) or 20% (2 points), based on cost, of the total value of the materials in the project.	Owens Corning™ Shingle Products contain varying levels of pre-consumer recycled content, depending on product and manufacture location. See Table 2
Credit 5: Regional Material (1-2 points)	Materials/products extracted and manufactured (or fraction thereof) within 500 miles of project site for a minimum of 10% (1 point) or 20% (2 points), based on cost, of the total materials value (fractional quantities contribute as percentage by weight).	Owens Corning™ Shingle products are made in many locations, providing regionally available product manufactured and sourced within a 500 mile radius of project locations in many areas of the country. Owens Corning™ Roofing plant locations are shown in Fig. 1. Contact 1-800-GET-PINK® for additional information.
Innovation in Design (ID) (1-4 points)	Credit can be achieved through any combination of the Innovation in Design and Exemplary Performance.	Refer to individual product data sheets or check with the local sales representative for product applications.

Note: No individual material enables a credit point to be taken within LEED because each category is dependent on the aggregate of all materials and their proportionate relationship to the total dollar cost of all materials.

Table 2

Manufacturing Facility	Shingles Product	Pre-Consumer Recycle Content Available for LEED NC Credit
Atlanta	Supreme® Shingles	11%
	Oakridge® Shingles	
Brookville	Oakridge® Shingles	7%
	TruDefinition® Duration® Shingles	7%
Medina	Supreme® Shingles	9%
Memphis	Supreme® Shingles	15%
	Oakridge® Shingles	4%
Summit	Supreme® Shingles	20%
	Oakridge® Shingles	8%

Recycled content is a yearly average based on tons of recycled material purchased divided by the nominal square weight times the squares provided.

Figure 1

Owens Corning™ Roofing Shingle Product Plant Locations

To view other Owens Corning™ products that help contribute to LEED certification please visit http://sustainability.owenscorning.com/ and download Pub. No. 10011611.

OWENS CORNING ROOFING AND ASPHALT, LLC
ONE OWENS CORNING PARKWAY
TOLEDO, OHIO 43659

1-800-GET-PINK®
www.owenscorning.com

Pub. No. 10011706-E. Printed in U.S.A. March 2013. The color PINK is a registered trademark of Owens Corning. ©2013 Owens Corning. All Rights Reserved. LEED® is a registered trademark of US Green Building Council.

Standard Product Limited Warranty

on Roofing Shingles

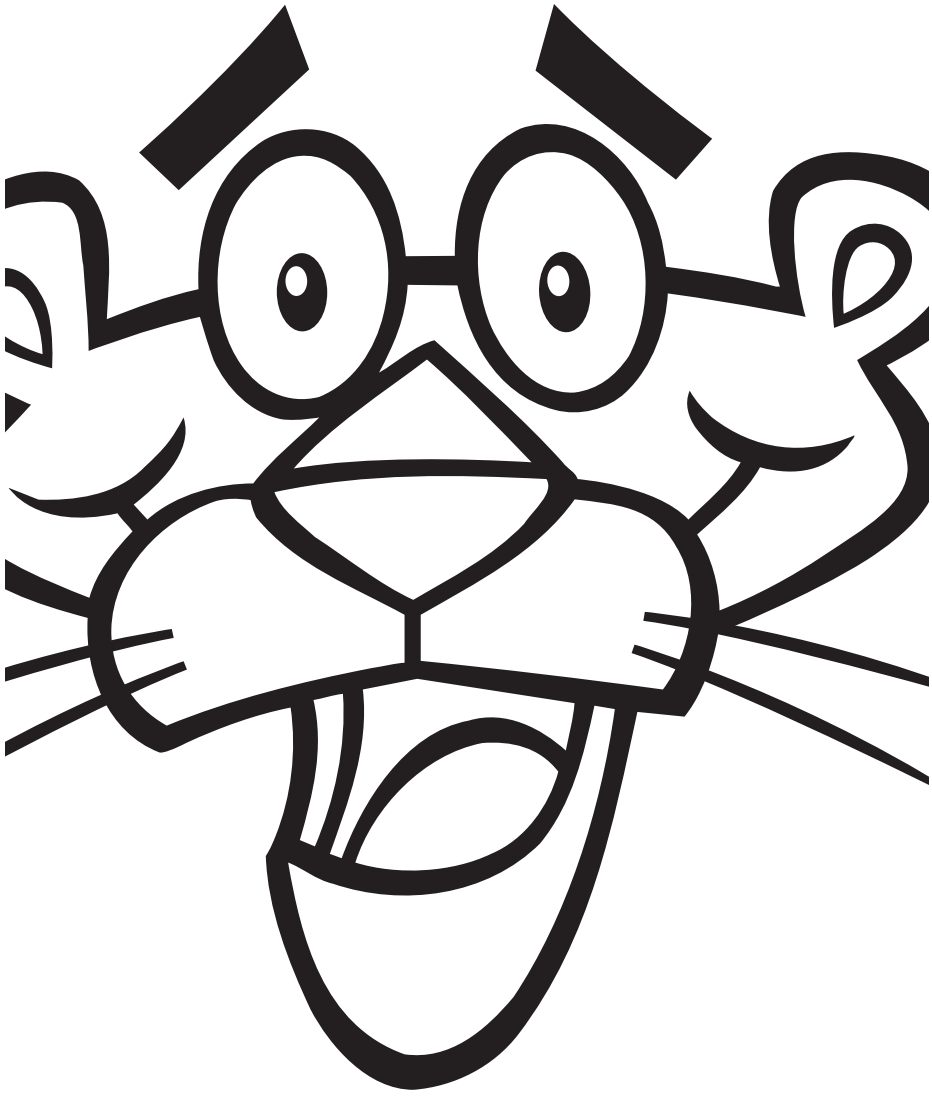

Standard Product Limited

This warranty includes limitations on its trans

THIS WARRANTY GIVES YOU SPECIFIC LEGAL RIGHTS, AND YOU MAY ALSO HAVE OTHER RIGHTS WHICH VARY FROM STATE TO STATE OR PROVINCE TO PROVINCE.

Introduction

Thank you for your recent purchase of Owens Corning® roofing shingles manufactured by Owens Corning Roofing and Asphalt, LLC ("Owens Corning"). We believe we manufacture the highest quality and most attractive shingles available anywhere, and that is why we stand behind them with one of the best warranties in the industry. We have attempted to write this warranty in clear, plain English, so you will fully understand the warranty we are making to you. If anything in this warranty is not clear to you, please call us at 1-800-ROOFING or visit our web site at www.owenscorning.com/roofing.

Who Is Covered

To be entitled to the benefits of this warranty: (1) your property must be located in the United States or Canada and (2) you must be either (a) the original consumer purchaser (the property owner, not the installer or contractor) of one of our shingle products listed in the **"Limited Warranty Information Table"** at the end of this warranty or (b) the first person to whom the original purchaser transfers this warranty along with ownership of the structure on which the shingles are installed (either person described in (a) or (b), "Owner"). (For detail regarding transferring this warranty, please see **"Transferability of This Warranty"** below.)

What Is Covered

We warrant that your Owens Corning® shingles are free from any manufacturing defects that (1) materially affect the shingles' performance on your roof during the *TRU PROtection*® coverage period or (2) cause leaks during the balance of the applicable warranty period after the *TRU PROtection*® coverage period has expired. (To determine the length of the *TRU PROtection*® coverage period and the balance of the applicable warranty period, please see **"How Long Are You Covered"** below and the **"Limited Warranty Information Table"** at the end of this warranty.)

This warranty applies only to those shingles purchased after January 1, 2018 and before the date a later warranty applicable to the shingles comes into effect.

How Long Are You Covered

ALL IMPLIED WARRANTIES APPLICABLE TO YOUR SHINGLES ARE LIMITED IN DURATION TO THE TRU PROTECTION® COVERAGE PERIOD APPLICABLE TO SUCH SHINGLES, AS PROVIDED BY THIS WARRANTY, UNLESS A SHORTER PERIOD IS PERMITTED BY APPLICABLE LAW. SOME STATES OR PROVINCES DO NOT ALLOW LIMITATIONS ON HOW LONG AN IMPLIED WARRANTY LASTS, SO THE ABOVE LIMITATION MAY NOT APPLY TO YOU.

The length of your warranty depends on the type of Owens Corning® shingles you purchased. See the **"Limited Warranty Information Table"** at the end of this warranty for the specific warranty period that applies to your shingles.

1. *TRU PROtection*® Coverage Period—From the installation of the shingles through the *TRU PROtection*® coverage period, Owens Corning will compensate you for the cost, as reasonably determined by Owens Corning, to repair, replace or recover the defective shingles. Owens Corning reserves the right to arrange directly for the repair or replacement of your Products instead of compensating you directly. This compensation is limited as follows:
   A. If Owens Corning decides to replace the shingles, Owens Corning will compensate you only for the cost of replacement Owens Corning® shingles and the labor directly required to replace the defective shingles, both as reasonably determined by Owens Corning.
   B. If Owens Corning decides to repair or recover the shingles, Owens Corning will compensate you only for the cost of the labor directly required to repair or recover the defective shingles as reasonably determined by Owens Corning.
   C. *TRU PROtection*® coverage period does not apply to wind and algae coverage. Please see **"What About Wind Resistance"** and **"What About Algae Resistance"** below for applicable coverage.
2. Prorated Period—Once the *TRU PROtection*® coverage period for the Owens Corning® shingles purchased has expired, the prorated period will begin. During this prorated period, we will provide prorated compensation of

Pub. No. 10013920-L. Printed in U.S.A. January 2018. THE PINK PANTHER™ & © 1964–2018 Metro-Goldwyn-Mayer

Warranty on Roofing Shingles.

ferability.

the cost of the defective Owens Corning® shingles but no other costs (for example, the cost of labor) will be covered. We will prorate the amount of our compensation to you to adjust for the number of years of use you have enjoyed from the original installation date through the date of your claim. For example: If you have a 25-year warranty, and you make your claim anytime in the 15th year of the warranty, our compensation to you will be reduced by 14/25ths of the Owens Corning® shingle cost at the time of purchase. For lifetime shingle coverage (for as long as Owner owns the home on which the shingles are installed), see the **"Limited Lifetime^ Shingle Proration^ Table"**. Owens Corning reserves the right to arrange directly for the repair or replacement of your Products instead of compensating you directly.

3. Other Types of Structures—The coverage for all Owens Corning® shingles offered by this warranty depends on the structure on which the shingles are installed and the owner of the structure. Lifetime coverage for all Owens Corning® shingles applies only to single-family detached homes where the owner of the roof is the resident occupying the home. In the instance of shingles purchased or installed on property owned by others (for example, corporations, governmental agencies, partnerships, trusts, religious organizations, schools, condominiums, homeowners' association, or cooperative housing arrangements) or installed on any other structures (for example, apartment buildings or any other type of building or premises not used by individual homeowners as their residence), the warranty period for lifetime shingles will be 40 years from the original installation date of the shingles, and the *TRU PROtection®* coverage period will be five years. For lifetime shingle coverage (for as long as Owner owns the home on which the shingles are installed), see the **"Limited Lifetime^ Shingle Proration^ Table"**.

Limited Lifetime^ Shingle Proration^ Table

Structure/Owner	TRU PROtection® Period Years 1–10	Prorated Period Years 11–40	Prorated Period Years 41 and Beyond
Single family detached home owned by individuals	100%‡‡	80% reduced by 2% every year thereafter until year 40	20%
Structure/Owner	**Years 1–5**	**Years 6–40**	**Years 41 and Beyond**
Any other types of structures or owners	100%‡‡	87.5%^ reduced by 2.5% every year thereafter until year 40	No coverage

^ For as long as owner owns home.

‡‡ Of costs covered under this warranty.

^ Proration is calculated annually, based on the original installation date. There are no partial year prorations.

4. Exceptions—All of Owens Corning's obligations of compensation under this warranty (whether for repair, replacement, recovery or refunding a prorated portion of the cost of the defective shingles) are subject to the limitations provided by this warranty. Any replacement Owens Corning products will be warranted only for the remainder of the original warranty period. Owens Corning will not provide compensation for any underlayment, metalwork, flashings or other related work, and we will not compensate for the cost to remove or dispose of your shingles.
5. What About Wind Resistance—Your shingles contain asphalt sealant that requires direct warm sunlight for several days ("Thermal Sealing") in order to seal properly. If your shingles are installed during a period of cool weather, they may not adequately seal until the season changes or the weather warms, and if your shingles never receive direct sunlight or are not exposed to adequate surface temperatures, they may never achieve Thermal Sealing. Prior to your shingles achieving Thermal Sealing, your shingles are more vulnerable to blow-offs and wind damage. This is the fundamental nature of shingles and not a manufacturing defect, and we are not responsible for any blow-offs or wind damage that might occur prior to Thermal Sealing having occurred. After your shingles have achieved Thermal Sealing, however, they will be covered under this warranty if they experience blow-offs or wind damage in winds (including gusts) up to the levels and for the period from the original installation date ("Wind Warranty Period") listed in the **"Limited Warranty Information Table"** at the end of this warranty.

   HOWEVER, THE COVERAGE AGAINST SHINGLE BLOW-OFFS OR WIND DAMAGE IS IN EFFECT FOR A PERIOD OF 15 YEARS FOR LIFETIME SHINGLES AND FIVE YEARS FOR ALL OTHER SHINGLES FROM THE ORIGINAL DATE OF INSTALLATION.

Studios Inc. All Rights Reserved. The color PINK is a registered trademark of Owens Corning. © 2018 Owens Corning. All Rights Rese

Owens Corning will be liable only for the reasonable cost of replacing blown-off shingles (to include material and labor during the applicable *TRU PROtection*® warranty period) and the reasonable cost of manually sealing the unsealed shingles remaining on the roof.

Owens Corning is not responsible where the damage or blow offs are caused by damage to the underlying structure.

6. What About Algae Resistance—If the shingles that you purchased were not specifically labeled as "Algae Resistant" ("AR"), then any discoloration caused due to algae is not covered by this warranty as explained in **"What Is Not Covered"** below. However, if you did purchase AR shingles, they are covered for the period described in the **"Limited Warranty Information Table"** at the end of this warranty following the date of installation ("AR Warranty Period") against brown-black staining caused due to growth of cyanobacteria Gloeocapsa magma algae. We do not cover the effects of other growth, such as mold, lichen and green algae. If brown-black staining occurs during the AR Warranty Period, you will be entitled to the following remedy:
   A. Remedy for Algae Growth—If your AR shingles are discolored due to cyanobacteria algae growth during the first year of the AR Warranty Period, we will compensate you for the cost, including labor (such cost not to exceed the initial cost of the AR shingles plus the initial cost of installation), as reasonably determined by Owens Corning, to repair, replace or recover the affected AR shingles. For purposes of this AR shingle warranty, the term "repair" as used above refers to cleaning or otherwise removing any algae growth from affected AR shingles. Decisions regarding whether your AR shingles should be repaired, replaced or recovered will be made solely by Owens Corning.
   B. Proration—If your AR shingles have been installed longer than 1 year, labor will not be covered, and our compensation will be limited to a prorated amount of the original purchase price of the affected AR shingles. We will prorate your compensation to take into account the number of full years of use that you have enjoyed from the original installation date through the date of your claim. For example: If you make your claim anytime in the 4th year of the AR warranty and the AR Warranty Period is 10 years, our compensation to you will be in the amount of the original purchase price of the affected AR shingles, reduced by 3/10ths of the original purchase price of the affected AR shingles.

Transferability of This Warranty (Note: Based on Original Installation Date)

This warranty is not transferable except as follows: You may only transfer this warranty 1 time, anytime during the life of the warranty, to the purchaser of the structure on which the shingles are installed. For this warranty to transfer and the second Owner to obtain the benefits of this warranty, the second Owner must, within 60 days after the date of the real estate transfer, contact 1-800-ROOFING and submit together: (1) proof of purchase of the Owens Corning® shingles, and (2) the installation date and ownership history.

1. If the transfer takes place within the *TRU PROtection*® coverage period (see the **"Limited Warranty Information Table"**), the second Owner is entitled to the same coverage as the original Owner.
2. If the transfer occurs after the *TRU PROtection*® coverage period (see the **"Limited Warranty Information Table"**), the balance of the warranty period (other than the AR Warranty Period and Wind Warranty Period) will automatically be reduced to a 2-year period after the date of ownership change. If there is a manufacturing defect that causes leaks during this 2-year period, our compensation to the second Owner will be based only on the original cost of the defective shingles reduced by the amount of use the second Owner and the original Owner have enjoyed from the original installation date through the date of your claim.
3. The AR Warranty Period and Wind Warranty Period are fully transferrable. The second Owner will receive the balance of the coverage outlined in the **"Limited Warranty Information Table"** based upon the original installation date.

What Is Not Covered

Our warranty does not cover damage to the Owens Corning® shingles due to any cause not expressly covered in this warranty. After our shingles leave our manufacturing facility, they are subjected to conditions and handling beyond our control that could affect their performance. This warranty does not cover any problems with non-defective shingles caused by conditions or handling beyond our control. Some examples of conditions not covered by this warranty include:

erved.

1. Acts of God, such as hail, strong storms or winds (including gusts) over the maximum wind speed listed in the **"Limited Warranty Information Table"** at the end of this warranty, ice damming above the area covered by leak barriers or flashings or snow or water infiltration through exhaust vents.
2. Damage to or failure of the shingles as a result of damage to or the failure of the underlying roofing structure, or failure and/or rusting of roof nails.
3. Foot traffic on your roof or damage caused by objects (e.g., tree branches) falling on your roof.
4. Improper or faulty installation of your shingles—installation must be in accordance with our written installation instructions and comply with local building codes.
5. Shading, variations in the color of your shingles or discoloration caused by algae, fungi, lichen or cyanobacteria (unless covered under the section **"What About Algae Resistance"** above).
6. Damage caused by improper or inadequate roof ventilation or roof drainage, unvented attics or enclosed roof rafter assemblies. Some exceptions may apply. If you have questions, please contact us at 1-800-ROOFING.
7. Settlement of the structure of your property or buckling or cracking of the deck over which your shingles are installed.
8. Leaks caused by pre-existing conditions, structural failures or damaged areas on or near the roof that are not part of the roofing system, such as chimneys that have loose or cracked mortar, skylight seams or soil pipe boots that allow water to enter the structure or roofing system.
9. Damage to the shingles caused by alterations made after completion of application, including structural changes, equipment installation, power washing, painting or the application of cleaning solutions, coatings, or other modifications.
10. Any damage due to debris, resins or drippings from foliage.
11. Improper storage, handling or other conditions beyond our control.
12. Damages caused by, or the cost to repair or replace, any non-Owens Corning® shingles.
13. Improperly designed or installed gutter or downspout systems.
14. Any costs that you incur that are not authorized in advance by Owens Corning.

Replacement Shingle Variations

As a result of our ongoing efforts to improve and enhance our shingle product line, we must reserve the right to discontinue or modify our shingles, including their colors. We are not liable to you if you make a warranty claim in the future and any replacement shingles you receive vary in color either because of normal weathering or changes in our product line. You should understand that if we replace any of your shingles under this warranty, we reserve the right to provide you with substitute shingles that are comparable only in quality and price to your original shingles.

Compensation

Under the terms of this warranty, the manner of compensation is at Owens Corning's sole discretion and may be arranged by Owens Corning directly or issued in the form of cash settlement or material credit for Owens Corning® products to an existing supplier of Owens Corning® roofing materials. All costs must be pre-approved by Owens Corning.

Claims Process & Right of Inspection

To make a claim under this warranty, you must do so within 30 days after you discover the problem. To fully evaluate your claim, we may ask you to provide, at your expense, pictures of your shingles or shingle samples for us to test. You must do so in order to be eligible to make a claim under this warranty. To make a claim or if you have any questions, call us at 1-800-ROOFING or visit us at www.owenscorning.com/roofing. If you repair or replace your Owens Corning products before Owens Corning has made a determination on your claim, your claim may be denied. Owens Corning shall have a reasonable time after notification of a claim to inspect the roof. If requested by Owens Corning, the owner shall provide Owens Corning with reasonable access to the roof, during normal business hours, for the purpose of conducting an inspection of the roofing products.

No Modifications to This Warranty

The terms of this warranty may not be waived or modified (whether by a statement, omission, course of dealing or any act), except by a writing signed by an officer of Owens Corning or a licensed attorney in the Owens Corning legal department or

by the Owens Corning Technical Inspection Leader. Other than such an officer, attorney or technical inspection leader, nobody (regardless of whether an Owens Corning employee, a contractor, an installer or otherwise) has authority to act on behalf of Owens Corning (for example to waive or modify this warranty, to make representations or warranties or to undertake any liability). This warranty represents the entire agreement between the parties and replaces all other communications, warranties, representations and guarantees.

Mandatory Arbitration

To the extent permitted by applicable law, Owens Corning and you agree to arbitrate all disputes and claims arising out of or relating to this warranty or Owens Corning® shingles ("Dispute"). This warranty evidences a transaction in interstate commerce, and the Federal Arbitration Act governs the interpretation and enforcement of this provision. A party who intends to seek arbitration must first send to the other, by certified mail, a written notice of intent to arbitrate ("Notice"). The Notice to Owens Corning should be addressed to: One Owens Corning Parkway, Toledo, Ohio 43659 ("Arbitration Notice Address"). The Notice must (a) describe the nature and basis of the claim or dispute; and (b) set forth the specific relief sought ("Demand"). If the parties do not reach an agreement to resolve the claim within 30 days after Notice is received, you or Owens Corning may commence an arbitration proceeding. All issues are for the arbitrator to decide, including the scope of this arbitration clause, but the arbitrator is bound by the terms of this warranty. The arbitration shall be governed by the Commercial Dispute Resolution Procedures and the Supplementary Procedures for Consumer Related Disputes (collectively, "AAA Rules") of the American Arbitration Association ("AAA"), as modified by this warranty, and shall be administered by the AAA.

YOU AND OWENS CORNING HEREBY WAIVE THE RIGHT TO A TRIAL BY JURY.

The arbitrator may award injunctive relief only in favor of the individual party seeking relief and only to the extent necessary to provide relief warranted by that party's individual claim.

YOU AND OWENS CORNING MAY BRING CLAIMS AGAINST THE OTHER ONLY IN EACH PARTY'S INDIVIDUAL CAPACITY, AND NOT AS A PLAINTIFF OR CLASS MEMBER IN ANY PURPORTED CLASS OR REPRESENTATIVE PROCEEDING.

Further, you agree that the arbitrator may not consolidate proceedings of more than one person's claims, and may not otherwise preside over any form of a representative or class proceeding.

Governing Law and Forum

This warranty and all Disputes are governed by United States Federal laws and laws of Ohio. Subject to the "Arbitration" provision in this warranty, if there are any Disputes that cannot be arbitrated, then the parties consent to the exclusive jurisdiction and venue of the state and federal courts in Ohio with respect to such Disputes.

Savings and Severability

To the extent that this warranty is inconsistent with applicable law, this warranty is hereby modified to be consistent with such applicable law. If an arbitrator or court determines that any term in this warranty is illegal or unenforceable, the parties intend for the arbitrator or court to interpret or modify this warranty to effect the original intent of the parties as closely as possible while rendering the term and this warranty fully legal and enforceable. If a term in this warranty cannot be rendered legal and enforceable accordingly, the parties intend for the arbitrator or court to sever the illegal or unenforceable term from this warranty, leaving the remainder of this warranty enforceable.

Limitations

THIS WARRANTY IS YOUR EXCLUSIVE WARRANTY FROM OWENS CORNING AND REPRESENTS THE SOLE REMEDY TO ANY OWNER OF OWENS CORNING® SHINGLES. OWENS CORNING MAKES NO OTHER REPRESENTATIONS, WARRANTIES OR GUARANTEES OF ANY KIND OTHER THAN THOSE STATED EXPLICITLY IN THIS WARRANTY.

YOUR REMEDY FOR DEFECTIVE SHINGLES IS FULLY DESCRIBED IN THE ABOVE SECTION, **"HOW LONG ARE YOU COVERED"**. YOU ARE NOT ENTITLED TO ANYTHING MORE THAN WHAT IS DESCRIBED IN THAT SECTION UNLESS OTHERWISE COVERED BY AN OPTIONAL OWENS CORNING ENHANCED WARRANTY. OWENS CORNING HAS NO REASON TO KNOW ANY PARTICULAR PURPOSE FOR WHICH YOU ARE BUYING SHINGLES.

OWENS CORNING IS NOT RESPONSIBLE FOR ANY INCIDENTAL, CONSEQUENTIAL, SPECIAL, PUNITIVE, OR OTHER DAMAGES OF ANY KIND, INCLUDING DAMAGE TO YOUR STRUCTURE OR TO YOUR STRUCTURE'S CONTENTS, WHETHER FOR BREACH OF THIS WARRANTY, NEGLIGENCE, STRICT LIABILITY OR OTHER CLAIMS DERIVED IN TORT OR FOR ANY OTHER CAUSE.

SOME STATES OR PROVINCES DO NOT ALLOW THE EXCLUSION OR LIMITATION OF INCIDENTAL OR CONSEQUENTIAL DAMAGES, SO THE ABOVE LIMITATION OR EXCLUSION MAY NOT APPLY TO YOU.

FOR CANADA ONLY — The terms in this warranty, except to the extent lawfully permitted, do not exclude, restrict, or modify but are in addition to any provincial laws.

Limited Warranty Information Table

	Warranty Length	TRU PROtection® Coverage Period	Wind Warranty Protection	Wind Warranty Period	AR[1] Warranty Period
Berkshire®†	Lifetime[Δ]	10 YRS	130 MPH	15 YRS	15 YRS
Devonshire®	Lifetime[Δ]	10 YRS	130 MPH	15 YRS	10 YRS
Woodmoor®	Lifetime[Δ]	10 YRS	110/130 MPH**	15 YRS	10 YRS
Woodcrest®	Lifetime[Δ]	10 YRS	110/130 MPH**	15 YRS	10 YRS
WeatherGuard® HP†	Lifetime[Δ]	10 YRS	110/130 MPH***	15 YRS	10 YRS
Duration® Series††	Lifetime[Δ]	10 YRS	130 MPH	15 YRS	10 YRS
Oakridge®†††	Lifetime[Δ]	10 YRS	110/130 MPH***	15 YRS	10 YRS
Supreme®	25 YRS	5 YRS	60 MPH	5 YRS	10 YRS
Classic®	20 YRS	3 YRS	60 MPH	5 YRS	

[Δ] For as long as owner owns home.

† Berkshire® Hip & Ridge is required for 15-year Algae Resistance Limited Warranty.

†† Includes TruDefinition® Duration®, TruDefinition® Duration STORM®,‡ TruDefinition® Duration® Designer Colors Collection, TruDefinition® Duration MAX®, TruDefinition® Duration® COOL, Duration® Premium Cool and Duration® Premium shingles.

††† Includes TruDefinition® Oakridge® Shingles.

‡ WeatherGuard® HP Shingles require WeatherGuard® HP Hip & Ridge Shingles and TruDefinition® Duration STORM® Shingles require ProEdge STORM® Hip & Ridge Shingles to complete a UL 2218, Class IV impact-resistant roof system.

** 130 MPH is applicable only with Owens Corning® Starter Shingle products application along eaves and rakes in accordance with installation instructions.

*** 110 MPH is standard with 4-nail application. 130 MPH is applicable only with 6-nail application and Owens Corning® Starter Shingle products application along eaves and rakes in accordance with installation instructions.

1 AR is available regionally. Visit www.owenscorning.com/roofing for availability in your zip code.

NOTE: When properly installed, Owens Corning® Hip & Ridge shingle warranty terms will match with the corresponding roofing shingle. (See specific Owens Corning® Hip & Ridge shingle installation instructions for details.)

Name of Contractor _____ Date of Installation _____

Address _____

City _____ State _____ ZIP _____

Phone Number _____

Warranty Registration & Transfer Information

TO REGISTER THIS WARRANTY:

Visit our website at:
http://www.owenscorning.com/roofing/warranty-101
Click on Register a Standard Product Limited Warranty

The following information is required for registration:

Original Installation Date _____

Original Purchaser's Name _____

Owens Corning® Shingle Name/Color Installed _____

Number of Squares Installed _____

Address of Property _____

_____

_____

Note: *Please retain proof of purchase and installation date with your important records in the event that you choose to transfer this warranty in the future, or upload these documents as you register this warranty online.*

TO TRANSFER THIS WARRANTY:

See **TRANSFERABILITY OF THIS WARRANTY** for exceptions.

Contact 1-800-ROOFING

For this warranty to be transferred, the second Owner must contact 1-800-ROOFING within sixty (60) days after the date of the real estate transfer to obtain the benefits of this warranty. And must have the following:

(1) Proof of purchase of the Owens Corning® Roofing System and

(2) The installation date and ownership history

For more information, call 1-800-GET-PINK® or visit our website at: www.owenscorning.com/roofing.

©2018 Owens Corning. All Rights Reserved.

OWENS CORNING
ROOFING AND ASPHALT, LLC
ONE OWENS CORNING PARKWAY
TOLEDO, OHIO, USA 43659

1-800-GET-PINK®
www.owenscorning.com/roofing

Pub. No. 10013920-L. Printed in U.S.A. January 2018.
THE PINK PANTHER™ & © 1964–2018 Metro-Goldwyn-Mayer Studios Inc. All Rights Reserved. The color PINK is a registered trademark of Owens Corning. © 2018 Owens Corning. All Rights Reserved.

OWENS CORNING®
INNOVATIONS FOR LIVING®

Oakridge® Shingles

featuring *Artisan Colors*

Oakridge® Artisan Color
Flagstone†

Oakridge® Shingles

Make it your own.

When does a house become a home? When the place you live in begins to reflect the life you're living. When every change, both big and small, makes it more and more your own. Choosing a new roof is your opportunity to make a major impact on the look of your home – and we're here to help. Owens Corning has been a leader in the building materials industry for over 70 years. So you can be confident that your new roof will enhance and help protect your home for years to come.

The Right Choice.™

Oakridge® Shingles are The Right Choice™ for long-lasting performance and striking beauty. In addition to a wide range of inviting, popular colors, they also offer:

- Limited Lifetime Warranty*/‡ (for as long as you own your home)
- 110-/130**-MPH Wind Resistance Limited Warranty*
- Algae Resistance Limited Warranty*

Oakridge®

Artisan Colors

At Owens Corning Roofing, we're always looking for ways to help you express your sense of style through your home, which is why we've expanded the Oakridge® color palette with these inspiring selections.

Your home is your canvas.

Oakridge® Artisan Colors are specially designed to provide a unique blend of artistry and craftsmanship that will give your home a look that is anything but ordinary. Blacks and grays are rich and warm, earth tones capture the vibrancy of nature's brightest hues, and bold color combinations help enhance a wide variety of exterior accents and landscaping. Plus, every Oakridge® Artisan Color features greater contrast and color depth to add drama and curb appeal to your entire home.

Oakridge® Artisan Color
Aged Cedar†

Traditional favorites that feel like home.

Oakridge® Color Availability

Amber†
Not Available in Service Area 8 or 11 (see map).

Onyx Black†

Desert Tan†

Estate Gray†

Brownwood†

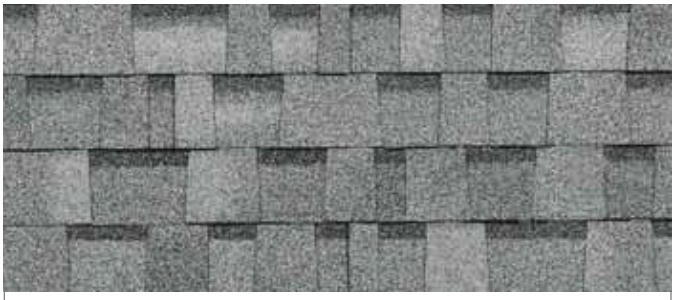

Sierra Gray†
Not Available in Service Area 8 or 11 (see map).

Teak†

Shasta White†

Driftwood†

Chateau Green†

Oakridge® Artisan Color
Peppermill Gray†

Enhanced colors and bold designs.

Oakridge® Artisan Colors

Aged Cedar†

Sand Castle†

Flagstone†

Twilight Black†

Peppermill Gray†

Color Availability Map

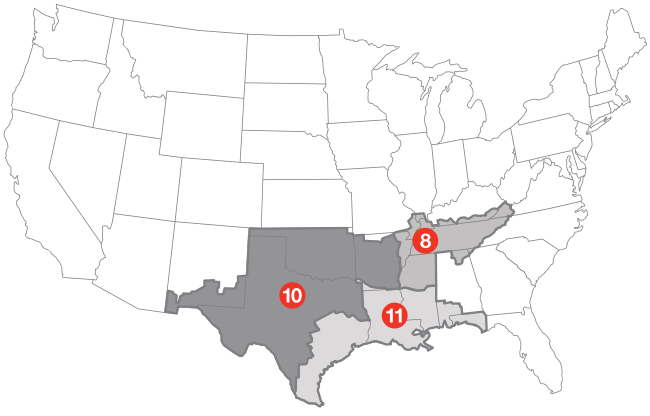

ENERGY STAR® is for roofs too.

Similar to the energy-efficient appliances in your home, roofing products can provide energy-saving qualities. Owens Corning™ Oakridge® Roofing Shingles in Shasta White can help reduce your energy bills when installed properly. These shingles reflect solar energy, decreasing the amount of heat transferred to a home's interior – and the amount of air conditioning needed to keep it comfortable. Actual savings will vary based on geographic location and individual building characteristics. Call 1-800-GET-PINK® or 1-888-STAR-YES for more information.

Product Attributes

Warranty Length*

Limited Lifetime‡ (for as long as you own your home)

Wind Resistance Limited Warranty*

110/130** MPH

Algae Resistance Limited Warranty*

10 Years

Tru PROtection® Non-Prorated Limited Warranty* Period

10 Years

Oakridge® Shingles Product Specifications

Nominal Size	13¼" x 39⅜"
Exposure	5⅝"
Shingles per Square	64
Bundles per Square	3
Coverage per Square	98.4 sq. ft.

Applicable Standards and Codes

ASTM E 108, Class A Fire	ASTM D 3462
ASTM D 3161, Class F Wind	ASTM D 228
ASTM D 7158, Class H Wind	UL 790, Class A
ASTM D 3018, Type 1	

The perfect finishing touch.

Owens Corning™ Roofing Hip & Ridge Shingles do more than just deliver added protection to the most vulnerable areas of your roof – they enhance the roofline and help define the character of your entire home.

Don't accept a generic substitute. Be sure to choose the right Owens Corning™ Roofing Hip & Ridge style and specially matched color to provide the perfect finishing touch to your new roof.

Oakridge®
Desert Tan†

Total Protection Roofing System™[1]

Working together to help protect and enhance your home.

It takes more than just shingles to protect your home. The Total Protection Roofing System™[1] is made up of all the essential Owens Corning™ Roofing components and layers that are designed to work together to maximize your roof's performance and durability. High-quality shingles and underlayment products help guard against the weather outside, while ventilation products help balance air flow to control temperature and humidity inside the attic.

The Total Protection Roofing System™[1] is designed to give you the assurance that all of your Owens Corning™ Roofing components are working together to maximize the performance of your new roof – and to enhance the comfort and enjoyment of those who live beneath it.

a VentSure® Ventilation Products
Help protect a roof from premature failure by helping remove heat and moisture from the attic.

b PINK® Fiberglas™ Blown-In Insulation
Tiny air pockets trapped in the insulation resist the passage of heat flow.

c Owens Corning™ Hip & Ridge Shingles
Help protect the ridge vent and add an attractive, finished look to a roof's hips and ridges.

d Owens Corning™ Shingles
Add durable beauty to a home. Shingles are the first line of defense against the elements.

e Owens Corning™ Underlayment Products
Add an extra layer of protection between the shingles and the roof deck to help prevent damage from wind-driven rain.

f WeatherLock® Self-Sealing Ice & Water Barrier Products
Help guard vulnerable areas where water can do the most damage to a roof: eaves, valleys, dormers and skylights.

g Owens Corning™ Starter Shingle Products
The first step in the proper installation of shingles.

h Owens Corning™ Undereave Ventilation Products
Help prevent moisture buildup in the attic by working with ridge vents to keep air moving.

i Illuminator™ Tube Skylight
A smart choice for bringing natural light into the home.

1 Excludes non-Owens Corning™ Roofing Products such as flashing, fasteners and wood decking.

Home sweet home.

Owens Corning Roofing wants to help make your purchase of a new roof a positive experience. Not only can we help you choose the right shingle and roofing system components, but we can also help you select the right contractor for the job. Don't worry – we know this is a big decision. We're here to help you feel confident about choosing our roofing products. After all, we're America's #1 roofing brand[2] for a reason.

Oakridge® Artisan Color
Flagstone†

Want design assistance or more information about Owens Corning™ Roofing products? Or want to find an Owens Corning™ Roofing Preferred Contractor network member?

It's easy to reach us:

1-800-GET-PINK®
www.roofing.owenscorning.com

* See actual warranty for complete details, limitations and requirements.

** 130 MPH is applicable only with 6-nail application and Owens Corning™ Starter Shingle product application in eaves and rakes in accordance with installation instructions.

† Owens Corning strives to accurately reproduce photographs of shingles. Due to manufacturing variances, the limitations of the printing process and the variations in natural lighting, actual shingle colors and granule blends may vary from the photo. The pitch of your roof can also impact how a shingle looks on your home. We suggest that you view a roofing display or several shingles to get a better idea of the actual color. To accurately judge your shingle and color choice, we recommend that you view it on an actual roof with a pitch similar to your own roof prior to making your final selection. Color availability subject to change without notice. Ask your professional roofing contractor for samples of colors available in your area.

‡ 40-year Limited Warranty on commercial projects.

2 Based on *2011 Roofing Brand Awareness Survey* by Owens Corning Roofing & Asphalt LLC.

ENERGY STAR and the ENERGY STAR mark are registered trademarks of the U.S. Environmental Protection Agency.

OWENS CORNING
ROOFING AND ASPHALT, LLC
ONE OWENS CORNING PARKWAY
TOLEDO, OHIO, USA 43659

1-800-GET-PINK®
www.roofing.owenscorning.com

Pub. No. 10017747. Printed in U.S.A. November 2012. THE PINK PANTHER™ & © 1964–2012 Metro-Goldwyn-Mayer Studios Inc. All Rights Reserved. The color PINK is a registered trademark of Owens Corning. © 2012 Owens Corning. All Rights Reserved.

Owens Corning™ Roofing Preferred Contractors are independent contractors and are neither affiliates nor agents of Owens Corning Roofing & Asphalt , LLC, or its affiliated companies.

(Houston, Irving, Memphis)

"Let the fresh air in and keep the pests out!"

The Bug Blocker® Industrial Screen Door Engineering Specifications

Print This Page (industrial-screen-door-engineering-specs)

To Provide a Bug Blocker® Industrial Screen Door for both ventilation and security. The industrial screen door is to be retrofitted into existing doorways and use 304 Stainless Steel Screen to withstand the industrial environment.

Specifications:

Under normal circumstances the door shall be under 4' wide and 14' tall. There will be a kick plate for the bottom, perimeter seal for the two sides and top, one handle and a bottom brush seal. There is a choice of piano hinge or spring loaded hinges.

Frame:

The frame shall be aluminum alloy 6063-T6 mill finish, with stainless steel screen permanently attached. Frames shall be aluminum extrusion, and shall be 1" x 1-1/4" wide with internal steel corners and 3/16" pins.

Screen:

The screening shall be 304 stainless steel in either of the following configurations:

	Mesh	Wire Diameter	Opening Size	Free Area
Standard	12x12	0.023″	0.0603 in. sq.	51.8%
Fine	30x30	0.011″	0.0223 in. sq.	44.8%

MEETS FEDERAL SPECIFICATION STANDARD A-A-1037B DATED APRIL 19, 1990 FOR TYPE I, CLASS I WIRE FABRIC.

MEETS THE ASTM STANDARD SPECIFICATION FOR INDUSTRIAL WIRE CLOTH AND SCREENS, DESIGNATION E 437-85.(Revised 5/2010)

The screen shall be the Bug Blocker® as produced by Rasco Industries, Inc. or approved equal.

Interested in learning more about our security screens and bird screen (service-door-inserts) products? Watch our product videos (product-videos) or contact us (contact-us) today and we will be happy to provide you more information about the overhead security doors (overhead-screen) we offer.

(quote-order-survey-forms)

Survey Forms

Overhead Screen Door (overhead-screen)

Chain-Link Security Door (chainlink-security)

Service Door Screen Insert (service-door-inserts)

Behind Rolling Screen Door (behind-rolling-steel)

Expanded Metal Security Door (expanded-metal)

Fixed-In-the-Opening Screen Panels (fixed-in-the-opening-screen-panels)

Air Inlet / Louver Screen Panel (air-inlet-screen)

Industrial Screen Door (industrial-screen-door)

Security & Food Safety Standards (food-safety-standards)

Product Videos (product-videos)

Concession Stand (concession-stand)

Installation Instructions (installation-instructions)

Bird & Rodent Solutions (bird-rodent-blocking)

Dealer Section (dealer)

©2018 Rasco Industries, Inc. | 5310 Shoreline Drive, Mound MN 55364 | Phone: 800.537.3802 or 763.479.1144 | Fax: 763.479.1147 or 952.283.1261

Terms and Conditions (https://www.bugblocker.com/terms-and-conditions) | Site Created By: Ecreativeworks (https://www.ecreativeworks.com/)

UL Evaluation Report

UL ER2453-01

Issued: August 2, 2013
Revised: January 30, 2015

Visit UL's On-Line Certifications Directory: www.ul.com/erdirectory
for current status of Report.

UL Category Code: ULEZ

CSI MasterFormat®
DIVISION: 07 00 00 – THERMAL AND MOISTURE PROTECTION
Sub-level 2: 07 30 00 – Steep Slope Roofing
Sub-level 3: 07 31 00 – Shingles and Shakes
Sub-level 4: 07 31 13 – Asphalt Shingles

COMPANY:

OWENS CORNING
ONE OWENS CORNING PKY
TOLEDO, OH 43659
(419) 248-7060
http://www.owenscorning.com/

1. SUBJECT: Asphalt Shingles

CLASSIC®, SUPREME®

DURATION® PREMIUM, TRUDEFINITION® DURATION®, TRUDEFINITION® DURATION® STORM™, TRUDEFINITION® DURATION® MAX™, TRUDEFINITION® OAKRIDGE®, OAKRIDGE®, WOODCREST®, WOODMOOR®, TRUDEFINITION® WEATHERGUARD® HP, BERKSHIRE®, DEVONSHIRE™

WOODSTART® STARTER SHINGLE, STARTER STRIP PLUS, STARTER STRIP SHINGLE, AND TRI BUILT STARTER STRIP

BERKSHIRE® HIP & RIDGE SHINGLES, HIGH RIDGE HIP & RIDGE SHINGLES WITH SEALANT, RIZERIDGE® HIP & RIDGE SHINGLES WITH SEALANT, WEATHERGUARD® HP HIP & RIDGE SHINGLES, PROEDGE®, DURARIDGE™ HIP & RIDGE SHINGLES AND PROEDGE® STORM® HIP & RIDGE SHINGLES

2. SCOPE OF EVALUATION

- 2012, 2009, and 2006 *International Building Code* ® (IBC)
- 2012, 2009, and 2006 *International Residential Code* ® (IRC)
- ICC ES Acceptance Criteria for Quality Documentation (AC10), Dated December 2012
- ICC ES Acceptance Criteria for Alternative Asphalt Roofing Shingles (AC438), Dated March 2012

The products were evaluated for the following properties:

- External Fire Exposure (ANSI/UL790, ASTM E108)
- Wind Resistance (ASTM D3161; ASTM D7158)
- Physical Properties (ASTM D3462, ICC-ES AC438)

3. REFERENCED DOCUMENTS

- ANSI/UL790 (ASTM E108), Standard Test Methods for Fire Tests of Roof Coverings
- ASTM D3161, Standard Test Method for Wind-Resistance of Steep Slope Roofing Products (Fan-Induced Method)
- ASTM D7158, Standard Test Method for Wind Resistance of Asphalt Shingles (Uplift Force/Uplift Resistance Method)
- ASTM D3462, Standard Specification for Asphalt Shingles Made from Glass Felt and Surfaced with Mineral Granules
- UL Subject 2375, Outline of Investigation for Hip and Ridge Shingles (UL Fire and Wind Tests)
- ICC-ES Acceptance Criteria for Alternative Asphalt Roofing Shingles (AC438), Dated March 2012

4. USES

OWENS CORNING asphalt shingles are used as roof coverings for new and existing roofs.

5. PRODUCT DESCRIPTION

OWENS CORNING asphalt shingles are roof covering materials complying with the following properties when installed as described in this report and as shown in illustrations for application instructions which accompany each bundle of shingles. The products are three-tab shingles, laminated shingles and hip & ridge shingles. The products are available in standard and metric sizes.

Fire Classification: OWENS CORNING asphalt shingles covered under this Report have been tested for fire classification Class A in accordance with UL790 (ASTM E108). Shingles tested in accordance with UL790 (ASTM E108) qualify for use under Section 1505.1 of the 2012, 2009 and 2006 IBC and Section R902.1 of the 2012, 2009 and 2006 IRC.

Wind Resistance: OWENS CORNING asphalt shingles covered under this Report have been tested for wind resistance in accordance with ASTM D3161 or ASTM D7158.

Shingles tested in accordance with ASTM D3161 are classified as Class F or Class A and qualify for use under the exception to Section 1507.2.7.1 of the 2012, 2009 and 2006 IBC, or the exception to Section R905.2.4.1 of the 2012, 2009 and 2006 IRC.

Shingles tested in accordance with ASTM D7158 are classified as Class H and qualify for use in locations as shown in Table 1507.2.7.1 of the 2012 and 2009 IBC or Table R905.2.4.1 of the 2012 and 2009 IRC, where the maximum basic wind speed is 150 mph (67 m/s) or less with exposure category of B or C (ASCE 7) and a maximum building height of 60 feet (18.3 m). Installation must be in accordance with Section 1507.2.7 of the 2012, 2009 and 2006 IBC or Section R905.2.6 of the 2012, 2009 and 2006 IRC, as applicable.

Physical Properties: OWENS CORNING asphalt shingles covered under this Report have been tested for physical properties in accordance with ASTM D3462. Shingles tested in accordance with ASTM D3462 qualify for use under Section 1507.2.5 of the 2012, 2009 and 2006 IBC or Section R905.2.4 of the 2012, 2009 and 2006 IRC. Shingles have also been evaluated in accordance with ICC-ES Acceptance Criteria, AC438. When installed on new construction in accordance with this report and the OWENS CORNING installation instructions, the shingles are a Class A fire classification roof covering. When the shingles are installed over existing roof coverings, the fire classification is maintained.

5.1 Three-Tab Shingles – Classic®, and Supreme®:

Classic® and Supreme® shingles are three-tab shingles manufactured with a single fiberglass mat, coated on both sides with asphalt, and surfaced on the weather-exposed side with mineral granules. The shingles are self-sealing and have a continuous bead of thermal-tab sealing adhesive above the shingle butt on the weather side. The shingles are self-sealing and have a dashed bead of thermal-tab sealing adhesive above the shingle butt on the weather side.

5.2 Five-Tab Shingles - Devonshire™

Devonshire™ shingles are five-tab shingles manufactured with a single fiberglass mat, coated on both sides with asphalt, and surfaced on the weather-exposed side with mineral granules. The shingles are self-sealing and have a dashed bead of thermal-tab sealing adhesive above the shingle butt on the weather side.

5.3 Laminated Shingles – Duration® Premium, TruDefinition® Duration®, TruDefinition® Duration® Storm, TruDefinition® Duration® MAX, TruDefinition® Oakridge®, Oakridge®, Woodcrest®, Woodmoor®, TruDefinition® WeatherGuard® HP, Berkshire®:

Duration® Premium, TruDefinition® Duration®, TruDefinition® Duration® Storm, TruDefinition® Duration® MAX, Oakridge®, Woodcrest®, Woodmoor®, TruDefinition® WeatherGuard® HP, Berkshire® shingles are laminated shingles manufactured with 2 layers of fiberglass mat coated with asphalt on both sides, and surfaced on the weather-exposed side with mineral granules.

5.4 Hip & Ridge Shingles – Berkshire® Hip & Ridge Shingles, High Ridge Hip & Ridge with Sealant, ProEdge®, ProEdge® Storm®, WeatherGuard® HP, DuraRidge™ Hip and Ridge Shingles, and RIZERidge® Hip and Ridge shingles with Sealant:

Berkshire® Hip & Ridge Shingles, High Ridge Hip and Ridge Shingles with Sealant, ProEdge®, ProEdge Storm™, WeatherGuard® HP, DuraRidge™ Hip and Ridge Shingles and RIZERidge® Hip and Ridge shingles with Sealant are prefabricated hip and ridge shingles. ProEdge Storm™ and WeatherGuard® HP hip and ridge shingles are perforated so they can be torn into three 12 inch by 12 inch (305 mm by 305 mm) shingles. ProEdge® hip and ridge shingles and RIZERidge® Hip and Ridge shingles with Sealant are perforated so they can be torn into three 12 inch by 12 inch (305 mm by 305 mm) shingles for standard , or four 13-¼ inch by 9-$^{27}/_{32}$ inch (337 mm by 250 mm) shingles for metric.

5.5 Starter Shingles - Starter Strip, Starter Strip Plus, Woodstart Starter Shingle, and Tri-Built Starter Strip

Starter Strip, Starter Strip Plus, Woodstart Starter Shingle, and Tri-Built Starter Strip are prefabricated starter course shingles with factory applied sealant. Starter Strip and Tri-Built Starter Strip are 6-5/8” x 39-3/8”. Starter Strip Plus and Tri-Built Starter Strip are 7-3/4” x 13-3/8”. Woodstart Starter Shingles are 13-3/8” x 40”.

6. INSTALLATION

OWENS CORNING asphalt shingles must be installed in accordance with the applicable code, this report, and the manufacturer’s published installation instructions. The shingles must be installed in accordance with Section 1507.2 of the 2012, 2009 and 2006 IBC or Section R905.2 of the 2012, 2009 and 2006 IRC, as applicable, except as noted in this report.

The manufacturer's published installation instructions must be available at all times on the jobsite during installation.

Minimum roof slopes must be 2:12 (16.67% slope or 9º) for the three-tab shingles described in section 5.1 and for the laminated shingles described in section 5.3 of this Report.

6.1 Underlayment and Ice Barriers:

For roof slopes greater than 4:12 (33.33% slope or 18º), the roof deck must be covered with a minimum of one layer of underlayment as described in Sections 7.2 and 7.3 of this Report. Underlayment application must be in accordance with Section 1507.2.8 of the 2012, 2009 and 2006 IBC or Section R905.2.7 of the 2012, 2009 and 2006 IRC, as applicable.

Roofs having slopes between 2:12 (16.67% slope or 9º) and 4:12 (33.33% slope or 18º) require two layers of the underlayment as described in Sections 7.2 and 7.3 of this Report. Underlayment application must be in accordance with Section 1507.2.8 of the 2012, 2009 and 2006 IBC or Section R905.2.7 of the 2012, 2009 and 2006 of the IRC, as applicable.

In areas where there has been a history of ice forming along the eaves, causing a backup of water, as indicated by Table R301.2 (1), an ice barrier must be provided in accordance with Section 1507.2.8.2 of the 2012, 2009 and 2006 IBC or Section R905.2.7.1 of the 2012, 2009 and 2006 IRC, as applicable.

6.2 Starter Shingle:

A starter course, as described in Section 7.4 of this Report, must be attached to the eave edge using fasteners described in Section 7.5 of this Report, located 1-½ – 3 inches (38 – 76 mm) from the eave edge and spaced 8 – 10 inch (203 – 254 mm) apart, for a total of five fasteners per shingle. The starter strip must overhang the eaves and rake edges by ¼ – ¾ inch (6 – 19 mm).

6.3 Asphalt Shingles:

The first course of field shingles must be installed over the starter course described in Section 7.4 of this Report.

Standard three-tab shingles must be installed with vertical joints offset 4 inches (102 mm), 5 inches (127 mm), or 6 inches (152 mm) from adjacent courses and metric-sized three-tab shingles must be installed with a 6-9/16 inch (167 mm) offset or any repeatable offset pattern greater than 4 inches (102 mm).

Duration® Premium, TruDefinition® Duration®, TruDefinition® Duration® Storm™, TruDefinition® Duration® MAX, TruDefinition® Oakridge®, Oakridge®, and TruDefinition® WeatherGuard® HP must be installed with a 6-½ inch (165 mm) offset or any repeatable offset pattern greater than 4 inches (102 mm).

The Berkshire® shingles must be installed with a 4-$^{3}/_{4}$ inch (121 mm) offset.

Woodcrest® and Woodmoor® must be installed with a 5 and 5 inch (127 and 127 mm) or a 5 inch and 15 inch (127 and 381 mm) offset.

End joints must be a minimum of 2 inches (51 mm) from a fastener in the shingle below. Offset patterns between courses may vary provided side laps are a minimum of 4 inches (102 mm) in succeeding courses.

6.3.1 Three-Tab Shingles – Classic®, and Supreme®:

For roof slopes of 2:12 up to 21:12 (16.67% or 9º up to 175% or 60º), each shingle must be fastened to the roof deck using a minimum of four fasteners.

For roof slopes over 21:12 (175% or 60º), six fasteners must be used and four 1 inch diameter spots of asphalt plastic cement per shingle (2 inches up from the bottom edge).

Fasteners must be located above the top of the cut-out and below the sealant strip, $^{5}/_{8}$ inch (16 mm) above the tab cut-out.

Maximum exposure to the weather must be 5 inches or 5-$^{5}/_{8} \pm {}^{1}/_{8}$ inches (127 or 143 ± 3 mm). In colder climates or wind regions where it is questionable whether the thermal-sealing adhesive will activate to seal the shingles, the shingles can be hand-sealed. A 1-in diameter (25.4 mm) spot of asphalt cement complying with ASTM D4586, Type I, Class I, should be placed under the corner (1 – 2 inches (25 – 51 mm) from each end) of each tab (two spots per tab).

6.3.2 Five-Tab Shingles – Devonshire™:

For roof slopes of 2:12 up to 21:12 (16.67% or 9º up to 175% or 60º) each shingle must be fastened to the roof deck using a minimum of six fasteners.

For roof slopes over 21:12 (175% or 60º), six fasteners must be used, and ten 1 inch diameter spots of asphalt plastic cement per shingle and two spots of asphalt plastic cement under each shingle tab.

Fasteners must be located 6-$^{1}/_{8}$ inches (157 mm) above the butt edge of the shingles.

Maximum exposure to the weather must be 5-$^{5}/_{8} \pm {}^{1}/_{8}$ inches (143 ± 3 mm).

In colder climates or wind regions where it is questionable whether the thermal-sealing adhesive will activate to seal the shingles, the shingles can be hand-sealed. Two, 1-inch diameter (25.4 mm) spots of cement should be placed under each shingle (Ten per shingle).

6.3.3 Laminated Shingles – Duration® Premium, TruDefinition® Duration®, TruDefinition® Duration® Storm, TruDefinition® Duration® MAX:

For roof slopes of 2:12 up to 21:12 (16.67% or 9º up to 175% or 60º), each shingle must be fastened to the roof deck using a minimum of four fasteners.

For roof slopes over 21:12 (175% or 60º), six fasteners must be used.

Fasteners must be located 6-$^{1}/_{8}$ inches (157 mm) above the butt edge of the shingles (center of the SureNail® fastening area).

Maximum exposure to the weather must be 5-$^{5}/_{8} \pm {}^{1}/_{8\ \text{inch}}$ (143 ± 3 mm)

In colder climates or wind regions where it is questionable whether the thermal-sealing adhesive will activate to seal the shingles, the shingles can be hand-sealed. Four, 1-inch diameter (25.4 mm) spots of cement should be placed under the exposed portion of the shingle, spaced 1 – 2 inches (25 – 51 mm) from each end of the shingle and two spots must be evenly spaced in between.

6.3.4 Laminated Shingles – Oakridge® and TruDefinition® Oakridge®:

For roof slopes of 2:12 up to 21:12 (16.67% or 9º up to 175% or 60º), each shingle must be fastened to the roof deck using a minimum of four fasteners.

For roof slopes over 21:12 (175% or 60º), six fasteners must be used, and four 1 inch diameter spots of asphalt plastic cement per shingle (2 inches up from the bottom edge).

Fasteners must be located 6-$^{1}/_{8}$ inches (157 mm) above the butt edge of the shingles.

Maximum exposure to the weather must be 5-$^{5}/_{8} \pm {}^{1}/_{8}$ inches (143 ± 3 mm)

In colder climates or wind regions where it is questionable whether the thermal-sealing adhesive will activate to seal the shingles, the shingles can be hand-sealed. Four, 1-inch diameter (25.4 mm) spots of cement should be placed under the exposed portion of the shingle, spaced 1 – 2 inches (25 – 51 mm) from each end of the shingle and two spots must be evenly spaced in between.

6.3.5 Laminated Shingles – Berkshire®:

For roof slopes of 2:12 up to 21:12 (16.67% or 9º up to 175% or 60º), each shingle must be fastened to the roof deck using a minimum of five fasteners.

For roof slopes over 21:12 (175% or 60º), six fasteners must be used and four 1 inch diameter spots of asphalt plastic cement per shingle and one spot of asphalt under each shingle tab, center of the shingle tab and 2 inches up from the bottom edge.

Fasteners must be located above the top of the cut-out and below the sealant strip, $^{5}/_{8}$ inch (16 mm) above the tab cut-out.

Maximum exposure to the weather must be 8-$^{3}/_{8} \pm {}^{1}/_{8}$ inch (213 ± 3 mm).

In colder climates or wind regions where it is questionable whether the thermal-sealing adhesive will activate to seal the shingles, the shingles can be hand-sealed. A 1-inch diameter (25.4 mm) spot of asphalt cement complying with ASTM D4586, Type I, Class I, should be placed under the corner 1 – 2 inches (25 – 51 mm) from each end of each tab (two spots per tab).

6.3.6 Laminated Shingles – Woodcrest® and Woodmoor®:

For roof slopes of 2:12 up to 21:12 (16.67% or 9º up to 175% or 60º), each shingle must be fastened to the roof deck using a minimum of five fasteners.

For roof slopes over 21:12 (175% or 60º), nine fasteners must be used, and four, 1 inch diameter spots of asphalt plastic cement per shingle and one spot of asphalt under each shingle tab, center of the shingle tab and 2 inches up from the bottom edge.

Fasteners must be located in the center of the SureNail® fastening area.

Maximum exposure to the weather must be 4 ± $^{1}/_{8}$ inches (102 ± 3 mm).

In colder climates or wind regions where it is questionable whether the thermal-sealing adhesive will activate to seal the shingles, the shingles can be hand-sealed. A 1-inch diameter (25.4 mm) spot of asphalt cement complying with ASTM D4586, Type I, Class I, should be placed under the corner 1 – 2 inches (25 – 51 mm) from each end of each tab (two spots per tab).

6.3.7 Laminated Shingles – TruDefinition® WeatherGuard® HP:

For roof slopes of 2:12 up to 21:12 (16.67% or 9º up to 175% or 60º), each shingle must be fastened to the roof deck using a minimum of six fasteners.

For roof slopes over 21:12 (175% or 60º), six fasteners must be used.

Fasteners must be located 6-$^{1}/_{8}$ inches (157 mm) above the butt edge of the shingles.

Maximum exposure to the weather must be 5-$^{5}/_{8} \pm {}^{1}/_{8}$ inch (143 ± 3 mm).

In colder climates or wind regions where it is questionable whether the thermal-sealing adhesive will activate to seal the shingles, the shingles can be hand-sealed. Four, 1-inch diameter (25.4 mm) spots of cement should be placed under the exposed portion of the shingle, spaced 1 – 2 inches (25 – 51 mm) from each end of the shingle and two spots must be evenly spaced in between.

6.4 Valley Construction and Other Flashing:

Valleys must consist of woven, open valley or closed-cut construction and must be flashed in accordance with Section 1507.2.9.2 of the 2012, 2009 and 2006 IBC or Section R905.2.8.2 of the 2012, 2009 and 2006 IRC. Other flashings must be in accordance with Sections 1503.2 and 1507.2.9 of the 2012, 2009 and 2006 IBC, or Sections R903.2 and 905.2.8 of the 2012, 2009 and 2006 IRC, as applicable.

6.5 Hip and Ridge Application:

Hip and ridge shingles must be placed evenly over hips and ridges, and must be fastened to the roof deck using minimum two fasteners, one located on either side of the shingle, 1 inch (25.4 mm) up from the edge. Berkshire® Hip & Ridge Shingles, DuraRidge® Hip and Ridge Shingles and High Ridge Hip & Ridge with Sealant prefabricated hip and ridge shingles must be installed with a maximum exposure of 8 inches (203 mm). WeatherGuard® HP, ProEdge®, ProEdge Storm®, and RIZERidge® prefabricated hip ridge shingles must be installed with a maximum exposure of 6 inches (127 mm). Nailing for Hip and Ridge shingles are shown in application instructions.

6.6 Reroofing:

The existing asphalt shingle roof covering must be inspected in accordance with the provisions and limitations of Section 1510 of the 2012, 2009 and 2006 IBC or Section R907 of the 2012, 2009 and 2006 IRC, as applicable. Prior to the reroofing, hip and ridge coverings must be removed.

Except as noted in this section, the shingles must be installed in accordance with Section 6.3 and 6.5 of this Report. Fasteners must be of sufficient length to penetrate ¾ inch (19.1 mm) into the sheathing, or through the sheathing where the sheathing is less than ¾ inch (19.1 mm) thick. Flashing and edging must comply with Section 6.4 and with Sections 1510.5 and 1510.6 of the 2012, 2009 and 2006 IBC and Sections R907.5 and R907.6 of the 2012, 2009 and 2006 IRC, as applicable.

7. INSTALLATION MATERIALS

7.1 Sheathing:

The roof deck must be code-complying, minimum 3/8-inch thick (9.5 mm), exterior plywood complying with DOC PS-1; rated sheathing complying with DOC PS-2; or solid sheathing using minimum nominally 1 by 6 lumber.

7.2 Underlayment:

Under the IBC or IRC, underlayment must comply with ASTM D226, Type I, ASTM D4869, Type I or ASTM D6757 as specified in Section 1507.2.3 of the 2012, 2009 and 2006 IBC or IRC Section R905.2.3 of the 2012, 2009 and 2006 IRC

7.3 Self-adhering Polymer Modified Bitumen Sheet:

When used as an underlayment under shingles described herein, self-adhering polymer modified bitumen sheet must comply with ASTM D1970.

7.4 Starter Shingles:

The starter course shingle may consist of Woodstart ® Starter Shingle, Starter Strip Plus, Starter Strip Shingle, or Tri Built Starter Strip. If self-sealing three-tab shingles are used, remove the exposed tab portion and install with factory-applied sealant adjacent to the eaves.

7.5 Fasteners:

Fasteners must be minimum No. 12 gage [0.105 inch (2.7 mm)], 3/8-inch diameter head (9.5 mm), galvanized, stainless steel, aluminum or copper corrosion-resistance nails. Fasteners must be of sufficient length to penetrate into the sheathing min. ¾-inch (19.1 mm), or through the sheathing, where the sheathing is less than ¾-inch (19.1 mm) thick. Fasteners must comply with ASTM F1667.

7.6 Asphalt Cement:

Asphalt cement must comply with ASTM D4586, Type I, Class I.

8. CONDITIONS OF USE

The OWENS CORNING Asphalt Shingles described in this Report comply with, or are suitable alternatives to, what is specified in those codes listed in Section 2 of this Report, subject to the following conditions:

8.1 Materials and methods of installation shall comply with this Report and the manufacturer's published installation instructions. In the event of a conflict between the installation instructions and this Report, this Report governs.

8.2 The products are manufactured at the locations listed in Table 1 of this Report under the UL LLC Classification and Follow-Up Service Program, which includes audits in accordance with quality elements of ICC-ES Acceptance Criteria for Quality Documentation, AC10.

8.3 See UL Online Certifications Directory for Prepared Roof-Covering Materials (TFWZ and TGAH).

9. SUPPORTING EVIDENCE

9.1 Manufacturer's descriptive product literature, including installation instructions.

9.2 UL test reports and Classification in accordance with ANSI/UL 790, Class A and UL Subject 2375. See UL Product Certification Category for Prepared Roof-Covering Materials (TFWZ).

9.3 UL test reports and Classification in accordance with ASTM D3462. See UL Product Certification Category for Prepared Roof-Covering Materials (TFWZ).

9.4 UL Test reports and Classification in accordance with ICC-ES Acceptance Criteria for Alternative Asphalt Roofing Shingles, AC438

9.5 UL test reports and Classification in accordance with UL 2390/ASTM D7158, Class H. See UL Product Certification Category for Prepared Roof-Covering Materials (TGAH).

9.6 UL test reports and Classification in accordance with ASTM D3161, Class F. See UL Product Certification Category for Prepared Roof-Covering Materials (TFWZ).

9.7 Quality Documentation in accordance with ICC-ES Acceptance Criteria for Quality Documentation, AC10.

See UL's On-Line Certification Directory for the following product categories referenced above:

- TFWZ
- TGAH

10. IDENTIFICATION

OWENS CORNING asphalt shingles described in this Evaluation Report are identified by a marking bearing the report holder's name (OWENS CORNING), the plant identification, the product name, the UL Classification Mark and the evaluation report number ULER2453-01. The validity of this Evaluation Report is contingent upon this identification appearing on the product. . The UL Classification Mark shall indicate:

a. UL790/ASTM E108 - Class A

b. ASTM D3161 – Class F or Class A

c. UL2390 (ASTM D7158) – Class H

d. ASTM D3462

e. ICC-ES Acceptance Criteria, AC438

11. USE OF UL EVALUATION REPORT

11.1 The approval of building products, materials or systems is under the responsibility of the applicable authorities having jurisdiction.

11.2 UL Evaluation Reports shall not be used in any manner that implies an endorsement of the product, material or system by UL.

11.3 The current status of this report, as well as a complete directory of UL Evaluation Reports may be found at UL.com via our On-Line Certifications Directory: www.ul.com/erdirectory

Table 1 – Manufacturing Locations

LISTEE	LOCATION	FACTORY ID
OWENS CORNING	5201 FOX ST DENVER CO 80216	DENVER
OWENS CORNING	704 CORRINE AVE N STATION MEMPHIS TN 38107	MEMPHIS
OWENS CORNING	1249 NEWARK TPKE KEARNY NJ 07032	KEARNY
OWENS CORNING	1901 49TH AVE N MINNEAPOLIS MN 55430	MINNEAPOLIS
OWENS CORNING	128 W 8TH ST BROOKVILLE IN 47012	BROOKVILLE
OWENS CORNING	1501 N TAMARIND ST PO BOX 5665 COMPTON CA 90224	COMPTON
OWENS CORNING	8360 MARKET ST RD HOUSTON TX 77029	HOUSTON
OWENS CORNING	201 N NURSERY RD IRVING TX 75061	IRVING
OWENS CORNING	3750 NW YEON AVE PORTLAND OR 97208	PORTLAND
OWENS CORNING	5824 S ARCHER RD SUMMIT IL 60501	SUMMIT
OWENS CORNING	4795 FREDERICK DR ATLANTA GA 30336	ATLANTA
OWENS CORNING	1035 TALLEYRAND AVE JACKSONVILLE FL 32206	JACKSONVILLE
OWENS CORNING	890 W SMITH RD MEDINA OH 44256	MEDINA
OWENS CORNING	1 FOUNDATION DR SAVANNAH GA 31408	SAVANNAH

© 2014 UL LLC

This UL Evaluation Report is not an endorsement or recommendation for use of the subject and/or product described herein. This report is not the UL Listing or UL Classification Report that covers the subject product. The subject product's UL Listing or UL Classification is covered under a separate UL Report. UL disclaims all representations and warranties whether express or implied, with respect to this report and the subject or product described herein. Contents of this report may be based on data that has been generated by laboratories other than UL that are accredited as complying with ISO/IEC Standard17025 by the International Accreditation Service (IAS) or by any other accreditation body that is a signatory to the International Laboratory Accreditation Cooperation (ILAC) Mutual Recognition Arrangement (MRA). The scope of the laboratory's accreditation shall include the specific type of testing covered in the test report. As the accuracy of any non-UL data is the responsibility of the accredited laboratory, UL does not accept responsibility for the accuracy of this data.