HISTORIC AND DESIGN REVIEW COMMISSION

March 20, 2019

HDRC CASE NO:	**2019-104**
COMMON NAME:	7353 Joe Newton St./Pipers Creek Meadow
LEGAL DESCRIPTION:	NCB 18083 BLK 1 LOT E 681.77 OF 1 (INGRAM WEST SUBD)
ZONING:	R-6
CITY COUNCIL DIST.:	6
APPLICANT:	Tara Lindberg/Dunaway Associates
OWNER:	City of San Antonio
TYPE OF WORK:	Park Improvements
APPLICATION RECEIVED:	March 01, 2019
60-DAY REVIEW:	April 30, 2019
CASE MANAGER:	Adam Rajper

REQUEST:

The applicant is requesting a Certificate of Appropriateness for approval to carry out various park improvements.

APPLICABLE CITATIONS:

UDC Sec. 35-641. - Design Considerations for Historic and Design Review Commission Recommendations.
In reviewing an application, the historic and design review commission shall be aware of the importance of attempting to find a way to meet the current needs of the City of San Antonio, lessee or licensee of public property. The historic and design review commission shall also recognize the importance of recommending approval of plans that will be reasonable to implement. The best urban design standards possible can and should be employed with public property including buildings and facilities, parks and open spaces, and the public right-of-way. Design and construction on public property should employ such standards because the use of public monies for design and construction is a public trust. Public commitment to quality design should encourage better design by the private sector. Finally, using such design standards for public property improves the identity and the quality of life of the surrounding neighborhoods.

UDC Sec 35-642. – New Construction of Buildings and Facilities:
In considering whether to recommend approval or disapproval of a certificate, the historic and design review commission shall be guided by the following design considerations. These are not intended to restrict imagination, innovation or variety, but rather to assist in focusing on design principles, which can result in creative solutions that will enhance the city and its neighborhoods. Good and original design solutions that meet the individual requirements of a specific site or neighborhood are encouraged and welcomed.
(a) Site and Setting.
(1) Building sites should be planned to take into consideration existing natural climatic and topographical features. The intrusive leveling of the site should be avoided. Climatic factors such as sun, wind, and temperature should become an integral part of the design to encourage design of site-specific facilities which reinforces the individual identity of a neighborhood and promotes energy efficient facilities.
(2) Special consideration should be given to maintain existing urban design characteristics, such as setbacks, building heights, streetscapes, pedestrian movement, and traffic flow. Building placement should enhance or create focal points and views. Continuity of scale and orientation shall be emphasized.
(3) Accessibility from streets should be designed to accommodate safe pedestrian movement as well as vehicular traffic. Where possible, parking areas should be screened from view from the public right-of-way by attractive fences, berms, plantings or other means.
(4) Historically significant aspects of the site shall be identified and if possible incorporated into the site design. Historic relationships between buildings, such as plazas or open spaces, boulevards or axial relationships should be maintained.
(b) Building Design.
(1) Buildings for the public should maintain the highest quality standards of design integrity. They should elicit a pride of ownership for all citizens. Public buildings should reflect the unique and diverse character of San Antonio and should be responsive to the time and place in which they were constructed.
(2) Buildings shall be in scale with their adjoining surroundings and shall be in harmonious conformance to the identifying quality and characteristics of the neighborhood. They shall be compatible in design, style and materials. Reproductions of styles and designs from a different time period are not encouraged, consistent with

the secretary of the interior's standards. Major horizontal and vertical elements in adjoining sites should be respected.
(3) Materials shall be suitable to the type of building and design in which they are used. They shall be durable and easily maintained. Materials and designs at pedestrian level shall be at human scale, that is they shall be designed to be understood and appreciated by someone on foot. Materials should be selected that respect the historic character of the surrounding area in texture, size and color.
(4) Building components such as doors, windows, overhangs, awnings, roof shapes and decorative elements shall all be designed to contribute to the proportions and scale of their surrounding context. Established mass/void relationships shall be maintained. Patterns and rhythms in the streetscape shall be continued.
(5) Colors shall be harmonious with the surrounding environment, but should not be dull. Choice of color should reflect the local and regional character. Nearby historic colors shall be respected.
(6) Mechanical equipment or other utility hardware should be screened from public view with materials compatible with the building design. Where possible, rooftop mechanical equipment should be screened, even from above. Where feasible, overhead utilities should also be underground or attractively screened. Exterior lighting shall be an integral part of the design. Interior lighting shall be controlled so that the spillover lighting onto public walkways is not annoying to pedestrians.
(7) Signs which are out of keeping with the character of the environment in question should not be used. Excessive size and inappropriate placement on buildings results in visual clutter. Signs should be designed to relate harmoniously to exterior building materials and colors. Signs should express a simple clear message with wording kept to a minimum.
(8) Auxiliary design. The site should take into account the compatibility of landscaping, parking facilities, utility and service areas, walkways and appurtenances. These should be designed with the overall environment in mind and should be in visual keeping with related buildings, structures and places.

FINDINGS:

a. The property located at 7353 Joe Newton is a public park with the common name of Pipers Creek Meadow and is situated to the west of Downtown. The applicant is requesting approval for various park improvements.
b. LANDSCAPE MODIFICATIONS – The applicant has proposed to perform various landscape modifications, including the selective removal of trees and other vegetation to accommodate new park improvements. The majority of trees and vegetation will be retained and seed mixes will be added at areas of disturbance. Staff finds the proposal consistent with the UDC.
c. PARK IMPROVEMENTS – The applicant has proposed various park improvements, including the construction of an asphalt surface parking lot, concrete walking trail, porta potty restroom enclosure, and playground, as well as the installation of interpretive signage, pedestrian lighting, benches, picnic tables, bike racks, and trash/recycling receptacles. Staff finds the proposal consistent with the UDC.
d. ARCHAEOLOGY – The project shall comply with all federal, state, and local laws, rules, and regulations regarding archaeology.

RECOMMENDATION:

Staff recommends approval based on findings a through d with the following stipulations:

i. That the applicant coordinate with the City Arborist’s office to develop a comprehensive tree preservation plan and landscaping plan for final approval, and indicate where existing trees will be removed, if applicable.
ii. ARCHAEOLOGY – The project shall comply with all federal, state, and local laws, rules, and regulations regarding archaeology.

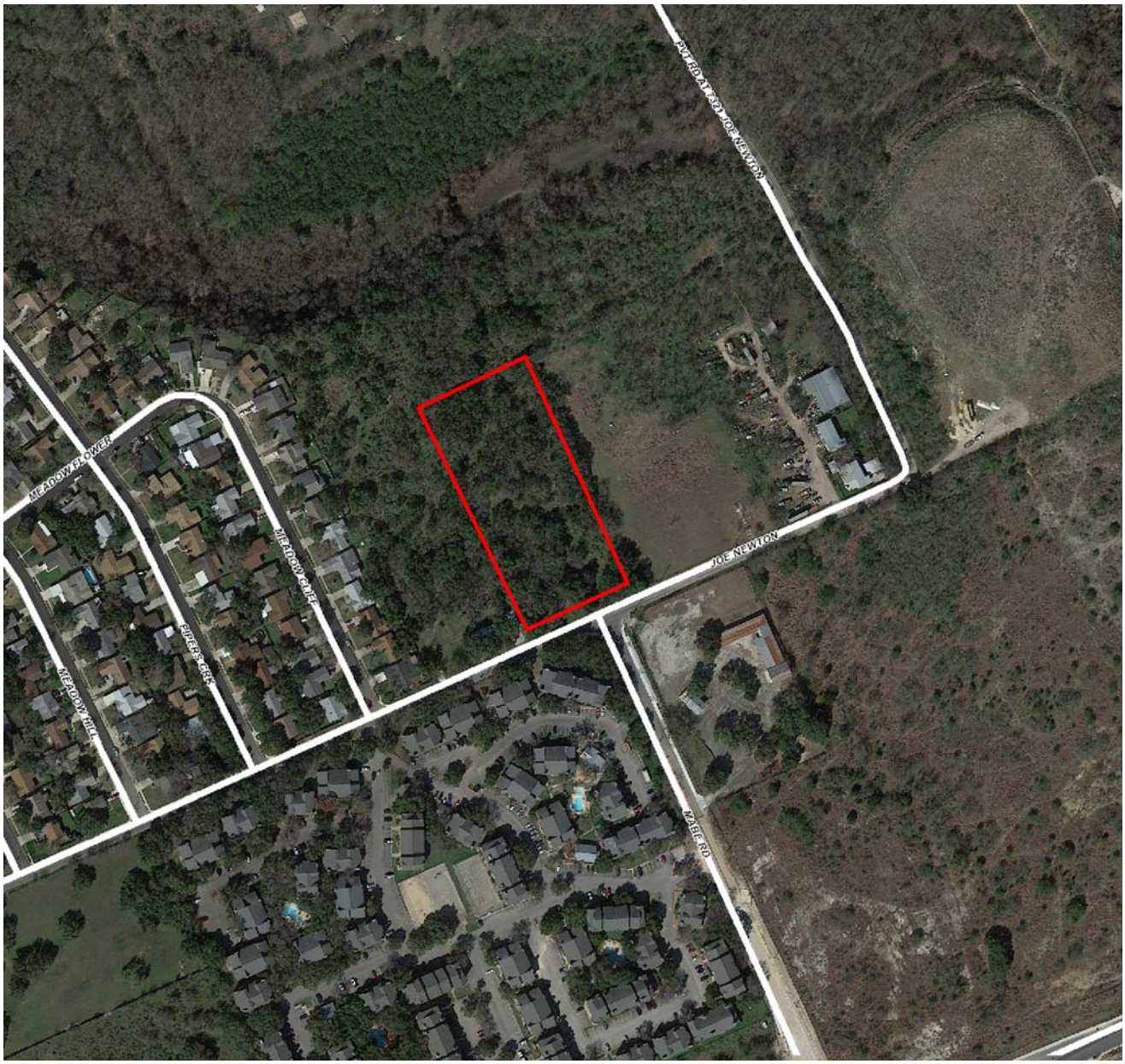

N

Flex Viewer

Powered by ArcGIS Server

Printed:Mar 12, 2019

The City of San Antonio does not guarantee the accuracy, adequacy, completeness or usefulness of any information. The City does not warrant the completeness, timeliness, or positional, thematic, and attribute accuracy of the GIS data. The GIS data, cartographic products, and associated applications are not legal representations of the depicted data. Information shown on these maps is derived from public records that are constantly undergoing revision. Under no circumstances should GIS-derived products be used for final design purposes. The City provides this information on an "as is" basis without warranty of any kind, express or implied, including but not limited to warranties of merchantability or fitness for a particular purpose, and assumes no responsibility for anyone's use of the information.

A & M Sports
7353 Joe Newton Street
Joe Newton St
Joe Newton St
Joe Newton St
Joe Newton St
Meadow Flower St
Meadow Creek St
Pipers Creek St
Pipers Creek St
Pipers Creek St
Pipers Creek St
Meadow Cliff St
Meadow Hill
Mabe Rd
Google

Site Photos

Subject: Pipers Meadow HDRC Submittal **Dunaway #:** 3677.006

Date: March 1, 2019

Photos of the Pipers Meadow Park Site – 7353 Joe Newton, San Antonio, TX 78251:

PIPERS MEADOW PARK

95% REVIEW SET

7353 JOE NEWTON ST
SAN ANTONIO, TEXAS

MARCH 7, 2019

OWNER:

Transportation & Capital Improvements
The City of San Antonio
Municipal Plaza Building
114 W. Commerce, 4th Floor
San Antonio, TX 78205
(210) 207-8022

CITY COUNCIL:

RON NIRENBERG	MAYOR
ROBERTO C. TREVINO	DISTRICT 1
ART A. HALL	DISTRICT 2
REBECCA J. VIAGRAN	DISTRICT 3
REY SALDANA	DISTRICT 4
SHIRLEY GONZALES	DISTRICT 5
GREG BROCKHOUSE	DISTRICT 6
ANA SANDOVAL	DISTRICT 7
MANNY PELAEZ	DISTRICT 8
JOHN COURAGE	DISTRICT 9
CLAYTON PERRY	DISTRICT 10

TCI PROJECT TEAM

DESIREE SALMON	SENIOR LANDSCAPE ARCHITECT
ERIC REYNA	PROJECT MANAGER

PARKS AND RECREATION PROJECT TEAM

SANDY JENKINS
TONY FORSHAGE
ROCKY DUQUE DE ESTRADA

LANDSCAPE ARCHITECT:

DUNAWAY
118 Broadway Street · Suite 201
San Antonio, Texas 78205
Tel: 210.267.5246
Fax: 817.335.7437

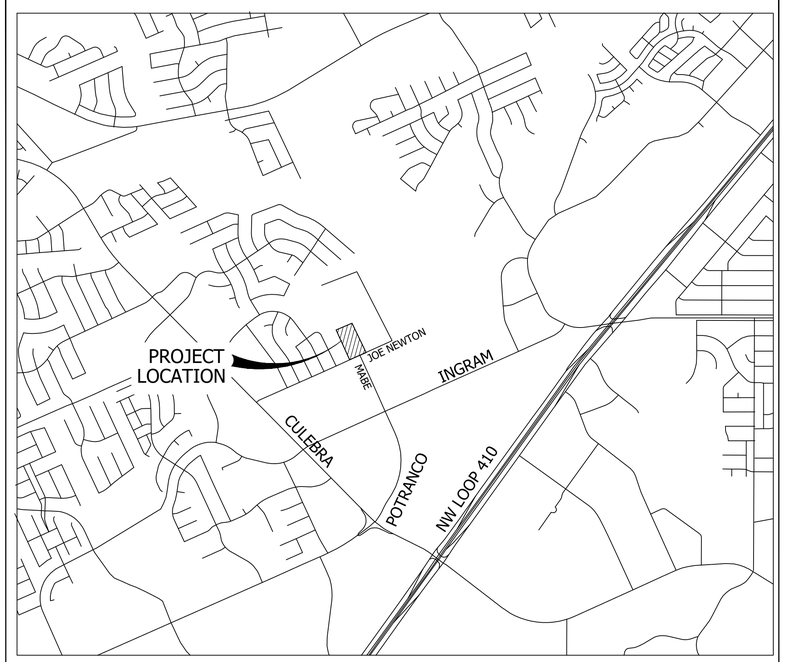

LOCATION MAP

NORTH

SHEET INDEX:

NO.	SHEET NAME
	COVER SHEET
L0.00	CITY OF SAN ANTONIO GENERAL NOTES
L0.01	GENERAL NOTES
L0.02	EXISTING CONDITIONS
L0.03	SITE REFERENCE PLAN
L0.04	TREE PRESERVATION PLAN
L0.05	TREE PRESERVATION PLAN
L0.06	TREE INVENTORY AND REQUIREMENTS
L0.07	TREE PRESERVATION NOTES AND DETAILS
L1.00	SITE PLAN
L1.01	SITE PLAN
L2.00	GRADING PLAN
L2.01	GRADING PLAN
L3.00	DETAILS INDEX
L3.01	PAVING DETAILS
L3.02	PARKING DETAILS
L3.03	SITE DETAILS
L3.04	SIGNAGE DETAILS
L3.05	LIGHTING DETAILS
L3.06	RESTROOM DETAILS
L3.07	RESTROOM DETAILS
L4.00	PLANTING PLAN
L4.01	PLANTING PLAN
L4.02	PLANT LIST, NOTES & DETAILS
L4.03	TEMPORARY IRRIGATION NOTES & DETAILS

GENERAL NOTES

1. ALL CONSTRUCTION SHALL CONFORM TO THE CITY OF SAN ANTONIO STANDARD SPECIFICATIONS FOR CONSTRUCTION JUNE 2008, OR LATEST.
2. NO EXTRA PAYMENT SHALL BE ALLOWED FOR WORK CALLED FOR ON THE PLANS, BUT NOT INCLUDED IN THE BID PROPOSAL. THIS INCIDENTAL WORK WILL BE REQUIRED AND SHALL BE INCLUDED IN THE PAY ITEM TO WHICH IT RELATES.
3. THE CONTRACTOR SHALL PROVIDE ACCESS FOR THE DELIVERY OF MAIL BY THE U.S. POSTAL SERVICE.
4. THE CONTRACTOR SHALL BE RESPONSIBLE FOR RESTORING TO ITS ORIGINAL OR BETTER CONDITION ANY DAMAGE DONE TO EXISTING FENCES, CONCRETE ISLANDS, STREET PAVING, CURBS, SHRUBS, BUSHES OR DRIVEWAYS. (NO SEPARATE PAY ITEM).
5. IT IS THE CONTRACTOR'S RESPONSIBILITY TO SEE THAT ALL SIGNS AND BARRICADES ARE PROPERLY INSTALLED AND MAINTAINED. ALL LOCATIONS AND DISTANCES WILL BE DECIDED UPON IN THE FIELD BY THE CONTRACTOR, USING THE "TEXAS MANUAL ON UNIFORM TRAFFIC CONTROL DEVICES". THE CITY'S CONSTRUCTION INSPECTOR AND TRAFFIC ENGINEERING REPRESENTATIVE WILL ONLY BE RESPONSIBLE TO INSPECT BARRICADES AND SIGNS. IF, IN THE OPINION OF THE TRAFFIC ENGINEERING REPRESENTATIVE AND THE CONSTRUCTION INSPECTOR, THE BARRICADES AND SIGNS DO NOT CONFORM TO ESTABLISHED STANDARDS OR ARE INCORRECTLY PLACED OR ARE INSUFFICIENT IN QUANTITY TO PROTECT THE GENERAL PUBLIC, THE CONSTRUCTION INSPECTOR SHALL HAVE THE OPTION TO STOP OPERATIONS UNTIL SUCH TIME AS THE CONDITIONS ARE CORRECTED.
6. IF THE NEED ARISES, ADDITIONAL BARRICADES AND DIRECTIONAL DEVICES MAY BE ORDERED BY THE TRAFFIC ENGINEERING REPRESENTATIVE AT THE CONTRACTOR'S EXPENSE.
7. DUE TO FEDERAL REGULATIONS TITLE 49, PART 192.171 C.P.S. MUST MAINTAIN ACCESS TO GAS VALVES AT ALL TIMES. THE CONTRACTOR MUST PROTECT AND WORK AROUND ANY GAS VALVES THAT ARE IN THE PROJECT AREA.
8. CONTRACTOR SHALL NOTIFY THE CITY INSPECTOR TWENTY FOUR (24) HOURS PRIOR TO BACKFILL OF ANY UTILITY TRENCHES TO SCHEDULE FOR DENSITY TEST AS REQUIRED.
9. CONTRACTOR SHALL PRESERVE ALL CONSTRUCTION STAKES, MARKS, ETC. IF ANY ARE DESTROYED OR REMOVED BY THE CONTRACTOR OR HIS EMPLOYEES, THEY SHALL BE REPLACED AT THE CONTRACTOR'S EXPENSE.
10. CONTRACTOR SHALL NOTIFY ALL UTILITY COMPANIES PRIOR TO CONSTRUCTION TO DETERMINE THE LOCATION OF EXISTING UTILITIES. CONTRACTOR SHALL NOTIFY THE FOLLOWING AT LEAST FORTY-EIGHT (48) HOURS PRIOR TO EXCAVATION OPERATION:
    - SAN ANTONIO WATER SYSTEM (SAWS) 233-2010
    - BEXAR METROPOLITAN WATER DISTRICT (BEXAR MET) 354-6538 / 357-5741
    - COSA DRAINAGE 207-8048
    - COSA SIGNAL OPERATIONS 207-7720 / 207-7765
    - TEXAS STATE WIDE ONE CALL LOCATOR 1-800-344-8377
    - CITY PUBLIC SERVICE ENERGY
    - TIME WARNER
    - AT&T
    - MCI
11. THE EXISTENCE AND LOCATION OF UNDERGROUND UTILITIES INDICATED ON THE PLANS ARE TAKEN FROM AVAILABLE RECORDS AND ARE NOT GUARANTEED, BUT SHALL BE INVESTIGATED AND VERIFIED BY THE CONTRACTOR BEFORE STARTING WORK. THE CONTRACTOR SHALL BE HELD RESPONSIBLE FOR ANY DAMAGE TO AND FOR THE MAINTENANCE AND PROTECTION OF THE EXISTING UTILITIES EVEN IF THEY ARE NOT SHOWN ON THE PLANS. LOCATION AND DEPTH OF EXISTING UTILITIES SHOWN HERE ARE APPROXIMATE ONLY. ACTUAL LOCATIONS AND DEPTHS MUST BE VERIFIED BY THE CONTRACTOR PRIOR TO CONSTRUCTION AND HE SHALL BE RESPONSIBLE FOR PROTECTION OF SAME DURING CONSTRUCTION.
12. ALL WASTE MATERIAL SHALL BECOME PROPERTY OF THE CONTRACTOR AND SHALL BE HIS SOLE REPONSIBILITY TO DISPOSE OF THIS MATERIAL OFF THE LIMITS OF THE PROJECT. NO WASTE MATERIAL SHALL BE PLACED IN EXISTING LOWS THAT WILL BLOCK OR ALTER FLOW LIMITS OF EXISTING ARTIFICIAL OR NATURAL DRAINAGE.
13. THE CONTRACTOR SHALL NOT PLACE ANY WASTE MATERIAL IN THE 100-YEAR FLOOD PLAIN WITHOUT FIRST OBTAINING AN APPROVED FLOOD PLAIN DEVELOPMENT PERMIT.
14. THE CONTRACTOR SHALL MAINTAIN ALL ADJOINING STREETS AND TRAVELED ROUTES FREE FROM SPILLED AND / OR TRACKED CONSTRUCTION MATERIALS AND / OR DEBRIS.
15. IF THE CONTRACTOR ENCOUNTERS ANY ARCHAEOLOGICAL DEPOSITS DURING CONSTRUCTION OPERATIONS, THE CONTRACTOR MUST STOP EXCAVATION IMMEDIATELY, CONTACT THE CITY INSPECTOR, AND CALL THE CITY HISTORIC PRESERVATION OFFICE AT 207-7306 OR 207-3327 FOR AN ARCHAEOLOGICAL INVESTIGATION. THE CONTRACTOR CANNOT BEGIN EXCAVATION AGAIN WITHOUT WRITTEN PERMISSION FROM THE CITY.
    IF MORE THAN THREE (3) DAYS ARE REQUIRED FOR INVESTIGATION (NOT INCLUDING HOLIDAY AND WEEKENDS) AND IF THE CONTRACTOR IS UNABLE TO WORK IN OTHER AREAS, THEN THE CONTRACTOR WILL BE ALLOWED TO NEGOTIATE FOR ADDITIONAL CONSTRUCTION TIME UPON WRITTEN REQUEST WITHIN TEN (10) DAYS AFTER THE FIRST NOTICE TO THE CITY OF ARCHAEOLOGICAL INVESTIGATION FOR EACH EVENT.
    IF THE TIME REQUIRED FOR INVESTIGATION IS LESS THAN OR EQUAL TO THREE (3) DAYS FOR EACH EVENT, CONTRACT DURATION WILL NOT BE EXTENDED.
16. IF SUSPECTED CONTAMINATION IS ENCOUNTERED DURING CONSTRUCTION OPERATIONS, C.O.S.A. SHALL BE NOTIFIED IMMEDIATELY WHEN CONTAMINATED SOILS AND / OR GROUNDWATER ARE ENCOUNTERED AT LOCATIONS NOT IDENTIFIED IN THE PLANS. THE NOTIFICATION SHOULD INCLUDE THE STATION NUMBER, TYPE OF CONTAMINATED MEDIA, EVIDENCE OF CONTAMINATION AND MEASURES TAKEN TO CONTAIN THE CONTAMINATED MEDIA AND PREVENT PUBLIC ACCESS. THE CONTAMINATED SOIL AND / OR GROUNDWATER SHALL NOT BE REMOVED FROM THE LOCATION WITHOUT PRIOR C.O.S.A. APPROVAL.
    THE CONTRACTOR MUST STOP THE EXCAVATION IMMEDIATELY AND CONTACT THE C.O.S.A. INSPECTOR. THE CONTRACTOR CANNOT BEGIN EXCAVATION ACTIVITIES WITHOUT WRITTEN PERMISSION FROM THE CITY.
17. CONTRACTOR IS TO INCLUDE A MAILBOX POST BLOCKOUT FOR VACANT LOTS AND ALL RESIDENCES WHICH DO NOT HAVE MAILBOXES AT THE CURB. BLOCKOUTS ARE PROVIDED FOR FUTURE USE BY THE POST OFFICE.
18. CONTRACTOR SHALL NOT REMOVE OR ADJUST ANY VIA FACILITIES. THE CONTRACTOR MUST CONTACT VIA FOURTEEN DAYS PRIOR, FOR THE REMOVAL OF BENCHES, STOP POLES OR ANY OTHER VIA FACILITIES THAT MAY BE PRESENT. PLEASE PROVIDE THIRTY DAYS PRIOR NOTICE FOR SHELTER REMOVAL (TELEPHONE NOS: (210) 362-2155 OR (210) 362-2096). THE CONTRACTOR WILL BE LIABLE FOR ANY DAMAGES TO VIA FACILITIES NOT REMOVED BY VIA. THE CONTRACTOR IS REQUIRED TO REPLACE ALL FLATWORK REMOVED OR DAMAGED IN THE COURSE OF EXECUTING THE CONTRACT UNLESS OTHERWISE NOTED BY VIA. THE CONTRACTOR WILL BE RESPONSIBLE FOR PROTECTING VIA FACILITIES IF ADJACENT TO WORK AREA.

TREE PROTECTION AND PRESERVATION GENERAL NOTES

1. NO UTILITY OR STREET EXCAVATION WORK SHALL BEGIN IN AREAS WHERE TREE PRESERVATION AND TREATMENT MEASURES HAVE NOT BEEN COMPLETED AND APPROVED.
2. TREE PROTECTION FENCING SHALL BE REQUIRED. TREE PROTECTION FENCING SHALL BE INSTALLED, MAINTAINED AND REPAIRED BY THE CONTRACTOR DURING SITE CONSTRUCTION. DURING CONSTRUCTION ACTIVITY, AT LEAST A SIX-INCH LAYER OF COARSE MULCH SHALL BE PLACED AND MAINTAINED OVER THE ROOT PROTECTION ZONE (NO SEPARATE PAY ITEM).
3. THE CONTRACTOR SHALL AVOID CUTTING ROOTS LARGER THAN ONE INCH IN DIAMETER WHEN EXCAVATING NEAR EXISTING TREES. EXCAVATION IN THE VICINITY OF TREES SHALL PROCEED WITH CAUTION. THE CONTRACTOR SHALL CONTACT THE CITY INSPECTOR FOR GUIDANCE.
4. ROOTS WILL BE CUT WITH A ROCK SAW OR BY HAND, NOT BY AN EXCAVATOR OR OTHER ROAD CONSTRUCTION EQUIPMENT.
5. ALL CURB AND SIDEWALK WORK SHALL USE ALTERNATIVE CONSTRUCTION METHODS TO MINIMIZE EXTENSIVE ROOT DAMAGE TO TREES (REFER TO DETAILS).
6. EXPOSED ROOTS SHALL BE COVERED AT THE END OF THE DAY USING TECHNIQUES SUCH AS COVERING WITH SOIL, MULCH, OR WET BURLAP.
7. NO EQUIPMENT, VEHICLES OR MATERIALS SHALL OPERATE OR BE STORED WITHIN THE ROOT PROTECTION ZONE OF ANY TREE NEAR THE PROJECT. ROOT PROTECTION ZONE IS 1 FOOT OF RADIUS PER INCH OF TREE'S DIAMETER. A 10-INCH DIAMETER TREE WOULD HAVE A 10 FOOT RADIUS ROOT PROTECTION ZONE AROUND THE TREE. ROOTS OR BRANCHES IN CONFLICT WITH THE CONSTRUCTION SHALL BE CUT CLEANLY ACCORDING TO PROPER PRUNING METHODS. OAK WOUNDS SHALL BE PAINTED OVER WITHIN 30 MINUTES TO PREVENT OAK WILT.
8. SAPLINGS, SHRUBS OR BUSHES TO BE CLEARED FROM THE PROTECTED ROOT ZONE AREA OF A LARGE TREE SHALL BE REMOVED BY HAND AS DESIGNATED BY THE INSPECTOR.
9. NO WIRES, NAILS OR OTHER MATERIAL MAY BE ATTACHED TO PROTECTED TREES.
10. TREES, TREE LIMBS, BUSHES AND SHRUBS LOCATED IN THE CITY STREET OR ALLEY RIGHT-OF-WAY OR PERMANENT EASEMENTS WHICH INTERFERE WITH PROPOSED CONSTRUCTION ACTIVITIES SHALL BE PROPERLY PRUNED FOLLOWING THE ANSI A-300 STANDARDS FOR PRUNING. ALL TREE PRUNING SHALL BE COMPLETED BY A CITY OF SAN ANTONIO TREE MAINTENANCE LICENSED CONTRACTOR (ARTICLE 21-171, CITY CODE) ONLY AFTER APPROVAL FROM THE CAPITAL PROJECTS MANAGEMENT THROUGH THE INSPECTOR.
11. NO EXCESSIVE TREE TRIMMING WILL BE PERMITTED.
12. ALL DEBRIS GENERATED BY THE PRUNING AND TRIMMING OF THE TREES AND / OR BUSHES SHALL BECOME THE PROPERTY OF THE CONTRACTOR AND SHALL BE DISPOSED OF PROPERLY (NO SEPARATE PAY ITEM).
13. TREES MUST BE MAINTAINED IN GOOD HEALTH THROUGHOUT THE CONSTRUCTION PROCESS. MAINTENANCE MAY INCLUDE, BUT NOT LIMITED TO: WATERING THE ROOT PROTECTION ZONE, WASHING FOLIAGE, FERTILIZATION, PRUNING, ADDITIONAL MULCH APPLICATIONS AND OTHER MAINTENANCE AS NEEDED ON THE PROJECT.
14. ANY TREE REMOVAL SHALL BE APPROVED BY THE CITY ARBORIST. (207-0278)
15. TREES WHICH ARE DAMAGED OR LOST DUE TO THE CONTRACTOR'S NEGLIGENCE DURING CONSTRUCTION SHALL BE MITIGATED TO THE CITY'S SATISFACTION.
16. TREE PLANTING FOR MITIGATION OR ENHANCEMENT: ALL PLANTED TREES SHALL BE MAINTAINED IN A HEALTHY CONDITION AT ALL TIMES. THIS INCLUDES IRRIGATION, FERTILIZING, PRUNING AND OTHER MAINTENANCE AS NEEDED ON THE PROJECT. TREES THAT DIE WITHIN TWELVE (12) MONTHS SHALL BE REPLACED WITH A TREE OF EQUAL SIZE AND SPECIES.

ACCESSIBILITY REQUIREMENTS

1. THE CONTRACTOR SHALL PROVIDE AND MAINTAIN VEHICULAR AND PEDESTRIAN ACCESS AT ALL TIMES TO LOCAL RESIDENCES AND BUSINESSES.
2. WHEN THE WORK REQUIRES THE EXCAVATION OF THE STREET AND THE REMOVAL OF THE EXISTING DRIVEWAY APPROACHES AND SIDEWALKS, THE CONTRACTOR SHALL BE RESPONSIBLE FOR PROVIDING TEMPORARY ALL-WEATHER ACCESS TO THE BUSINESSES AND RESIDENCES. THE TEMPORARY DRIVEWAY APPROACHES SHALL BE CONSTRUCTED WITH FLEXIBLE BASE OR GRAVEL MATERIAL AT NO SEPARATE COST TO THE CITY.
3. PRIOR TO INITIATING THE CONSTRUCTION OF NEW DRIVEWAY APPROACHES, THE CONTRACTOR SHALL GIVE ADVANCE WARNING IN PERSON, OR IN WRITING, OF AT LEAST 48 HOURS TO EACH RESIDENCE THAT WILL BE IMMEDIATELY AFFECTED, SO THAT ALTERNATE PLANS MAY BE MADE BY THE RESIDENTS.
4. FOR BUSINESSES WITH MORE THAN ONE DRIVEWAY, AT LEAST ONE DRIVEWAY SHALL REMAIN OPEN WHILE THE OTHER NEW DRIVEWAY APPROACHES ARE CONSTRUCTED. FOR BUSINESSES WITH ONLY ONE DRIVEWAY, THE NEW DRIVEWAY APPROACH SHALL BE CONSTRUCTED IN HALF WIDTHS, UNLESS A TEMPORARY ASPHALT DRIVEWAY IS FIRST INSTALLED AT NO SEPARATE COST TO THE CITY.

95% REVIEW SET

REVISIONS

NO.	DATE	DESCRIPTION

COSA GENERAL NOTES

CITY OF SAN ANTONIO
PIPERS MEADOW PARK
SAN ANTONIO, TEXAS

DUNAWAY
118 Broadway • Suite 201 • San Antonio, Texas 78205
Tel: (210) 212-2246
(TX REG. F-1114)

PRELIMINARY
FOR REVIEW ONLY
These documents are for Design Review and not intended for Construction, Bidding or Permit Purposes. They were prepared by, or under the supervision of:
Bryan Kye Mask
L.A.# 2369

JOB NO.	3677.006
DESIGNED BY:	TL
DRAWN BY:	TL
CHECKED BY:	JM
DATE:	March 7, 2019
SHEET:	L0.00

FILE: L0.00.DWG, MARTINEZ, FEBRUARY 21, 2019
PLOTTED BY: SANTOS, TONY
PLOTTED WITH: AutoCAD PDF (High Quality Print).pc3

GENERAL NOTES:

1. THE CONTRACTOR SHALL MAINTAIN THE ROAD IN GOOD WORKING ORDER BY PERIODICALLY ADDING CRUSHED LIMESTONE TOAD BASE MATERIAL AND GRADING TO ENSURE A SMOOTH, NON-RUTTED SURFACE. THE CONTRACTOR SHALL REPAIR THE ROAD AND THE CAMP ENTRANCE AS REQUESTED BY THE OWNER.

2. THE CONTRACTOR SHALL COORDINATE ALL CONSTRUCTION ACTIVITIES WITH THE OWNER AND ADJUST CONSTRUCTION ACTIVITIES, DELIVERIES, STORAGE, ETC. TO ACCOMMODATE THE OWNER'S NEEDS FOR USE OF THESE FACILITIES.

3. THE CONSTRUCTION STAGING AREA IS LOCATED _____. THE EXACT BOUNDARIES OF THE STAGING AREA WILL BE AGREED TO BY THE OWNER AND THE CONTRACTOR PRIOR TO THE START OF CONSTRUCTION. THE CONTRACTOR SHALL SECURE THE STAGING AREA WITH A MINIMUM OF A 6' CHAIN LINK FENCE WITH LOCKABLE GATES. THE STAGING AREA SHALL BE MAINTAINED WITH A DRIVING SURFACE SUITABLE TO PREVENT EROSION.

4. UPON COMPLETION OF THE CONSTRUCTION, THE STAGING AREA SHALL BE REMOVED. THE AREA DISTURBED SHALL BE REGRADED TO PROVIDE A SMOOTH CONTOUR. ALL GRAVEL, CRUSHED LIMESTONE, ETC. SHALL BE COMPLETELY REMOVED PRIOR TO FINISH GRADING.

SITE PLAN NOTES:

1. THE CONTRACTOR SHALL BE RESPONSIBLE FOR ALL CONSTRUCTION SURVEYING FOR THIS PROJECT.

2. THE CONTRACTOR, AND THEIR AGENTS, SUBCONTRACTOR, ENGINEER, OR SURVEYOR ARE COMPLETELY RESPONSIBLE FOR THE VERIFICATION OF THE ACCURACY OF THE DIMENSION CONTROL FURNISHED HEREIN. THE OWNER, AND HIS AGENTS, IS NOT RESPONSIBLE FOR THE ACCURACY OF THE COORDINATES FURNISHED. THE CONTRACTOR IS REQUIRED TO VERIFY ALL THE COORDINATES FOR ACCURACY.

3. COORDINATES PROVIDED INDICATE THE DESIGN INTENT OF THE LANDSCAPE ARCHITECT. THE CONTRACTOR SHALL NOTIFY THE LANDSCAPE ARCHITECT OF ANY INCONSISTENCIES OR DISCREPANCIES FOUND DURING CONSTRUCTION. THE CONTRACTOR SHALL VERIFY ALL COORDINATES DURING CONSTRUCTION LAYOUT PRIOR TO THE COMMENCEMENT OF CONSTRUCTION.

4. THE CONTRACTOR SHALL REFER TO BUILDING PLANS FOR ACTUAL BUILDING DIMENSIONS AND FOR DETAILED DIMENSIONING OF ENTRANCE FEATURES.

5. WRITTEN DIMENSIONS AND COORDINATES SHALL GOVERN OVER SCALED DRAWINGS.

6. ALL IMPROVEMENTS SHALL BE STAKED IN THE FIELD BY THE CONTRACTOR AND APPROVED BY THE OWNER PRIOR TO CONSTRUCTION.

7. ALL CONSTRUCTION WILL CONFORM TO CITY OF SAN ANTONIO STANDARDS AND SPECIFICATIONS.

8. ALL DIMENSIONS SHOWN ARE TO FACE OF CURB, FACE OF WALL, OR FACE OF BUILDING UNLESS OTHERWISE NOTED.

9. ALL NORTHING AND EASTING COORDINATE POINTS ARE TO BE THE CENTERPOINT, CORNER INTERSECTION, CENTER OF POLE, FENCE POST OR SIGN AND ALONG THE DESIGNATED CENTERLINES UNLESS OTHERWISE NOTED, REFER TO SHEET _____ FOR CURVE DATA & COORDINATES.

10. THE CONTRACTOR SHALL COORDINATE INSTALLATION OF ALL SIGNS, PAVEMENT MARKINGS AND OTHER TRAFFIC CONTROL DEVICES WITH OTHER CONTRACTORS ON SITE.

11. LAYOUT AND GRADING FOR THE IMPROVEMENTS SHALL OCCUR AS DIRECTED BY THE LANDSCAPE ARCHITECT WITH THE FOLLOWING GUIDELINES:

    - ALL WALKS SHALL HAVE A MAXIMUM CROSS SLOPE OF 2% (1:48) IN THE DIRECTION OF THE DOWNHILL SIDE.
    - THE LONGITUDINAL SLOPE OF THE WALKS SHALL BE NO GREATER THAN 5% (1:20) UNLESS OTHERWISE NOTED.
    - ALL GRADES SHALL BE FINISHED TO A SMOOTH, FLOWING CONTOUR, MAINTAINING EXISTING FLOW PATTERNS UNLESS DIRECTED OTHERWISE.

12. FIRE LANE REQUIREMENTS TO BE PER CITY OF **XXXX** STANDARDS. PAINT COLORS MAY VARY AND SHALL BE COORDINATED WITH LANDSCAPE ARCHITECT AND APPROVED BY FIRE MARSHAL PRIOR TO INSTALLATION.

13. THE CONTRACTOR SHALL VERIFY ALL BUILDING SETBACK LINES, EASEMENT LINES, AND VISIBILITY LINES IN THE FIELD PRIOR TO CONSTRUCTION.

14. TREE TRUNK LOCATIONS SHOWN ARE APPROXIMATE. IF LOCATIONS CONFLICT WITH ANY PROPOSED IMPROVEMENT, CONTRACTOR SHALL CONTACT LANDSCAPE ARCHITECT FOR DIRECTION PRIOR TO ANY CONSTRUCTION.

GRADING NOTES:

1. STRIP TOPSOIL TO A DEPTH NOT TO EXCEED 6" STOCKPILE AND REDISTRIBUTE TO GRADED AREAS ONCE ROUGH GRADING OPERATIONS ARE COMPLETE. STOCKPILE AREA TO BE APPROVED BY OWNER AND LANDSCAPE ARCHITECT PRIOR TO GRADING.

2. ALL PROPOSED GRADES INDICATED ARE FINISHED GRADES. THE PROPOSED PAVING IS SHOWN TO FINISHED GRADE AND THE CONTRACTOR IS RESPONSIBLE FOR EXCAVATING FOR IMPROVEMENTS AS PART OF THE OVERALL MASS GRADING.

3. ALL LAND FORMS AND SWALES SHALL BE GRADED TO BE A SMOOTH, FLOWING, ROUNDED SURFACE PROVIDING POSITIVE DRAINAGE AND VISUAL CONTINUITY.

4. CONTRACTOR IS RESPONSIBLE FOR REMOVAL OF ALL CLEARED BRUSH, DEBRIS, ETC. FROM WITHIN THE LIMITS OF CONSTRUCTION. DISPOSE OF MATERIAL OFF SITE.

5. EXISTING TREES WHICH ARE TO BE PRESERVED SHALL BE PROTECTED FROM DAMAGE DURING CONSTRUCTION. CONSTRUCTION EQUIPMENT SHALL NOT OPERATE, PARK OR BE STOPPED UNDER THE CANOPIES OF EXISTING TREES.

6. WHEN CLEARING FOR GRADING, THE CONTRACTOR SHALL COORDINATE TREE PRESERVATION WITH THE LANDSCAPE ARCHITECT AND OWNERS REPRESENTATIVE.

7. GRADING FOR THE IMPROVEMENTS SHALL OCCUR AS DIRECTED BY THE LANDSCAPE ARCHITECT WITH THE FOLLOWING GUIDELINES:

    - ALL WALKS SHALL HAVE A MAXIMUM CROSS SLOPE OF 2% (1:48) IN THE DIRECTION OF THE DOWNHILL SIDE.
    - THE LONGITUDINAL SLOPE OF THE WALKS SHALL BE NO GREATER THAN 5%. (1:20)
    - ALL GRADES SHALL BE FINISHED TO A SMOOTH, FLOWING CONTOUR, MAINTAINING EXISTING FLOW PATTERNS UNLESS DIRECTED OTHERWISE.

8. REFER TO EXISTING CONDITIONS AND REMOVAL ITEMS PLAN FOR SURVEY, BENCHMARKS, DEMOLITION, EXISTING TREE REMOVAL, AND CLEARING INFORMATION.

9. REFER TO LAYOUT SHEETS FOR LAYOUT INFORMATION.

10. REFER TO CIVIL FOR UTILITY INFORMATION.

11. CONTRACTOR IS RESPONSIBLE FOR THE LOCATION AND MARKING OF ALL EXISTING UNDERGROUND OR ABOVE GROUND UTILITIES WITHIN THE PROJECT AREA.

TREE PROTECTION NOTES:

1. A ROOT PROTECTION ZONE (RPZ) WILL BE ESTABLISHED AROUND EACH TREE TO BE PRESERVED. THE ROOT PROTECTION ZONE SHALL BE AN AREA DEFINED BY THE RADIUS EXTENDING OUTWARD FROM THE TRUNK OF THE TREE A DISTANCE OF ONE (1) LINEAR FOOT FOR EACH INCH DIAMETER INCH OF THE TREE. (I.E. A 10" TREE WILL HAVE A 10' RADIUS ROOT PROTECTION ZONE.)

2. AN **ORANGE MESH FENCE** DELINEATING THE RPZ SHALL BE ERECTED AND MAINTAINED UNTIL CONSTRUCTION IS COMPLETED.

3. WHERE CONSTRUCTION OCCURS WITHIN THE RPZ THE TREE PROTECTION FENCING IS TO BE SET 4' FROM THE NEW CONSTRUCTION.

4. TREE TRUNK PROTECTION IS REQUIRED FOR ALL TREE TRUNKS IN AREAS WHERE CONSTRUCTION OCCURS WITHIN THE ROOT PROTECTION ZONE.

5. ALL ROOTS LARGER THAN ONE-INCH DIAMETER ARE TO BE CUT CLEANLY AND OAK WOUNDS PAINTED WITH APPROVED TREE PAINT WITHIN 30 MINUTES.

6. NO EQUIPMENT, VEHICLES OR MATERIALS SHALL BE OPERATED OR STORED WITHIN THE ROOT PROTECTION ZONE.

7. NO CLEAN-OUT AREAS WILL BE CONSTRUCTED SO THAT MATERIAL WILL BE IN OR MIGRATE TO THE ROOT PROTECTION ZONE.

8. NO GRADE CHANGES MORE THAN 3" IS ALLOWED WITHIN THE ROOT PROTECTION ZONE.

3. RPZ SHALL BE SUSTAINED IN A NATURAL STATE AND SHALL BE FREE FROM VEHICULAR OR MECHANICAL TRAFFIC.

4. THE RPZ SHALL BE COVERED WITH MULCH TO REDUCE MOISTURE STRESS. **MULCH LOCATION AND AMOUNT SHALL COMPLY WITH CITY OF SAN ANTONIO UNIFIED DEVELOPMENT CODE, SECTION 35-523 (J)(1) OR AS APPROVED BY CITY ARBORIST.**

5. ROOTS OR BRANCHES IN CONFLICT WITH CONSTRUCTION SHALL BE CUT CLEANLY ACCORDING TO PROPER PRUNING METHODS. ALL OAK WOUNDS SHALL BE PAINTED WITHIN 30 MINUTES TO PREVENT OAK WILT INFECTION.

8. THE RPZ SHALL REMAIN PERVIOUS, I.E. GROUNDCOVER OR TURF AT COMPLETION OF LANDSCAPE INSTALLATION.

9. THE ASSOCIATED TREE PROTECTION DETAIL COMPLIES WITH THE MINIMUM TREE PROTECTION GUIDELINES FROM THE CITY OF SAN ANTONIO. WHERE POSSIBLE, PROVIDE FENCE TO TREE DRIP LINE OR GROUP TREES IN FENCE PERIMETER TO PROVIDE INCREASED PROTECTION.

10. SHRED (DOUBLE GRIND) TREES AND UNDERSTORY VEGETATION TO BE REMOVED FOR USE AS SHREDDED NATIVE BARK MULCH. IMPORT SHREDDED NATIVE BARK MULCH AS NECESSARY TO FULFILL THE REQUIREMENTS OF THE CONTRACT.

11. NO WORK SHALL BEGIN IN AREAS WHERE TREE PRESERVATION AND TREATMENT MEASURES HAVE NOT BEEN COMPLETED AND APPROVED.

12. TREES WHICH ARE DAMAGED OR LOST DUE TO THE CONTRACTOR'S NEGLIGENCE DURING CONSTRUCTION SHALL BE MITIGATED PER UDC 35-523 (F) MITIGATION.

13. TREES MUST BE MAINTAINED IN GOOD HEALTH THROUGHOUT THE CONSTRUCTION PROCESS. MAINTENANCE MAY INCLUDE BUT IS NOT LIMITED TO: WATERING THE ROOT PROTECTION ZONE, WASHING FOLIAGE, FERTILIZATION, PRUNING, ADDITIONAL MULCH APPLICATIONS AND OTHER MAINTENANCE AS NEEDED ON THE PROJECT.

14. ROOTS SHALL BE CUT WITH A ROCK SAW OR BY HAND, NOT BY AN EXCAVATOR OR OTHER ROAD CONSTRUCTION EQUIPMENT.

DEMOLITION NOTES:

1. CONTRACTOR TO REPAIR ANY DAMAGED AREAS TO EXISTING (PRIOR TO DEMOLITION) OR BETTER CONDITIONS. CONTRACTOR SHALL BE RESPONSIBLE FOR REMOVAL OF ALL CLEARED BRUSH, DEBRIS, CONCRETE, ETC. FROM WITHIN THE LIMITS OF CONSTRUCTION AND MATERIAL SHALL BE DISPOSED OF OFF SITE.

2. CONTRACTOR TO VERIFY PRESENCE OF HAZARDOUS MATERIAL IN DEMOLITION OF EXISTING STRUCTURES. ANY HAZARDOUS MATERIAL TO BE REMOVED IN ACCORDANCE WITH ALL NATIONAL AND CONTRACTOR TO VERIFY PRESENCE OF HAZARDOUS MATERIAL IN DEMOLITION OF EXISTING STRUCTURES. ANY HAZARDOUS MATERIAL TO BE REMOVED IN ACCORDANCE WITH ALL NATIONAL AND GOVERNMENTAL REGULATIONS AND BEST PRACTICES (OSHA, ASTM, ETC).

3. REMOVE TREES: REMOVE TREES BELOW FINISH GRADE. FILL AND COMPACT ALL HOLES WITH APPROVED FILL MATERIAL TO FLUSH WITH SURROUNDING GRADES. REPAIR ANY DAMAGED AREAS TO EXISTING (PRIOR TO DEMOLITION) OR BETTER CONDITIONS.

4. COORDINATE ALL DEMOLITION AND CONSTRUCTION ACTIVITIES PRIOR TO COMMENCEMENT WITH CITY STAFF TO ENSURE SAFETY OF PATRONS.

5. CONTRACTOR SHALL DETERMINE LOCATIONS AND EXTENT OF ALL EXISTING SITE UTILITIES PRIOR TO COMMENCEMENT OF WORK.

6. PROTECT IN PLACE ALL ITEMS NOT SCHEDULED TO BE REMOVED OR RELOCATED, INCLUDING VEGETATION; HOSE BIBBS AND OTHER UTILITIES.

7. CONTRACTOR SHALL ERECT LIMITS OF WORK BARRICADES SO THAT PEDESTRIAN CIRCULATION MAY CONTINUE UNINTERRUPTED.

8. REFERENCE DETAIL FOR TREE PROTECTION FENCING. INSTALL TREE PROTECTION FENCING BEFORE DEMOLITION COMMENCES.

DETAIL LEGEND:

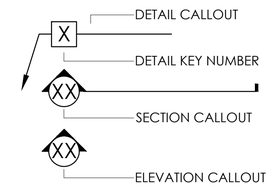

ABBREVIATIONS:

ALUM	Aluminum
BC	Bottom of Curb
BM	Benchmark
BR	Bottom of Ramp
BW	Bottom of Wall
CAL	Caliper
CL	Centerline
CMU	Concrete Masonry Unit
CONC	Concrete
CONT	Container
CY	Cubic Yard
DEG	Degree
DI	Drain Inlet
DIA	Diameter
DWG(S)	Drawing(s)
EA	Each
ELEV	Elevation
EJ	Expansion Joint
EX	Existing
FF	Finish Floor Elevation
FG	Finish Grade
FT	Feet
HP	High Point
HT	Height
IN	Inches
INV	Invert Grade
IRRIG	Irrigation
LP	Low Point
MAX	Maximum
MDD	Maximum Dry Density
MIN	Minimum
NIC	Not In Contract or Not Included
NTS	Not To Scale
OC	On Center
OCEW	On Center Each Way
PC	Point of Curvature
PL	Property Line
PRC	Point of Return Curvature
PT	Point of Tangency
PSI	Pounds Per Square Inch
PTD	Painted
R	Radius
REF	Refer To
ROW	Right Of Way
RP	Radius Point
SEC	Section
SF	Square Foot
SIM	Similar
STL	Steel
ST STL	Stainless Steel
STRUCT	Structural
SY	Square Yard
TC	Top of Curb
TF	Top of Footing
TR	Top of Ramp
TW	Top of Wall
TYP	Typical
W/	With
W/O	Without

95% REVIEW SET

REVISIONS

NO.	DATE	DESCRIPTION

GENERAL NOTES

DUNAWAY
118 Broadway • Suite 201 • San Antonio, Texas 78205
Tel: (210) 232-2246
(TX REG. F-1114)

CITY OF SAN ANTONIO
PIPERS MEADOW PARK
SAN ANTONIO, TEXAS

PRELIMINARY
FOR REVIEW ONLY
These documents are for Design Review and not intended for Construction, Bidding or Permit Purposes. They were prepared by, or under the supervision of:
Bryan Kye Mask
L.A.# 2369

JOB NO.	3677.006
DESIGNED BY:	TL
DRAWN BY:	TL
CHECKED BY:	JM
DATE:	March 7, 2019
SHEET:	0.01

PLOTTED BY: WEDNESDAY, FEBRUARY 27, 2019
PLOTTED AT: 2:04:05 PM
PLOTTED WITH: AutoCAD PDF (High Quality Print).pc3

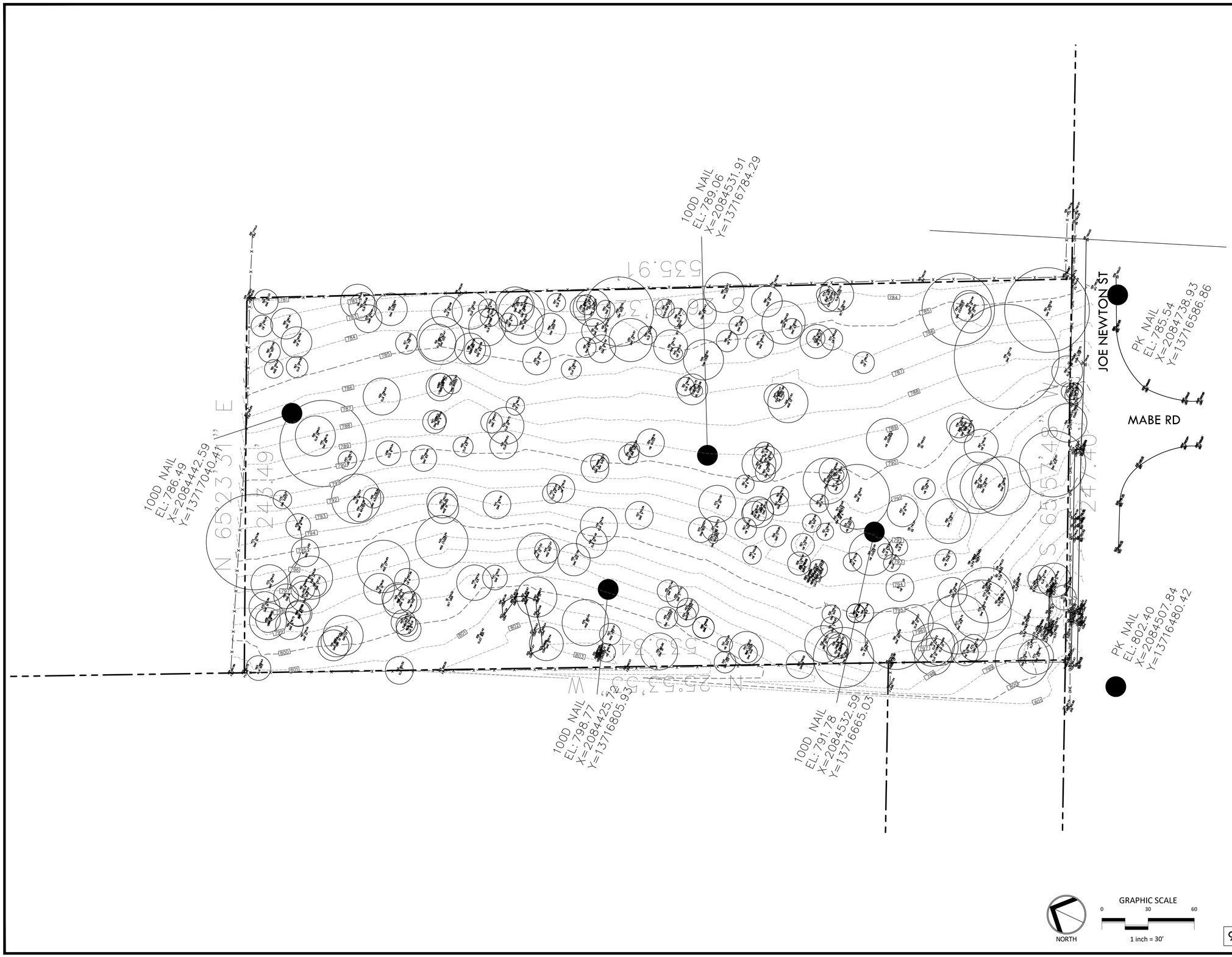

95% REVIEW SET

REVISIONS		
NO.	DATE	DESCRIPTION

EXISTING CONDITIONS

DUNAWAY
118 Broadway • Suite 201 • San Antonio, Texas 78205
Tel: 210.267.5246
(TX REG. F-1114)

CITY OF SAN ANTONIO
PIPERS MEADOW PARK
SAN ANTONIO, TEXAS

PRELIMINARY
FOR REVIEW ONLY
These documents are for Design Review and not intended for Construction, Bidding or Permit Purposes. They were prepared by, or under the supervision of:
Bryan Kye Mask
L.A.# 2369

JOB NO.	3677.006
DESIGNED BY:	TL
DRAWN BY:	EO
CHECKED BY:	JM
DATE:	March 7, 2019
SHEET:	L0.02

FULL PATH: C:\Production\00\00\00\3677\006\PLAD\Drawings\Plot Sheets_Production\00\00\00\3677\006\PLAD\Drawings\Plot Sheets\3677.006-Survey

FILENAME: 3677.006-Survey.dwg
PLOTTED BY: Edgar Ortega
PLOTTED ON: Thursday, January 28, 2019
PLOTTED AT: 10:55:15 AM
PLOTTED WITH: DWG To PDF.pc3

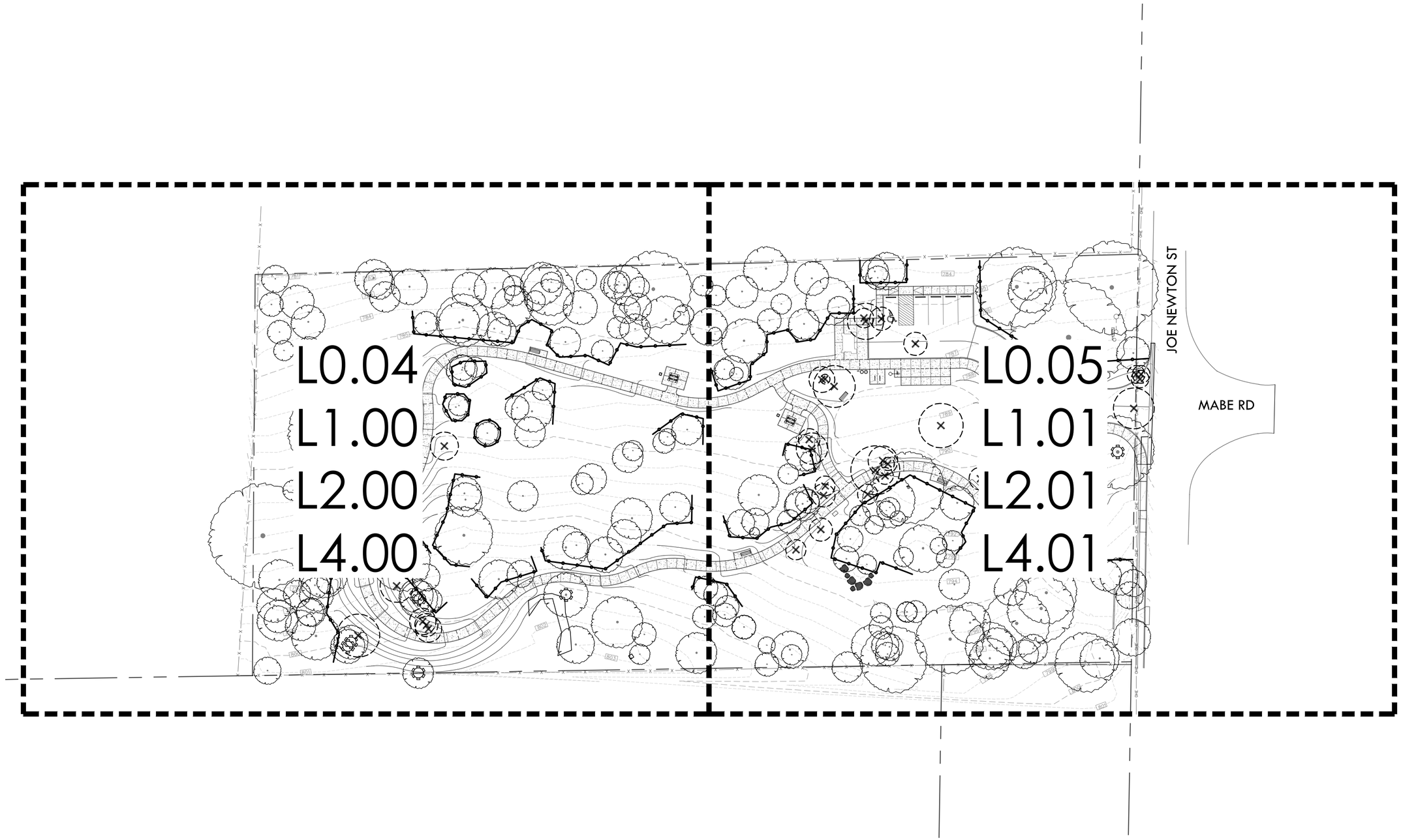

NORTH

GRAPHIC SCALE

0 30 60

1 inch = 30'

95% REVIEW SET

REVISIONS

NO.	DATE	DESCRIPTION

SITE REFERENCE PLAN

CITY OF SAN ANTONIO
PIPERS MEADOW PARK
SAN ANTONIO, TEXAS

DUNAWAY
118 Broadway • Suite 201 • San Antonio, Texas 78205
tel: 210.267.5246
(TX REG. F-1114)

PRELIMINARY
FOR REVIEW ONLY
These documents are for Design Review and not intended for Construction, Bidding or Permit Purposes. They were prepared by, or under the supervision of:
Bryan Kye Mask
L.A.# 2369

JOB NO.	3677.006
DESIGNED BY:	TL
DRAWN BY:	EO
CHECKED BY:	JM
DATE:	March 7, 2019
SHEET:	L0.03

FULL PATH: G:\Production\3000\3600\3677\3600\PLA\Drawings\Plot Sheets\Phase\3677.006-Ex Conditions Plan

FILENAME: 3677.006-Ex Conditions Plan.dwg
PLOTTED BY: Edgar Ortega
PLOTTED ON: Thursday, February 28, 2019
PLOTTED AT: 12:39:57 PM
PLOTTED WITH: AutoCAD PDF (High Quality Print).pc3

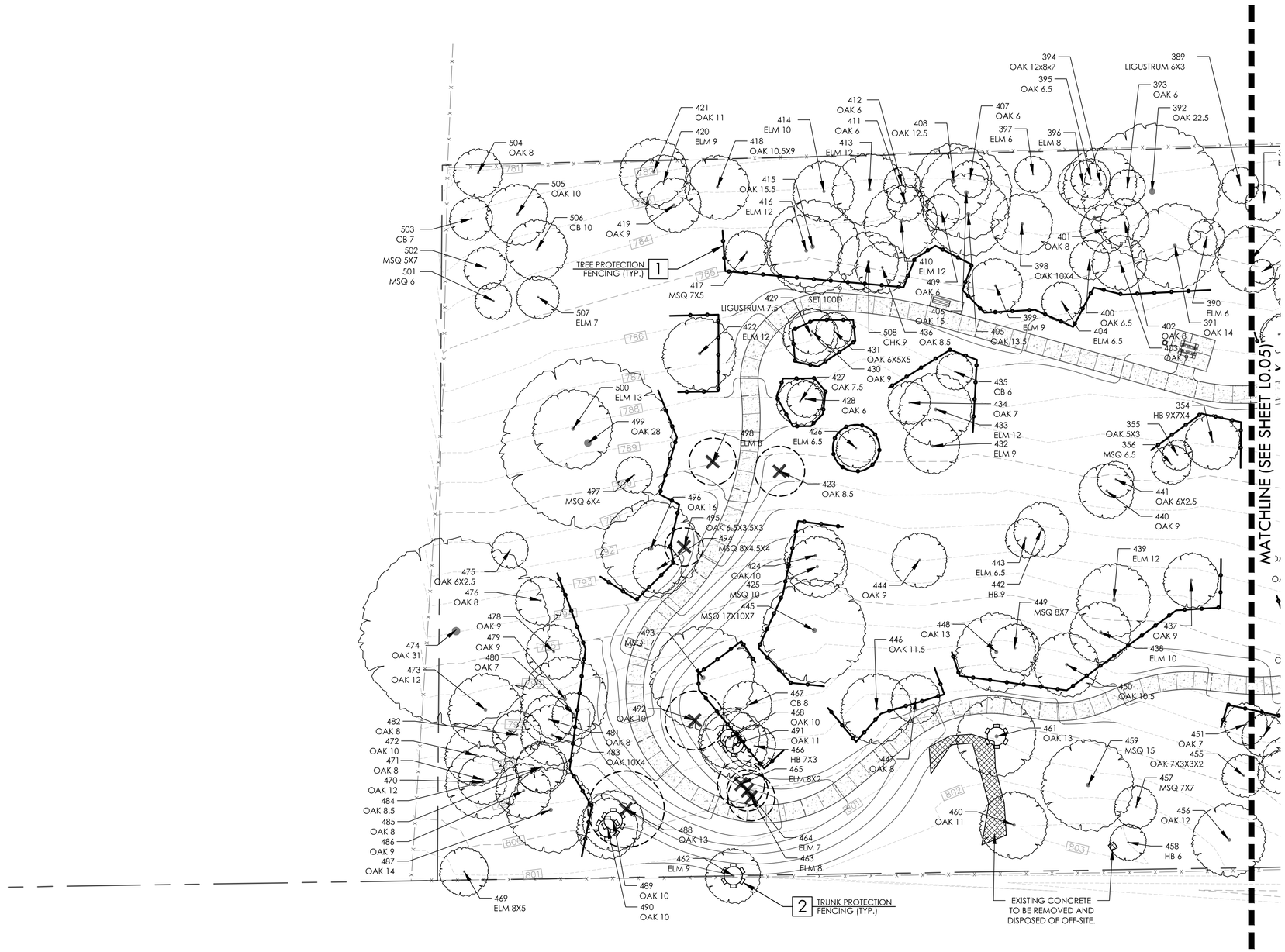

LEGEND

PROPERTY LINE

EXISTING FENCE LINE

OVERHEAD ELECTRIC — OHE —

CONCRETE TO BE REMOVED AND DISPOSED OF OFF-SITE

TRUNK PROTECTION FENCING

TREE PROTECTION FENCING

EXISTING TREE TO REMAIN

EXISTING TREE TO BE REMOVED

LANDSCAPE CONSTRUCTION LEGEND			
KEY	DESCRIPTION	DETAIL NO:	DETAIL SHEET:
1	TREE PROTECTION FENCING	A	L0.07
2	TRUNK PROTECTION FENCING	B	L0.07

NORTH

GRAPHIC SCALE
0 20 40
1 inch = 20'

95% REVIEW SET

REVISIONS

NO.	DATE	DESCRIPTION

TREE PRESERVATION PLAN

DUNAWAY
118 Broadway • Suite 201 • San Antonio, Texas 78205
Tel: 210.267.5246
(TX REG. F-1114)

CITY OF SAN ANTONIO
PIPERS MEADOW PARK
SAN ANTONIO, TEXAS

PRELIMINARY
FOR REVIEW ONLY
These documents are for Design Review and not intended for Construction, Bidding or Permit Purposes. They were prepared by, or under the supervision of:
Bryan Kye Mask
L.A.# 2369

JOB NO.	3677.006
DESIGNED BY:	TL
DRAWN BY:	EO
CHECKED BY:	JM
DATE:	March 7, 2019
SHEET:	L0.04

FULL PATH: G:\Production\0010\0300\3677\006\PLAD\Drawing\Plot Sheets\"(Production\0010\0300\3677\006\PLAD\Drawing\Plot Sheets\3677.006-Ex Conditions Plan

FILENAME: 3677.006-Ex Conditions Plan.dwg
PLOTTED BY: Edgar Ortega
PLOTTED ON: Thursday, February 28, 2019
PLOTTED AT: 12:40:51 PM
PLOTTED WITH: AutoCAD PDF (High Quality Print).pc3

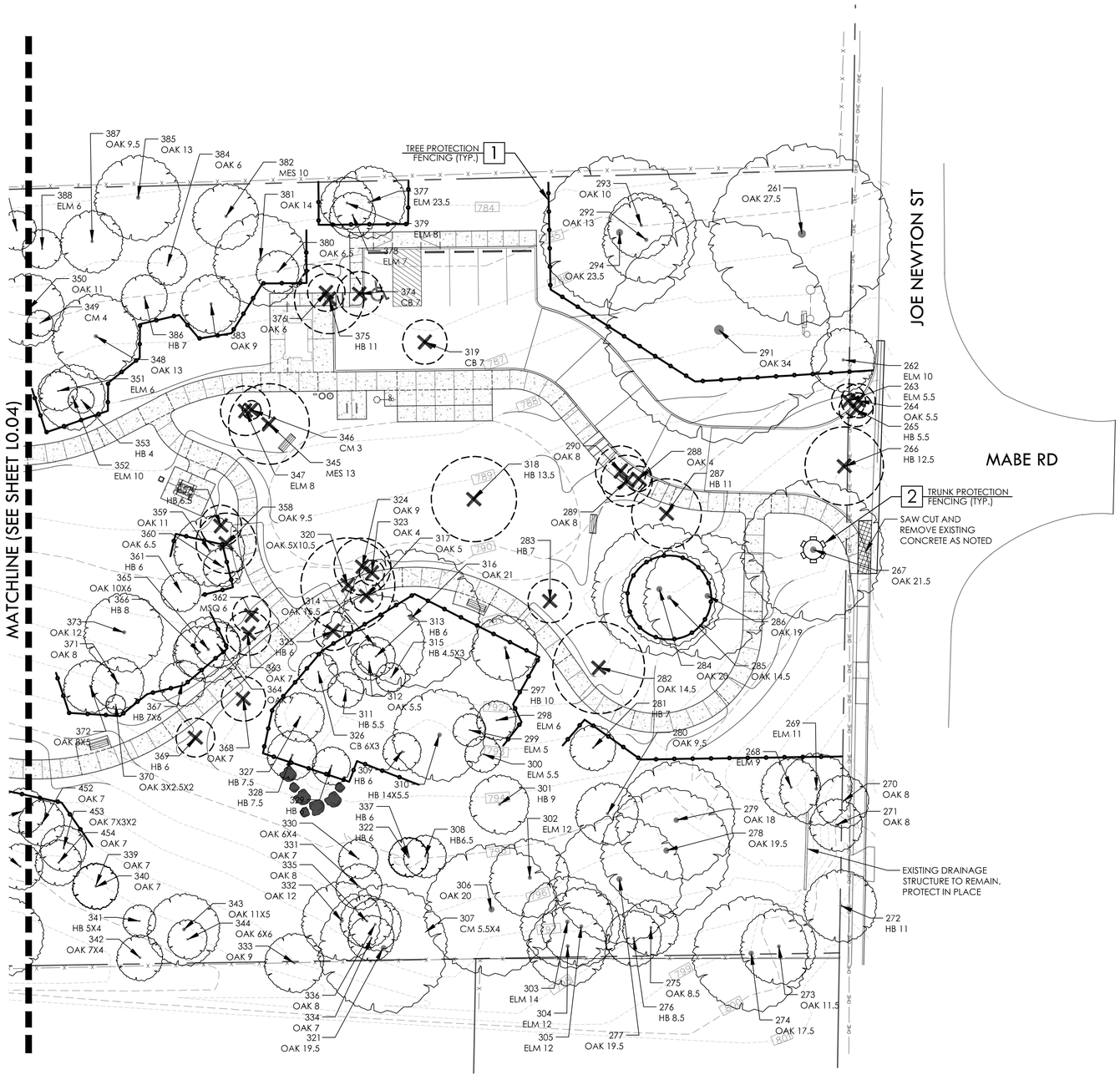

LEGEND

PROPERTY LINE

EXISTING FENCE LINE

OVERHEAD ELECTRIC

CONCRETE TO BE REMOVED AND DISPOSED OF OFF-SITE

TRUNK PROTECTION FENCING

TREE PROTECTION FENCING

EXISTING TREE TO REMAIN

EXISTING TREE TO BE REMOVED

LANDSCAPE CONSTRUCTION LEGEND

KEY	DESCRIPTION	DETAIL NO:	DETAIL SHEET:
1	TREE PROTECTION FENCING	A	L0.07
2	TRUNK PROTECTION FENCING	B	L0.07

NORTH

GRAPHIC SCALE

0 20 40

1 inch = 20'

95% REVIEW SET

REVISIONS

NO.	DATE	DESCRIPTION

TREE PRESERVATION PLAN

CITY OF SAN ANTONIO
PIPERS MEADOW PARK
SAN ANTONIO, TEXAS

DUNAWAY
118 Broadway • Suite 201 • San Antonio, Texas 78205
tel: 210.267.5246
(TX REG. F-1114)

PRELIMINARY
FOR REVIEW ONLY
These documents are for Design Review and not intended for Construction, Bidding or Permit Purposes. They were prepared by, or under the supervision of:
Bryan Kye Mask
L.A.# 2369

JOB NO.	3677.006
DESIGNED BY:	TL
DRAWN BY:	EO
CHECKED BY:	JM
DATE:	March 7, 2019
SHEET:	L0.05

FULL PATH: G:\Production\3000\3600\3677\3600\PLAD\Drawings\Plot Sheets\Phase\3677.006-Ex Conditions Plan
FILENAME: 3677.006-Ex Conditions Plan.dwg
PLOTTED BY: Edgar Ortega
PLOTTED ON: Thursday, February 28, 2019
PLOTTED AT: 12:40:06 PM
PLOTTED WITH: AutoCAD (High Quality Print).pc3

EXISTING TREE INVENTORY

PT#	Species	Understory Species* 5.0" - 11.5" Removed	Understory Species* 5.0" - 11.5" Preserved	Significant Tree 6" - 23.5" Removed	Significant Tree 6" - 23.5" Preserved	Significant Tree** 10.0" - 23.5" Removed	Significant Tree** 10.0" - 23.5" Preserved	Heritage 3:1 Removed	Heritage 3:1 Preserved	Heritage 1:1 Removed	Heritage 1:1 Preserved	Additional Inches Preserved for Mitigation *** Preserved
261	OAK										27.5	
262	ELM				10							
263	ELM											5.5
264	OAK											
265	HACKBERRY											
266	HACKBERRY					12.5						
267	OAK				21.5							
268	ELM				9							
269	ELM				11							
270	OAK				8							
271	OAK				8							
272	HACKBERRY						11					
273	OAK				11.5							
274	OAK				17.5							
275	OAK				8.5							
276	HACKBERRY				8.5							
277	OAK				19.5							
278	OAK				19.5							
279	OAK				18							
280	OAK				9.5							
281	HACKBERRY											7
282	OAK			14.5								
283	HACKBERRY											
284	OAK				20							
285	OAK				14.5							
286	OAK				19							
287	HACKBERRY					11						
288	OAK											
289	OAK			8								
290	OAK			8								
291	OAK										34	
292	OAK				13							
293	OAK				10							
294	OAK				23.5							
295	NOT USED											
296	NOT USED											
297	HACKBERRY						10					
298	ELM				6							
299	ELM											5
300	ELM											5.5
301	HACKBERRY											9
302	ELM				12							
303	ELM				14							
304	ELM				12							
305	ELM				12							
306	OAK				20							
307	CRAPE MYRTLE											5.5
308	HACKBERRY											6.5
309	HACKBERRY											6
310	HACKBERRY						14					
311	HACKBERRY											5.5
312	OAK											5.5
313	HACKBERRY											6
314	OAK				15.5							
315	HACKBERRY											4.5
316	OAK				21							
317	OAK											
318	HACKBERRY					13.5						
319	CHINABERRY											INVASIVE
320	OAK			10.5								
321	OAK				19.5							
322	HACKBERRY											
323	OAK											
324	OAK			9								
325	HACKBERRY											
326	CHINABERRY											INVASIVE
327	HACKBERRY											7.5
328	HACKBERRY											7.5
329	HACKBERRY											6
330	OAK				6							
331	OAK				7							
332	OAK				12							
333	OAK				9							
334	OAK				7							
335	OAK				8							
336	OAK				8							
337	HACKBERRY											6
338	NOT USED											
339	OAK				9							
340	OAK				7							
341	HACKBERRY											5
342	OAK				7							
343	OAK				11							
344	OAK				6							
345	MESQUITE					13						
346	CRAPE MYRTLE											
347	ELM			8								
348	OAK				13							
349	CRAPE MYRTLE											4
350	OAK				11							
351	ELM				6							
352	ELM				10							
353	HACKBERRY											4
354	HACKBERRY											9
355	OAK											5
356	MESQUITE											6.5
357	HACKBERRY											
358	OAK			9.5								
359	OAK				11							
360	OAK				6.5							
361	HACKBERRY											6
362	MESQUITE											5
363	OAK				7							
364	OAK				7							
365	OAK				10							
366	HACKBERRY											8
367	HACKBERRY											7
368	OAK			7								
369	HACKBERRY											
370	OAK											3
371	OAK				8							
372	OAK				8							
373	OAK				12							
374	CHINABERRY											INVASIVE
375	HACKBERRY						11					
376	OAK			6								
377	ELM				23.5							
378	ELM				7							
379	ELM				8							
380	OAK				6.5							
381	OAK				14							
382	MESQUITE						10					
383	OAK				9							
384	OAK				6							
385	OAK				13							
386	HACKBERRY											7
387	OAK				9.5							
388	ELM				6							
389	LIGUSTRUM				6							
390	ELM				6							
391	OAK				14							
392	OAK				22.5							
393	OAK				6							
394	OAK				12							
395	OAK				6.5							
396	ELM				8							
397	ELM				6							
398	OAK				10							
399	ELM				9							
400	OAK				6.5							
401	OAK				8							
402	OAK				8							
403	OAK				9							
404	OAK				6.5							
405	OAK				13.5							
406	OAK				15							
407	OAK				6							
408	OAK				12.5							
409	OAK				6							
410	ELM				12							
411	OAK				6							
412	OAK				6							
413	ELM				12							
414	ELM				10							
415	OAK				15.5							
416	ELM				12							
417	MESQUITE											7
418	OAK				10.5							
419	OAK				9							
420	ELM				9							
421	OAK				11							
422	ELM				12							
423	OAK			8.5								
424	OAK				10							
425	MESQUITE						10					
426	ELM				6.5							
427	OAK				7.5							
428	OAK				6							
429	LIGUSTRUM				7.5							
430	OAK				9							
431	OAK				6							
432	ELM				9							
433	ELM				12							
434	OAK				7							
435	CHINABERRY											INVASIVE
436	OAK				8.5							
437	OAK				9							
438	ELM				10							
439	ELM				12							
440	OAK				9							
441	OAK				6							
442	HACKBERRY											9
443	ELM				6.5							
444	OAK				9							
445	MESQUITE						17					
446	OAK				11.5							
447	OAK				8							
448	OAK				13							
449	MESQUITE											8
450	OAK				10.5							
451	OAK				7							
452	OAK				7							
453	OAK				7							
454	OAK				7							
455	OAK				7							
456	OAK				12							
457	MESQUITE											7
458	HACKBERRY											6
459	MESQUITE						15					
460	OAK				11							
461	OAK				13							
462	ELM				9							
463	ELM			8								
464	ELM			7								
465	ELM			8								
466	HACKBERRY											7
467	CHINABERRY											INVASIVE
468	OAK				10							
469	ELM				8							
470	OAK				12							
471	OAK				8							
472	OAK				10							
473	OAK				12							
474	OAK								31			
475	OAK				6							
476	OAK				8							
477	NOT USED											
478	OAK				9							
479	OAK				9							
480	OAK				7							
481	OAK				8							
482	OAK				8							
483	OAK				10							
484	OAK				8.5							
485	OAK				8							
486	OAK				9							
487	OAK				14							
488	OAK			13								
489	OAK				10							
490	OAK				10							
491	OAK				11							
492	OAK			10								
493	MESQUITE						17					
494	MESQUITE											8
495	OAK			6.5								
496	OAK				16							
497	MESQUITE											6
498	ELM			8								
499	OAK				28							
500	ELM				13							
501	MESQUITE											6
502	MESQUITE											7
503	CHINABERRY											INVASIVE
504	OAK				8							
505	OAK				10							
506	CHINABERRY											INVASIVE
507	ELM				7							
508	CHK				9							
Sub. Tot. Inches		0	0	149.5	1603	61	104	0	31	0	61.5	239
Total inches by category=			0		1752.5		165		31		61.5	

Preservation percentage=	#DIV/0!	Significant	89%	Heritage Preservation	100% 239
Mitigation required (Commercial) =	0	Commercial (inches)	-940		
Mitigation required (Capital Imp.) =	0	Capital Imp. (inches)	-1227.63	Heritage Mitigation (inches)	0

No category to fall below 10% preservation;
Preserved- Tree to remain that meets root protection zone requirements described in section 35-523 of the UDC.
Mitigation 1:1 for significant trees below minimum preservation requirements; 3:1 for heritage trees below 100%
** Small species: Condalia, Redbud, Tx. Mountain Laurel, Tx. Persimmon, Hawthorn, Possumhaw - these are mitigated at 1:1 for Heritage Trees*
*** Ashe Juniper, Huisache, Mesquite, Arizona Ash, Hackberry protected at 10" dbh and mitigated at 1:1 for heritage trees*
**** Mitigation Trees: Unprotected-sized trees to be used for mitigation calculations; subtract inches from mitigation owed*

ADDITIONAL CHARTS AS REQUIRED BY CITY

FINAL CANOPY COVERAGE

Developments of all site must provide a minimum final tree canopy cover as listed below for the entire gross project area outside the regulatory floodplain.

A. Single Family Residential	38%	
B. Multi-Family and Nonresidential	25%	
C. CRAG Area	15%	
Lot Size	131,155	S.F.
Canopy Required (25%)	32,789	S.F.
Existing Trees		
37 Cedar Elm (875 SF/Each)	32,375	
27 Hackberry (875 SF/Each)	23,625	
14 Mesquite (275 SF/Each)	3,850	
123 Live Oak (875 SF/Each)	107,625	
201		
Total Canopy Provided	167,475	S.F.
New Canopy Required	0	S.F.

MITIGATION SUMMARY

Mitigation Inches Necessary for Heritage Trees	0
Existing Significant Trees- Total Caliper Inches	2367.5
Required Significant Tree Preservation	40%
Significant Trees Preserved	89%

95% REVIEW SET

REVISIONS

NO.	DATE	DESCRIPTION

TREE INVENTORY AND REQUIREMENTS

DUNAWAY
118 Broadway • Suite 201 • San Antonio, Texas 78205
Tel: 210.267.5246
(TX REG. F-1114)

CITY OF SAN ANTONIO
PIPERS MEADOW PARK
SAN ANTONIO, TEXAS

PRELIMINARY
FOR REVIEW ONLY
These documents are for Design Review and not intended for Construction, Bidding or Permit Purposes. They were prepared by, or under the supervision of:
Bryan Kye Mask
L.A.# 2369

JOB NO.	3677.006
DESIGNED BY:	TL
DRAWN BY:	EO
CHECKED BY:	JM
DATE:	March 7, 2019
SHEET:	L0.06

FULL PATH: G:\Production\5000\3000\3677\006\PLAN\Drawing\Plot Sheets\(Production\5000\3000\3677\006\PLAN\Drawing\Plot Sheets\3677.006-fc-Conditions Plan
FILENAME: 3677.006-fc-Conditions Plan.dwg
PLOTTED BY: Edgar Ortega
PLOTTED ON: Thursday, February 28, 2019
PLOTTED AT: 12:46:13 pm
PLOTTED WITH: AutoCAD PDF (High Quality Print).pc3

TREE PROTECTION NOTES

1. ALL EXISTING TREES DEPICTED TO REMAIN SHALL BE PROTECTED AT THE ROOT PROTECTION ZONE(RPZ). THE RPZ SHALL BE DETERMINED BY TREE SIZE (RECOMMENDED 12" RADIUS FROM TRUNK FOR EVERY 1" IN DIAMETER OF TRUNK AT 4.5' FROM GROUND) WITH A MINIMUM 5' RADIUS FROM THE TRUNK.
2. AN ORANGE MESH FENCE DELINEATING THE RPZ SHALL BE ERECTED AND MAINTAINED UNTIL CONSTRUCTION IS COMPLETED.
3. RPZ SHALL BE SUSTAINED IN A NATURAL STATE AND SHALL BE FREE FROM VEHICULAR OR MECHANICAL TRAFFIC.
4. THE RPZ SHALL BE COVERED WITH MULCH TO REDUCE MOISTURE STRESS.
5. DURING CONSTRUCTION, NO EXCESS SOIL, ADDITIONAL FILL MATERIAL, EQUIPMENT, LIQUIDS, OR CONSTRUCTION DEBRIS SHALL BE PLACED INSIDE THE PROTECTION BARRIER, NOR SHALL ANY SOIL BE REMOVED FROM WITHIN THE BARRIER.
6. ANY DAMAGE DONE TO EXISTING TREE LIMBS OR ROOT SYSTEMS SHALL BE CUT CLEANLY IMMEDIATELY AFTER INJURY. ALL WOUNDS TO LIVE OAKS SHALL BE PAINTED WITH PRUNING PAINT WITHIN 30 MINUTES AFTER DAMAGE. ROOTS EXPOSED DURING CONSTRUCTION OPERATIONS WILL BE CUT CLEANLY.
7. THE PROPOSED FINISH GRADE AND ELEVATION OF LAND WITHIN THE RPZ OF ANY TREE TO BE PRESERVED SHALL NOT BE RAISED OR LOWERED MORE THAN THREE INCHES. WELLING AND RETAINING METHODS ARE ALLOWED OUTSIDE THE RPZ.
8. THE RPZ SHALL REMAIN PERVIOUS, I.E. GROUNDCOVER OR TURF AT COMPLETION OF LANDSCAPE INSTALLATION.
9. THE ASSOCIATED TREE PROTECTION DETAIL COMPLIES WITH THE MINIMUM TREE PROTECTION GUIDELINES FROM THE CITY OF SAN ANTONIO. WHERE POSSIBLE, PROVIDE FENCE TO TREE DRIP LINE OR GROUP TREES IN FENCE PERIMETER TO PROVIDE INCREASED PROTECTION.
10. SHRED (DOUBLE GRIND) TREES AND UNDERSTORY VEGETATION TO BE REMOVED FOR USE AS SHREDDED NATIVE BARK MULCH. IMPORT SHREDDED NATIVE BARK MULCH AS NECESSARY TO FULFILL THE REQUIREMENTS OF THE CONTRACT.
11. NO WORK SHALL BEGIN IN AREAS WHERE TREE PRESERVATION AND TREATMENT MEASURES HAVE NOT BEEN COMPLETED AND APPROVED.
12. TREES WHICH ARE DAMAGED OR LOST DUE TO THE CONTRACTOR'S NEGLIGENCE DURING CONSTRUCTION SHALL BE MITIGATED PER UDC 35-523 (f) MITIGATION.
13. TREES MUST BE MAINTAINED IN GOOD HEALTH THROUGHOUT THE CONSTRUCTION PROCESS. MAINTENANCE MAY INCLUDE BUT IS NOT LIMITED TO: WATERING THE ROOT PROTECTION ZONE, WASHING FOLIAGE, FERTILIZATION, PRUNING, ADDITIONAL MULCH APPLICATIONS AND OTHER MAINTENANCE AS NEEDED ON THE PROJECT.
14. ROOTS SHALL BE CUT WITH A ROCK SAW OR BY HAND, NOT BY AN EXCAVATOR OR OTHER ROAD CONSTRUCTION EQUIPMENT.

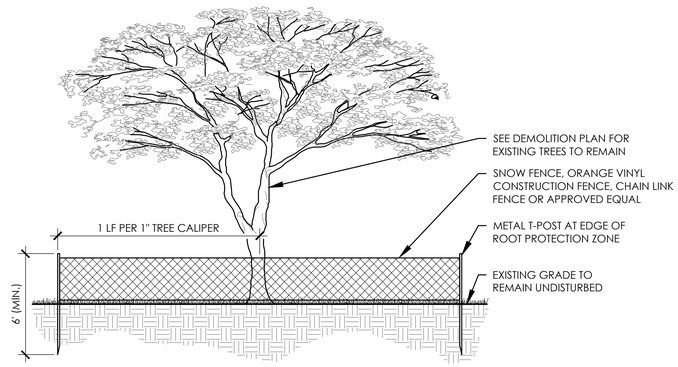

A **TREE PROTECTION FENCING** SCALE: N.T.S.

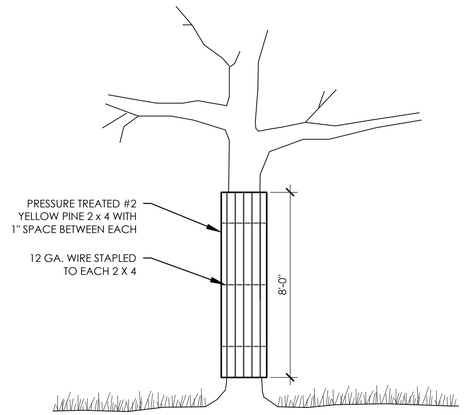

B **EXISTING TREE TRUNK PROTECTION** SCALE: 1"=1'-0"

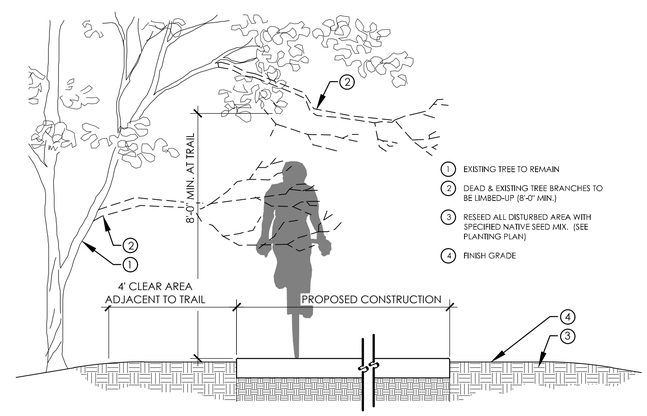

C **TREE PRUNING AT NEW CONSTRUCTION** SCALE: NTS

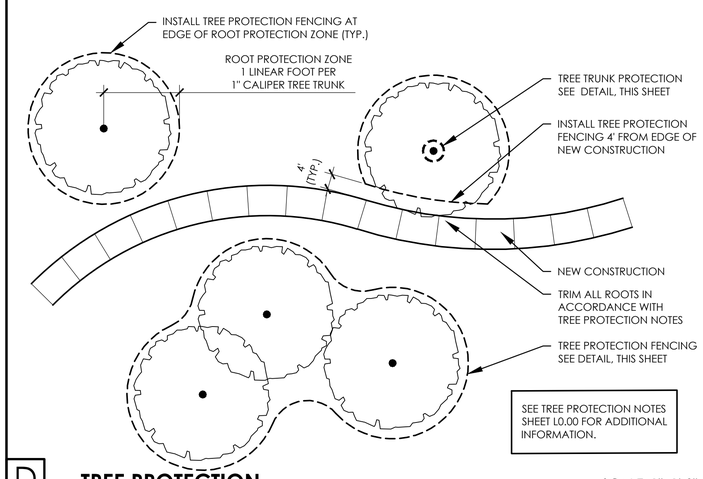

D **TREE PROTECTION** - CLOSE PROXIMITY TO CONSTRUCTION SCALE: 1"=1'-0"

95% REVIEW SET

REVISIONS

NO.	DATE	DESCRIPTION

TREE PRESERVATION NOTES & DETAILS

DUNAWAY
118 Broadway • Suite 201 • San Antonio, Texas 78205
tel: 210.267.5246
(TX REG. F-1114)

CITY OF SAN ANTONIO
PIPERS MEADOW PARK
SAN ANTONIO, TEXAS

PRELIMINARY
FOR REVIEW ONLY
These documents are for Design Review and not intended for Construction, Bidding or Permit Purposes. They were prepared by, or under the supervision of:
Bryan Kye Mask
L.A.# 2369

JOB NO.	3677.006
DESIGNED BY:	TL
DRAWN BY:	EO
CHECKED BY:	JM
DATE:	March 7, 2019
SHEET:	L0.07

FULL PATH: G:\Production\0500\0500\3677\3600\PLAN\Drawings\Plot Sheets\Production\0500\0500\3677\006\PLAN\Drawings\Plot Sheets\3677.006 Ex Conditions Plan
FILENAME: 3677.006 Ex Conditions Plan.dwg
PLOTTED BY: Edgar Ortega
PLOTTED ON: Thursday, February 28, 2019
PLOTTED AT: 12:40:11 PM
PLOTTED WITH: AutoCAD PDF (High Quality Print).pc3

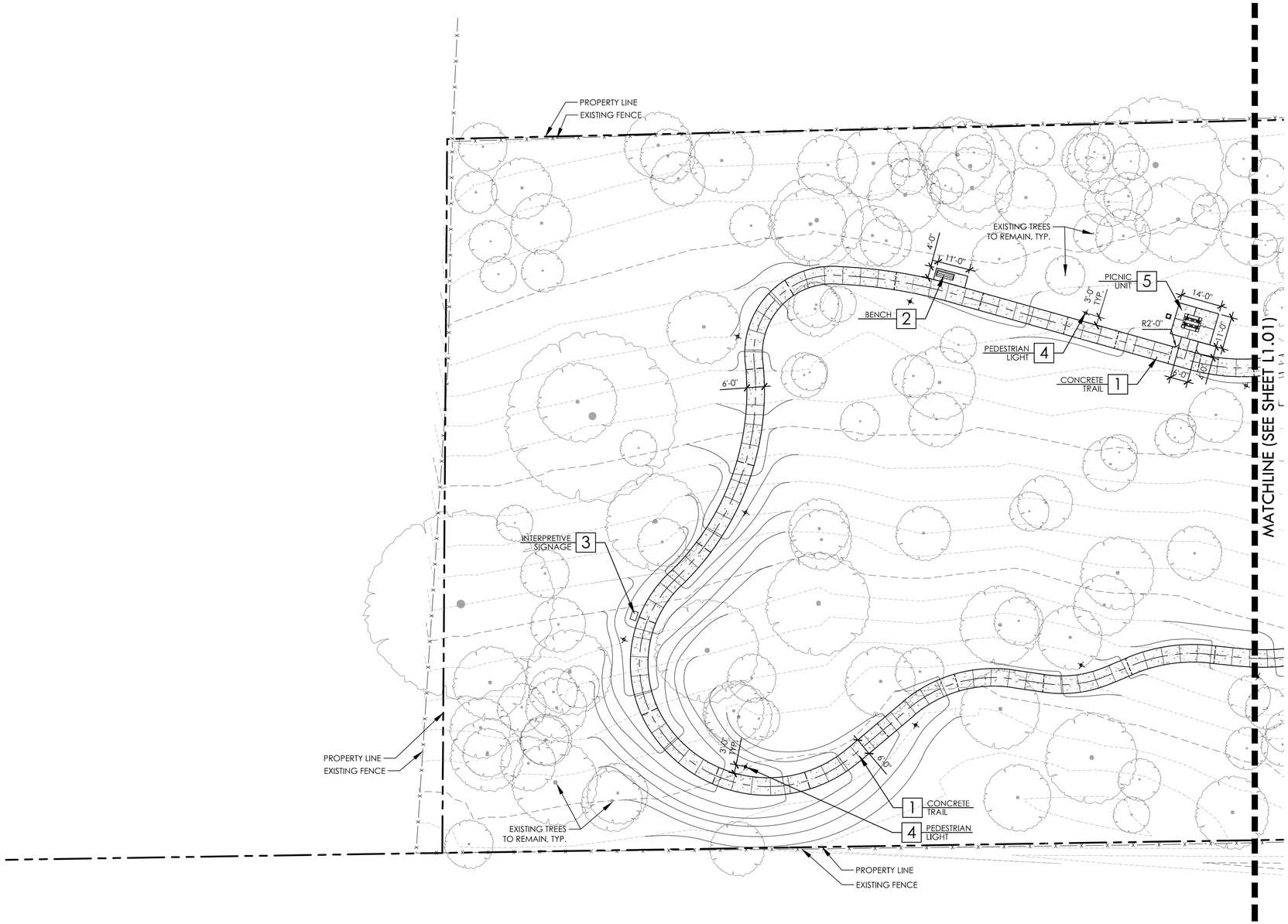

LEGEND

PROPERTY LINE	
LIMIT OF WORK	
DRIVE CENTER LINE	
FENCE LINE	
OVERHEAD ELECTRIC	OHE
TRAIL CENTERLINE	
FIRE LANE STRIPING	FL
EXISTING CONCRETE CURB	
EXPANSION JOINT	
CONTROL JOINT	
EXISTING CONTOUR	794
PROPOSED CONTOUR	795
TEMPORARY BENCHMARK LOCATION (TBM)	
EXISTING TREE TO REMAIN	

LANDSCAPE CONSTRUCTION LEGEND

KEY	DESCRIPTION	DETAIL NO:	DETAIL SHEET:
1	CONCRETE TRAIL	A	L3.01
2	BENCH	C	L3.03
3	INTERPRETIVE SIGNAGE	A	L3.04
4	PEDESTRIAN LIGHT	A	L3.05
5	PICNIC UNIT	D	L3.03
6	DRINKING FOUNTAIN	A	L3.03
7	SUMP	B	L3.03
8	RESTROOM ENCLOSURE	A	L3.06
9	CONCRETE CURB @ SIDEWALK	D	L3.01
10	ASPHALT PAVING	D	L3.01
11	PARKING LOT STRIPING	D	L3.02
12	WHEEL STOP	B	L3.02
13	CONCRETE TRAIL @ EXISTING CONC.	C	L3.01
14	PLAYGROUND SURFACE	H	L3.01
15	PLAYGROUND SURFACE @ CONC. SIDEWALK	G	L3.01
16	BIKE RACK	F	L3.03
17	SDEWALK BOX	F	L3.01
18	ACCESSIBLE RAMP	E	L3.01
19	TRASH RECEPTACLE	G	L3.03
20	PET WASTE STATION	H	L3.03
21	ASPHALT PAVING @ EXISTING ASPHALT	X	LX.XX

NORTH

GRAPHIC SCALE
0 20 40
1 inch = 20'

95% REVIEW SET

REVISIONS

NO.	DATE	DESCRIPTION

SITE PLAN

DUNAWAY
118 Broadway • Suite 201 • San Antonio, Texas 78205
Tel: 210.267.5246
(TX REG. F-1114)

CITY OF SAN ANTONIO
PIPERS MEADOW PARK
SAN ANTONIO, TEXAS

PRELIMINARY
FOR REVIEW ONLY
These documents are for Design Review and not intended for Construction, Bidding or Permit Purposes. They were prepared by, or under the supervision of:
Bryan Kye Mask
L.A.# 2369

JOB NO.	3677.006
DESIGNED BY:	TL
DRAWN BY:	EO
CHECKED BY:	BKM
DATE:	March 7, 2019
SHEET:	L1.00

FILE PATH: C:\Production\500\10\500\3677\006\PLAD\Drawings\Plot Sheets\Production\500\500\3677\006\PLAD\Drawings\Plot Sheets\3677.006-Layout Plan

FILENAME: 3677.006-Layout Plan.dwg
PLOTTED BY: Edgar Ortega
PLOTTED ON: Thursday, February 28, 2019
PLOTTED AT: 12:07:18 PM
PLOTTED WITH: AutoCAD PDF (High Quality Print).pc3

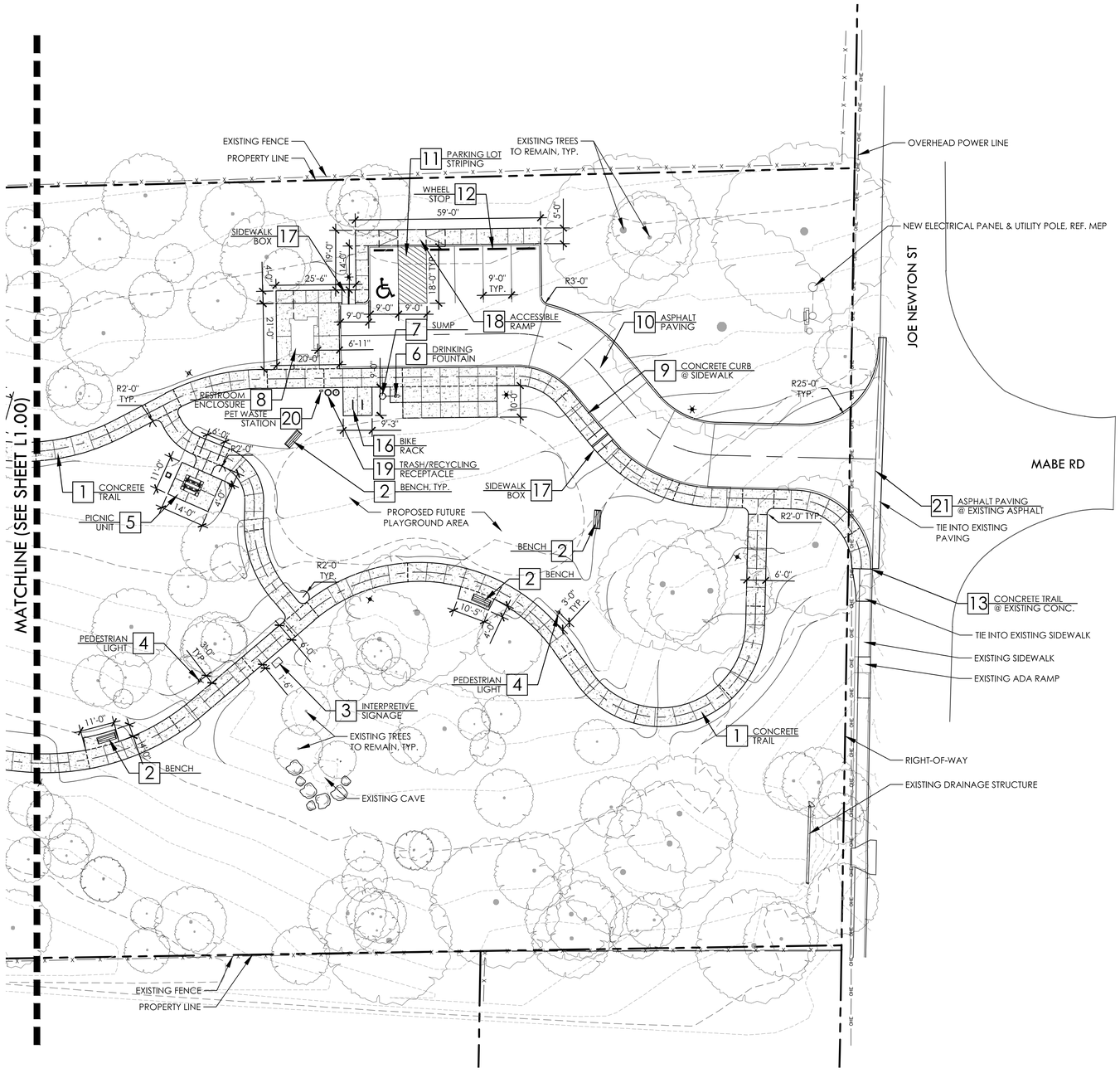

LEGEND

- PROPERTY LINE
- LIMIT OF WORK
- DRIVE CENTER LINE
- FENCE LINE
- OVERHEAD ELECTRIC — OHE
- TRAIL CENTERLINE
- FIRE LANE STRIPING — FL
- EXISTING CONCRETE CURB
- EXPANSION JOINT
- CONTROL JOINT
- EXISTING CONTOUR — 794
- PROPOSED CONTOUR — 795
- TEMPORARY BENCHMARK LOCATION (TBM)
- EXISTING TREE TO REMAIN

LANDSCAPE CONSTRUCTION LEGEND

KEY	DESCRIPTION	DETAIL NO:	DETAIL SHEET:
1	CONCRETE TRAIL	A	L3.01
2	BENCH	C	L3.03
3	INTERPRETIVE SIGNAGE	A	L3.04
4	PEDESTRIAN LIGHT	A	L3.05
5	PICNIC UNIT	D	L3.03
6	DRINKING FOUNTAIN	A	L3.03
7	SUMP	B	L3.03
8	RESTROOM ENCLOSURE	A	L3.06
9	CONCRETE CURB @ SIDEWALK	D	L3.01
10	ASPHALT PAVING	D	L3.01
11	PARKING LOT STRIPING	D	L3.02
12	WHEEL STOP	B	L3.02
13	CONCRETE TRAIL @ EXISTING CONC.	C	L3.01
14	PLAYGROUND SURFACE	H	L3.01
15	PLAYGROUND SURFACE @ CONC. SIDEWALK	G	L3.01
16	BIKE RACK	F	L3.03
17	SDEWALK BOX	F	L3.01
18	ACCESSIBLE RAMP	E	L3.01
19	TRASH RECEPTACLE	G	L3.03
20	PET WASTE STATION	H	L3.03
21	ASPHALT PAVING @ EXISTING ASPHALT	X	LX.XX

NORTH

GRAPHIC SCALE
0 20 40
1 inch = 20'

95% REVIEW SET

REVISIONS

NO.	DATE	DESCRIPTION

SITE PLAN

DUNAWAY
118 Broadway • Suite 201 • San Antonio, Texas 78205
Tel: 210.267.5246
(TX REG. F-1114)

CITY OF SAN ANTONIO
PIPERS MEADOW PARK
SAN ANTONIO, TEXAS

PRELIMINARY
FOR REVIEW ONLY
These documents are for Design Review and not intended for Construction, Bidding or Permit Purposes. They were prepared by, or under the supervision of:
Bryan Kye Mask
L.A.# 2369

JOB NO.	3677.006
DESIGNED BY:	TL
DRAWN BY:	EO
CHECKED BY:	BKM
DATE:	March 7, 2019
SHEET:	L1.01

FULL PATH: G:\Production\0003\0003-3677\0006\PLAN\Drawings\Plan Sheets\Production\0003\0003-3677\0006\PLAN\Drawings\Plan Sheets\3677.006-Layout Plan
FILENAME: 3677.006-Layout Plan.dwg
PLOTTED BY: Edgar Ortega
PLOTTED ON: Thursday, March 7th, 2019
PLOTTED AT: 12:07:23 PM
PLOTTED WITH: AutoCAD-PDF (High Quality Print).pc3

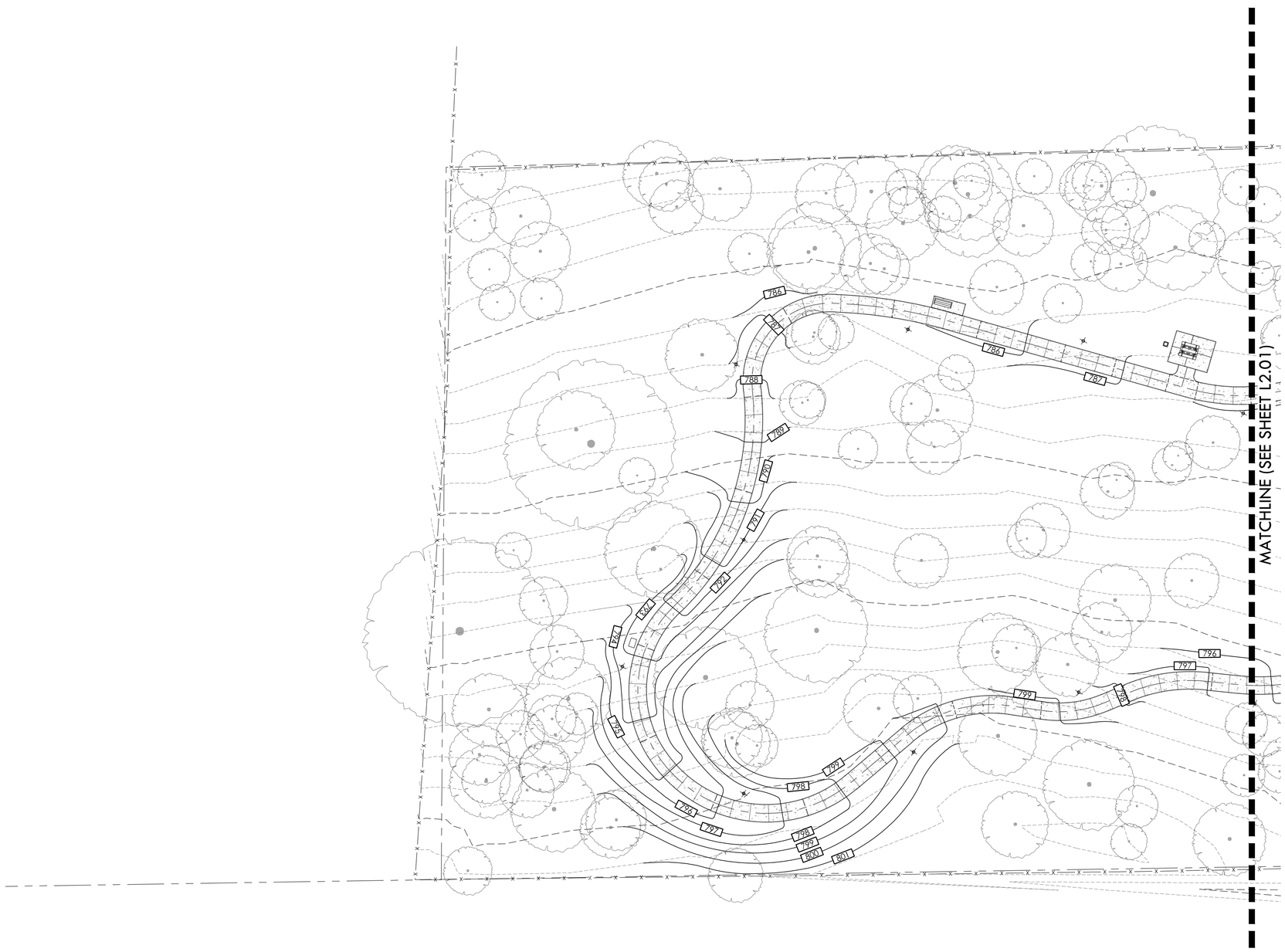

LEGEND

PROPERTY LINE	
DRIVE CENTER LINE	
FENCE LINE	x x x x x
OVERHEAD ELECTRIC	OHE
TRAIL CENTERLINE	
EXISTING CONCRETE CURB	
EXPANSION JOINT	
CONTROL JOINT	
EXISTING CONTOUR	794
PROPOSED CONTOUR	795
EXISTING TREE TO REMAIN	

NORTH

GRAPHIC SCALE
0 20 40
1 inch = 20'

95% REVIEW SET

REVISIONS		
NO.	DATE	DESCRIPTION

GRADING PLAN

CITY OF SAN ANTONIO
PIPERS MEADOW PARK
SAN ANTONIO, TEXAS

DUNAWAY
118 Broadway • Suite 201 • San Antonio, Texas 78205
Tel: 210.267.5246
(TX REG. F-1114)

PRELIMINARY
FOR REVIEW ONLY
These documents are for Design Review and not intended for Construction, Bidding or Permit Purposes. They were prepared by, or under the supervision of:
Bryan Kye Mask
L.A.# 2369

JOB NO.	3677.006
DESIGNED BY:	TL
DRAWN BY:	EO
CHECKED BY:	BKM
DATE:	March 7, 2019
SHEET:	L2.00

FULL PATH: C:\Production\000\00\3677\006\PLAN\Drawings\Plot Sheets\(Production)\000\00\3677\006\PLAN\Drawings\Plot Sheets\3677.006-Grading Plan
FILENAME: 3677.006-Grading Plan.dwg
PLOTTED BY: Edgar Ortega
PLOTTED ON: Thursday, February 28, 2019
PLOTTED AT: 11:55:53 AM
PLOTTED WITH: AutoCAD PDF (High Quality Print).pc3

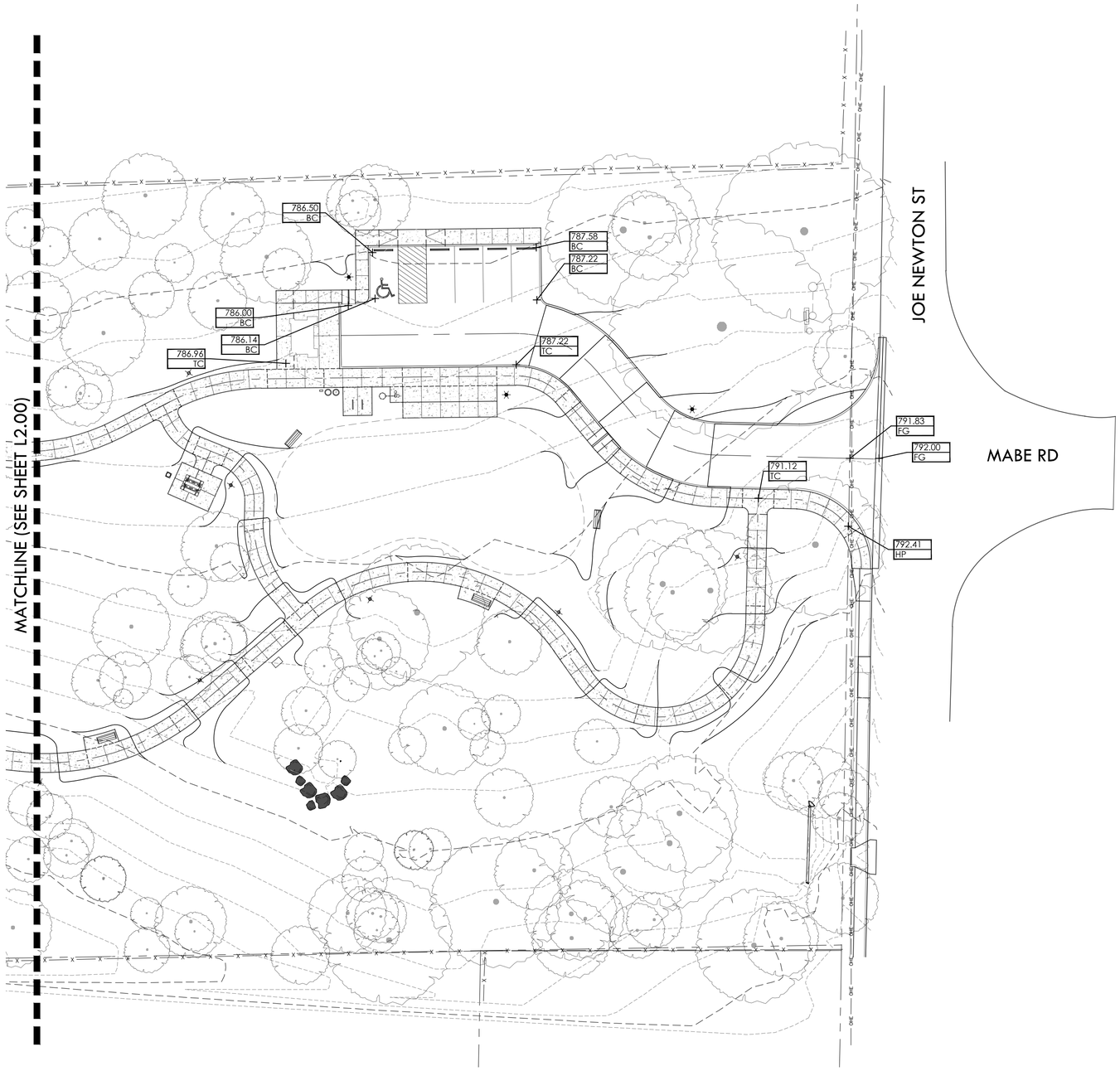

LEGEND

PROPERTY LINE	
DRIVE CENTER LINE	
FENCE LINE	x x x x x
OVERHEAD ELECTRIC	OHE
TRAIL CENTERLINE	
EXISTING CONCRETE CURB	
EXPANSION JOINT	
CONTROL JOINT	
EXISTING CONTOUR	794
PROPOSED CONTOUR	795
EXISTING TREE TO REMAIN	

NORTH

GRAPHIC SCALE
0 20 40
1 inch = 20'

95% REVIEW SET

REVISIONS

NO.	DATE	DESCRIPTION

GRADING PLAN

CITY OF SAN ANTONIO
PIPERS MEADOW PARK
SAN ANTONIO, TEXAS

DUNAWAY
118 Broadway • Suite 201 • San Antonio, Texas 78205
Tel: 210.267.5246
(TX REG. F-1114)

PRELIMINARY
FOR REVIEW ONLY
These documents are for Design Review and not intended for Construction, Bidding or Permit Purposes. They were prepared by, or under the supervision of:
Bryan Kye Mask
L.A.# 2369

JOB NO.	3677.006
DESIGNED BY:	TL
DRAWN BY:	EO
CHECKED BY:	BKM
DATE:	March 7, 2019
SHEET:	L2.01

FULL PATH: G:\Production\0500\0500\3677\3677.006\PLAN\Drawings\Plot Sheets\Production\0500\0500\3677\3677.006\PLAN\Drawings\Plot Sheets\3677.006 Grading Plan
FILENAME: 3677.006 Grading Plan.dwg
PLOTTED BY: Edgar Ortega
PLOTTED ON: Thursday, March 7th, 2019
PLOTTED AT: 11:35:56 AM
PLOTTED WITH: AutoCAD PDF (High Quality Print).pc3

SHEET INDEX:

NO. SHEET NAME

L3.00 DETAIL INDEX

L3.01 PAVING DETAILS
- A. 4" CONCRETE PAVING
- B. EXPANSION JOINT
- C. CONC. PAVING @ EXISTING CONC.
- D. STANDARD CURB @ CONC. WALK
- E. ACCESSIBLE RAMP
- F. SIDEWALK BOX
- G. PLAYGROUND SURFACE @ WALK
- H. PLAYGROUND SURFACE

L3.02 PARKING DETAILS
- A. HANDICAP PARKING SIGN
- B. WHEEL STOP
- C. HANDICAP SYMBOL
- D. PARKING LOT STRIPING

L3.03 SITE DETAILS
- A. DRINKING FOUNTAIN
- B. SUMP
- C. BENCH
- D. PICNIC UNIT
- E. PICNIC TABLE
- F. BIKE RACK
- G. TRASH/RECYCLING RECEPTACLES
- H. PET WASTE STATION

L3.04 SIGNAGE DETAILS
- A. INTERPRETIVE SIGN CARRIER
- B. SIGN ATTACHMENT

L3.05 LIGHTING DETAILS
- A. PEDESTRIAN LIGHT DETAIL
- B. LIGHT FIXTURE FOOTING

L3.06 RESTROOM DETAILS
- A. RESTROOM ENCLOSURE
- B. RESTROOM ENCLOSURE (FRONT)
- C. RESTROOM ENCLOSURE (FRONT)
- D. RESTROOM ENCLOSURE (SIDE)
- E. RESTROOM ENCLOSURE (SIDE)
- F. RESTROOM ENCLOSURE (REAR)
- G. RESTROOM ENCLOSURE FOUNDATION
- H. FOUNDATION @ STEEL COLUMN
- I. FOUNDATION @ STONE COLUMN

L3.07 RESTROOM DETAILS
- A. FOUNDATION PERIMETER
- B. END STONE COLUMN
- C. LOCKING PIN

95% REVIEW SET

REVISIONS

NO.	DATE	DESCRIPTION

DETAILS INDEX

DUNAWAY
118 Broadway • Suite 201 • San Antonio, Texas 78205
Tel: 210.267.5246
(TX REG. F-1114)

CITY OF SAN ANTONIO
PIPERS MEADOW PARK
SAN ANTONIO, TEXAS

PRELIMINARY
FOR REVIEW ONLY
These documents are for Design Review and not intended for Construction, Bidding or Permit Purposes. They were prepared by, or under the supervision of:
Bryan Kye Mask
L.A.# 2369

JOB NO.	3677.006
DESIGNED BY:	TL
DRAWN BY:	MM
CHECKED BY:	JM
DATE:	March 7, 2019
SHEET:	L3.00

FULL PATH: G:\Production\5000\3000\3677\5000\PLAD\Drawing\Plot Sheets\L3677.006-Site Details

FILENAME: 3677.006-Site Details.dwg
PLOTTED BY: Tara Ludwig
PLOTTED ON: Thursday, February 28, 2019
PLOTTED AT: 3:51:27 PM
PLOTTED WITH: _DWG TO PDF.pc3

NOTES:
1. PROVIDE 2% (1/4" PER FOOT) CROSS SLOPE FOR POSITIVE DRAINAGE UNLESS OTHERWISE INDICATED.
2. PROVIDE 3000 PSI CONCRETE AT 28 DAYS.
3. SCORE JOINTS @ 6-0" O.C. (MAX - UNLESS OTHERWISE INDICATED)
4. EXPANSION JOINTS @ 30'-0" O.C. (MAX)
5. CONCRETE TO BE LIGHT BROOM FINISH

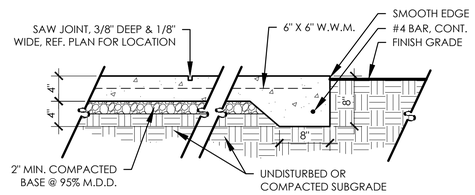

A 4" CONCRETE PAVING

SCALE: 1"=1'-0"

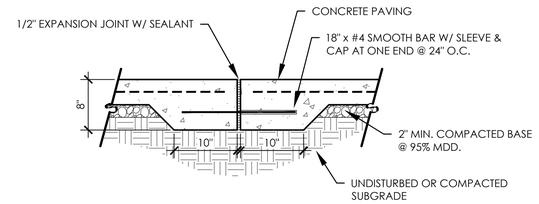

B EXPANSION JOINT

SCALE: 1"=1'-0"

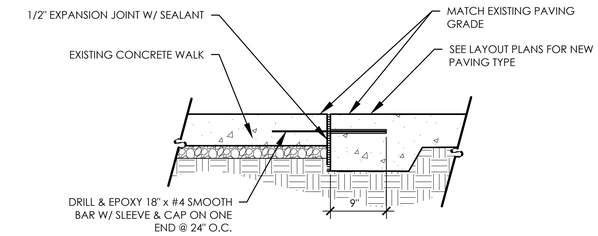

C CONC. PAVING @ EXISTING CONC.

SCALE: 1"=1'-0"

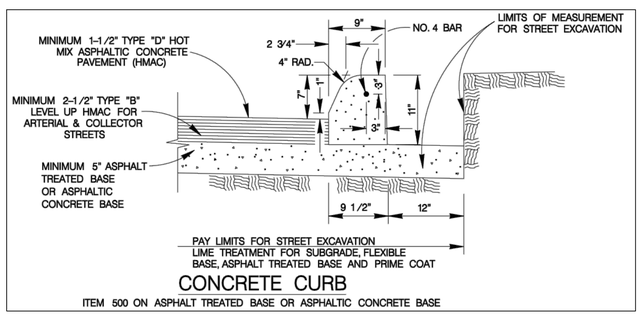

NOTE: CITY OF SAN ANTONIO STANDARD DETAIL FROM CITY OF SAN ANTONIO CONSTRUCTION STANDARDS SHEET 1.

D STANDARD CURB @ ASPHALT PAVING

SCALE: 1"=1'-0"

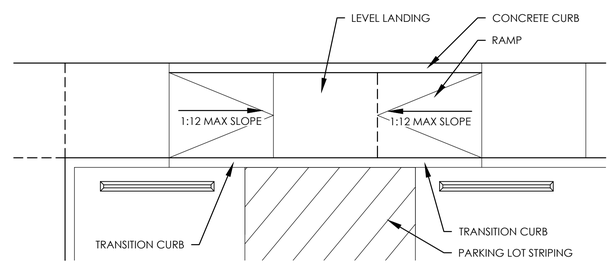

E ACCESSIBLE RAMP

SCALE: 1/4"=1'-0"

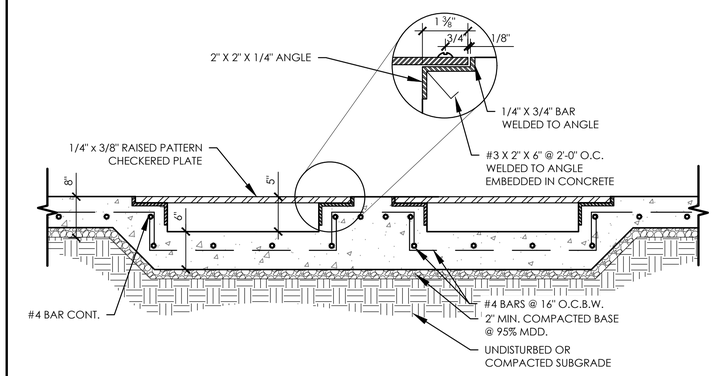

F SIDEWALK BOX

SCALE: 1"=1'-0"

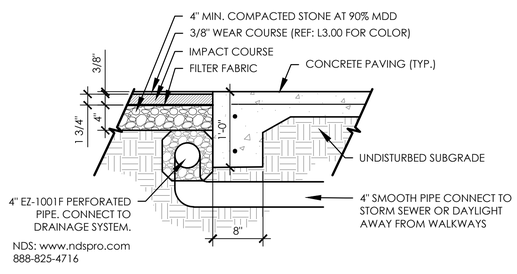

G PLAYGROUND SURFACE @ WALK

SCALE: 1"=1'-0"

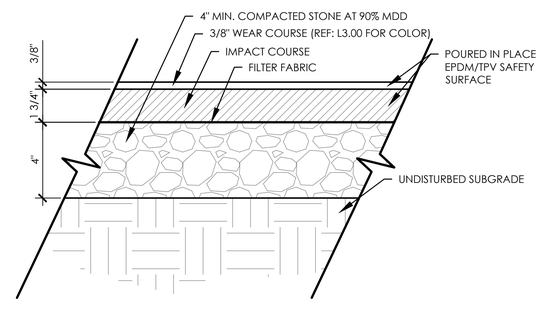

H PLAYGROUND SURFACE

SCALE: 3"=1'-0"

I

95% REVIEW SET

REVISIONS

NO.	DATE	DESCRIPTION

PAVING DETAILS

CITY OF SAN ANTONIO
PIPERS MEADOW PARK
SAN ANTONIO, TEXAS

DUNAWAY
118 Broadway • Suite 201 • San Antonio, Texas 78205
Tel: 210.267.5246
(TX REG. F-1114)

PRELIMINARY
FOR REVIEW ONLY
These documents are for Design Review and not intended for Construction, Bidding or Permit Purposes. They were prepared by, or under the supervision of:
Bryan Kye Mask
L.A.# 2369

JOB NO.	3677.006
DESIGNED BY:	TL
DRAWN BY:	MM
CHECKED BY:	JM
DATE:	March 7, 2019
SHEET:	L3.01

FILE PATH: G:\Production\0001\0000\3677\3600\PLA\Drawings\Plot Sheets_Production\001\000\3677\3600\PLA\Drawings\Plot Sheets\3677.006 Site Details
FILENAME: 3677.006 Site Details.dwg
PLOTTED BY: Trent Lindberg
PLOTTED ON: Thursday, February 28, 2019
PLOTTED AT: 3:53:28 PM
PLOTTED WITH: _DWG To PDF.pc3

NOTE:
REFERENCE LAYOUT PLAN
FOR SIGN LOCATION

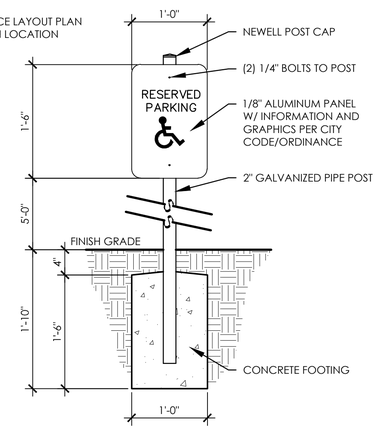

A HANDICAP PARKING SIGN

SCALE: 1"=1'-0"

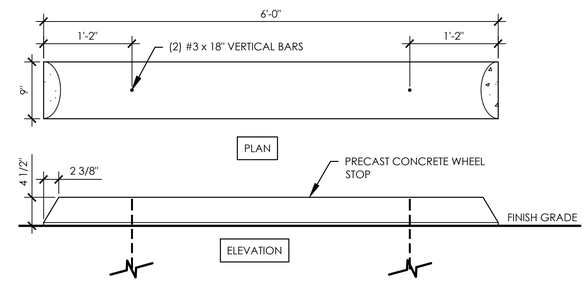

B WHEEL STOP

SCALE: 1"=1'-0"

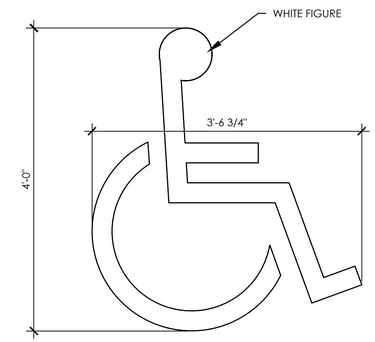

NOTE: SEE CALIFORNIA ACCESSIBILITY STANDARDS, TITLE 24 C.A.C., FOR ADDITIONAL REQUIREMENTS.

C HANDICAP SYMBOL

N.T.S.

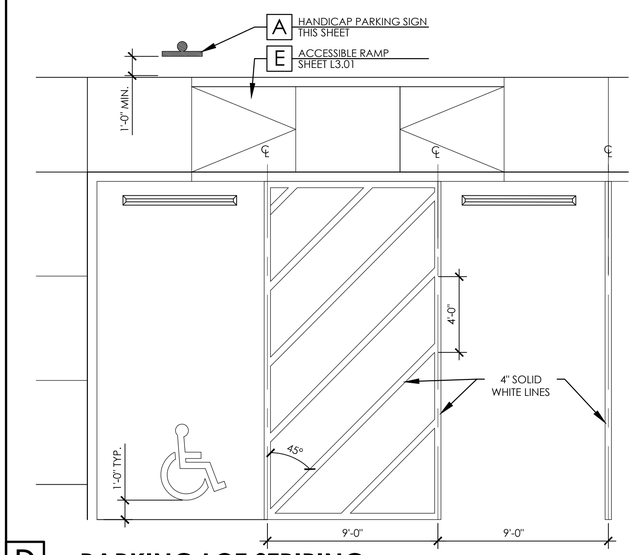

NOTES:

1. ALL PARKING SPACE LIMIT LINES SHALL BE 4" SOLID WHITE LINES.
2. AISLE MARKINGS SHOWN ARE EXAMPLES ONLY. OTHER METHODS TO INDICATE A NO PARKING AREA ARE ACCEPTABLE. AISLE MARKINGS SHALL BE WHITE.
3. DIMENSIONS OF LIMIT LINES, AISLE MARKINGS, AND SYMBOL (WITH OR WITHOUT BACKGROUND) MAY VARY + 10%.
4. PAVEMENT MARKING SYMBOLS (WITH BACKGROUND):
   A. ARE REQUIRED UNLESS STATED ELSEWHERE IN THE PLANS,
   B. SHOULD BE PLACED TOWARD THE FAR END OF THE PARKING SPACES SO AS TO BE VISIBLE TO MOTORISTS IN THE TRAVEL LANE,
   C. MAY BE PAINTED OR PREFABRICATED MATERIAL, AND
   D. SHALL BE 30"x30" MINIMUM.
5. ALL SLOPE IN AND AROUND EXPECTED WHEEL CHAIR PATH SHALL NOT EXCEED 2% CROSS-SLOPES.

D PARKING LOT STRIPING

SCALE: 1/4"=1'-0"

95% REVIEW SET

REVISIONS		
NO.	DATE	DESCRIPTION

PARKING DETAILS

CITY OF SAN ANTONIO
PIPERS MEADOW PARK
SAN ANTONIO, TEXAS

DUNAWAY
118 Broadway • Suite 201 • San Antonio, Texas 78205
Tel: 210.267.5246
(TX REG. F-1114)

PRELIMINARY
FOR REVIEW ONLY
These documents are for Design Review and not intended for Construction, Bidding or Permit Purposes. They were prepared by, or under the supervision of:
Bryan Kye Mask
L.A.# 2369

JOB NO.	3677.006
DESIGNED BY:	TL
DRAWN BY:	MM
CHECKED BY:	JM
DATE:	March 7, 2019
SHEET:	L3.02

FULL PATH: C:\Production\500\00\3600\3677\006\PLAN\Drawings\Plot Sheets\3677.006 Site Details
FILENAME: 3677.006 Site Details.dwg
PLOTTED BY: Tara Ludwig
LAST SAVED: Thursday, February 28, 2019
PLOTTED ON: Thursday, February 28, 2019
PLOTTED AT: 3:51:30 PM
PLOTTED WITH: _DWG To PDF.pc3

MODEL 440 SM

SHOWN W/ OPTIONAL PF AND 1010 SS SURFACE CARRIER

NOTES:
1. MEETS ADA REGULATIONS.
2. DO NOT SCALE DRAWINGS.
3. INSTALL ACCORDING TO MANUFACTURER'S SPECIFICATIONS.
4. COLOR - BROWN.

MOST DEPENDABLE FOUNTAINS
5705 COMMANDER DR.
P.O. BOX 587
ARLINGTON, TN 38002-0587
1-800-552-6331
PHONE: (901) 867-0039
FAX: (901) 867-0159
www.mostdependable.com

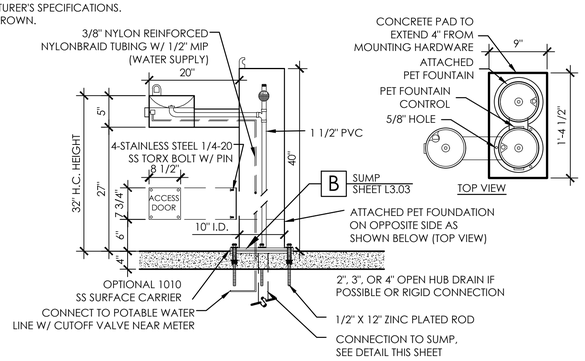

A DRINKING FOUNTAIN

N.T.S.

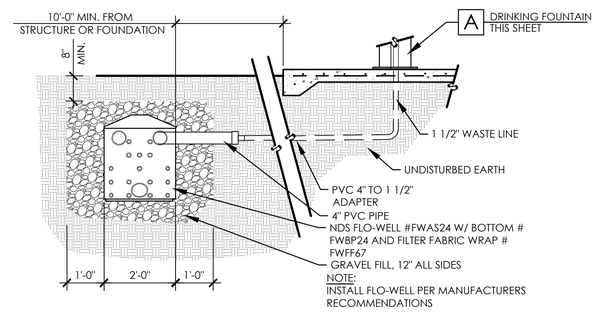

NOTE:
INSTALL FLO-WELL PER MANUFACTURERS RECOMMENDATIONS

B SUMP

SCALE: 1/2"=1'-0"

MLB970-W

BACKED BENCH, WOOD, FREESTANDING/SURFACE MOUNT

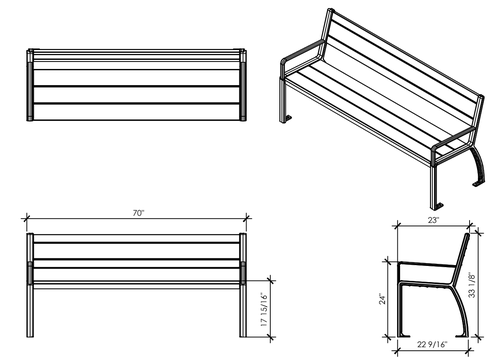

MAGLIN
6-27 BYSHAM PARK DRIVE
WOODSTOCK, ON N4T 1P1
TEL: (800) 716-5506
FAX (877) 260-9393
WEB SITE: WWW.MAGLIN.COM

THE INFORMATION CONTAINED IN THIS DRAWING IS THE SOLE PROPERTY OF MAGLIN SITE FURNITURE INC. ANY REPRODUCTION IN PART OR AS A WHOLE WITHOUT THE WRITTEN PERMISSION OF MAGLIN SITE FURNITURE INC. IS PROHIBITED.

NOTES:
1. DRAWINGS NOT TO SCALE. DO NOT SCALE DRAWINGS.

C BENCH

SCALE: N.T.S.

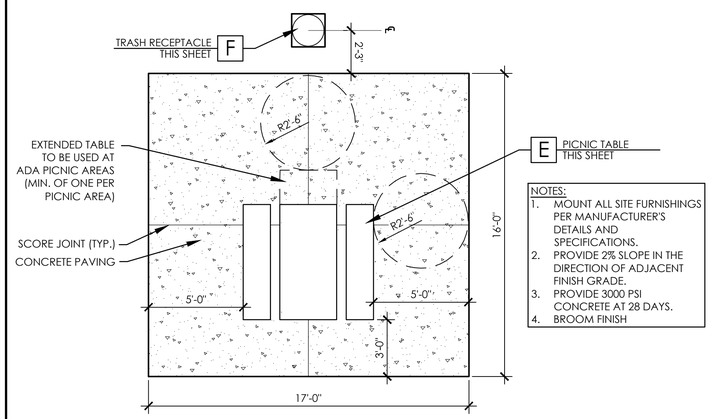

NOTES:
1. MOUNT ALL SITE FURNISHINGS PER MANUFACTURER'S DETAILS AND SPECIFICATIONS.
2. PROVIDE 2% SLOPE IN THE DIRECTION OF ADJACENT FINISH GRADE.
3. PROVIDE 3000 PSI CONCRETE AT 28 DAYS.
4. BROOM FINISH

D PICNIC UNIT

SCALE: 1/4"=1'-0"

MLP210 SERIES- MLPT210-S-R(X)

CLUSTER SEATING, 210, SURFACE MOUNT,
RECYCLED PLASTIC - WOOD GRAIN
STEEL COMPONENTS COATED WITH E-COAT RUST PROOFING

MAGLIN SITE FURNITURE INC.
TEL: (800) 716-5506
FAX (877) 260-9393

WEB SITE: WWW.MAGLIN.COM

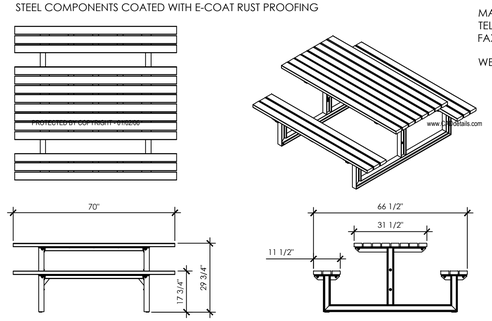

MAGLIN
THE INFORMATION CONTAINED IN THIS DRAWING IS THE SOLE PROPERTY OF MAGLIN SITE FURNITURE INC. ANY REPRODUCTION IN PART OR AS A WHOLE WITHOUT THE WRITTEN PERMISSION OF MAGLIN SITE FURNITURE INC. IS PROHIBITED.

NOTES:
1. DRAWINGS NOT TO SCALE. DO NOT SCALE DRAWINGS.

E PICNIC TABLE

SCALE: N.T.S.

MODEL MBR500-S

BIKE RACK, STEEL

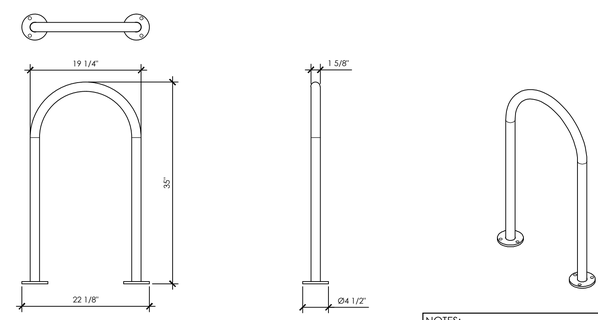

MAGLIN
THE INFORMATION CONTAINED IN THIS DRAWING IS THE SOLE PROPERTY OF MAGLIN SITE FURNITURE INC. ANY REPRODUCTION IN PART OR AS A WHOLE WITHOUT THE WRITTEN PERMISSION OF MAGLIN SITE FURNITURE INC. IS PROHIBITED.

NOTES:
1. DRAWINGS NOT TO SCALE. DO NOT SCALE DRAWINGS.

MAGLIN SITE FURNITURE INC.
TEL: (800) 716-5506
FAX (877) 260-9393
WEB SITE: WWW.MAGLIN.COM

F BIKE RACK

SCALE: N.T.S.

MODEL MLWR200-32-ST

TRASH RECEPTACLE

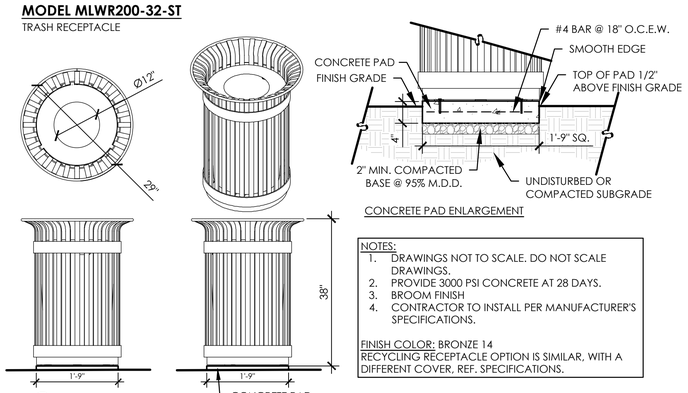

CONCRETE PAD ENLARGEMENT

NOTES:
1. DRAWINGS NOT TO SCALE. DO NOT SCALE DRAWINGS.
2. PROVIDE 3000 PSI CONCRETE AT 28 DAYS.
3. BROOM FINISH
4. CONTRACTOR TO INSTALL PER MANUFACTURER'S SPECIFICATIONS.

FINISH COLOR: BRONZE 14
RECYCLING RECEPTACLE OPTION IS SIMILAR, WITH A DIFFERENT COVER, REF. SPECIFICATIONS.

MAGLIN
THE INFORMATION CONTAINED IN THIS DRAWING IS THE SOLE PROPERTY OF MAGLIN SITE FURNITURE INC. ANY REPRODUCTION IN PART OR AS A WHOLE WITHOUT THE WRITTEN PERMISSION OF MAGLIN SITE FURNITURE INC. IS PROHIBITED.

MAGLIN SITE FURNITURE INC.
TEL: (800) 716-5506
FAX (877) 260-9393
WEB SITE: WWW.MAGLIN.COM

G TRASH/RECYCLING RECEPTACLES

SCALE: N.T.S.

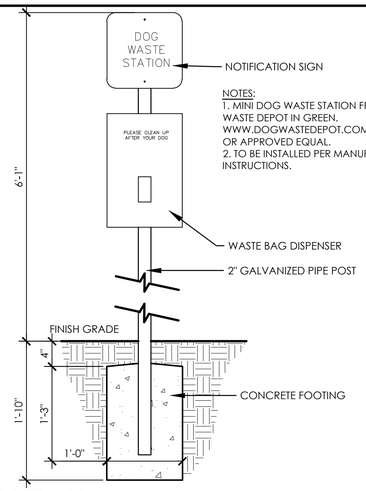

NOTES:
1. MINI DOG WASTE STATION FROM DOG WASTE DEPOT IN GREEN. WWW.DOGWASTEDEPOT.COM OR APPROVED EQUAL.
2. TO BE INSTALLED PER MANUFACTURER'S INSTRUCTIONS.

H PET WASTE STATION

SCALE: 1"=1'-0"

95% REVIEW SET

REVISIONS		
NO.	DATE	DESCRIPTION

SITE DETAILS

CITY OF SAN ANTONIO
PIPERS MEADOW PARK
SAN ANTONIO, TEXAS

DUNAWAY
118 Broadway • Suite 201 • San Antonio, Texas 78205
Tel: 210.267.5246
(TX REG. F-1114)

PRELIMINARY
FOR REVIEW ONLY
These documents are for Design Review and not intended for Construction, Bidding or Permit Purposes. They were prepared by, or under the supervision of:
Bryan Kye Mask
L.A.# 2369

JOB NO.	3677.006
DESIGNED BY:	TL
DRAWN BY:	MM
CHECKED BY:	JM
DATE:	March 7, 2019
SHEET:	L3.03

FILE PATH: C:\Production\500\00\500\3677\500\PLAN\Drawings\Plot Sheets\;\Production\500\500\3677\500\PLAN\Drawings\Plot Sheets\3677.006 Site Details
FILENAME: 3677.006 Site Details.dwg
PLOTTED BY: Tara Ludwig
LAST SAVED: Thursday, January 26, 2019
PLOTTED ON: 3-5-19
PLOTTED AT: 3:51:39 PM
PLOTTED WITH: _DWG To PDF.pc3

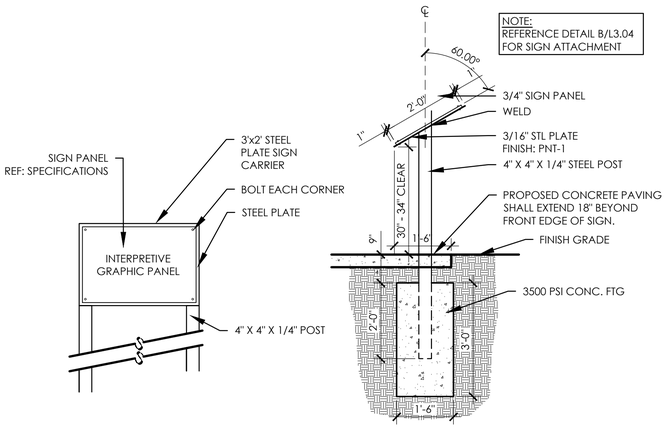

A **INTERPRETIVE SIGN CARRIER** SCALE: 1/2" = 1'-0"

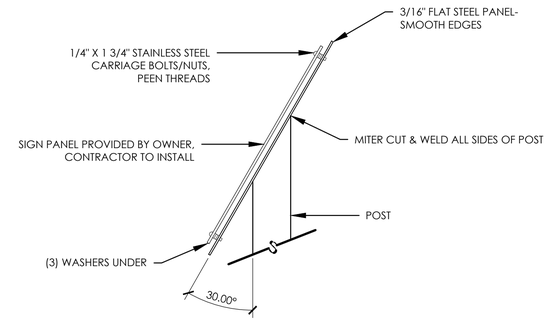

B **SIGN ATTACHMENT** SCALE: 1-1/2" = 1'-0"

95% REVIEW SET

REVISIONS

NO.	DATE	DESCRIPTION

SIGNAGE DETAILS

CITY OF SAN ANTONIO
PIPERS MEADOW PARK
SAN ANTONIO, TEXAS

DUNAWAY
118 Broadway • Suite 201 • San Antonio, Texas 78205
Tel: 210.267.5246
(TX REG. F-1114)

PRELIMINARY
FOR REVIEW ONLY
These documents are for Design Review and not intended for Construction, Bidding or Permit Purposes. They were prepared by, or under the supervision of:
Bryan Kye Mask
L.A.# 2369

JOB NO.	3677.006
DESIGNED BY:	TL
DRAWN BY:	MM
CHECKED BY:	JM
DATE:	March 7, 2019
SHEET:	L3.04

FULL PATH: G:\Production\5000\3000\3677\3006\PLA\Drawings\Plot Sheets\
FILENAME: 3677.006-Site Details.dwg
PLOTTED BY: Tara Ludwig
PLOTTED ON: Thursday, February 28, 2019
PLOTTED AT: 3:51:40 PM
PLOTTED WITH: _DWG TO PDF.pc3

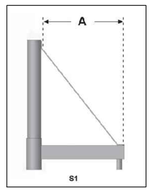

VISIONAIRE LIGHTING ARM TYPE VA107 - BZ (BRONZE)

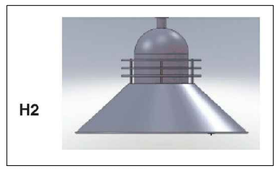

VISIONAIRE LIGHTING PAVILIJON II FIXTURE
CAP 1 (C1) HOUSING 2 (H2) - BZ (BRONZE)

RNTS

VISIONAIRE LIGHTING POLE TYPE RNTS - 12' HEIGHT
- BZ (BRONZE)

DCB-20

VISIONAIRE LIGHTING POLE BASE TYPE DCB-20
- BZ (BRONZE)

A PEDESTRIAN LIGHT DETAIL

SCALE: 3/4"=1'-0"

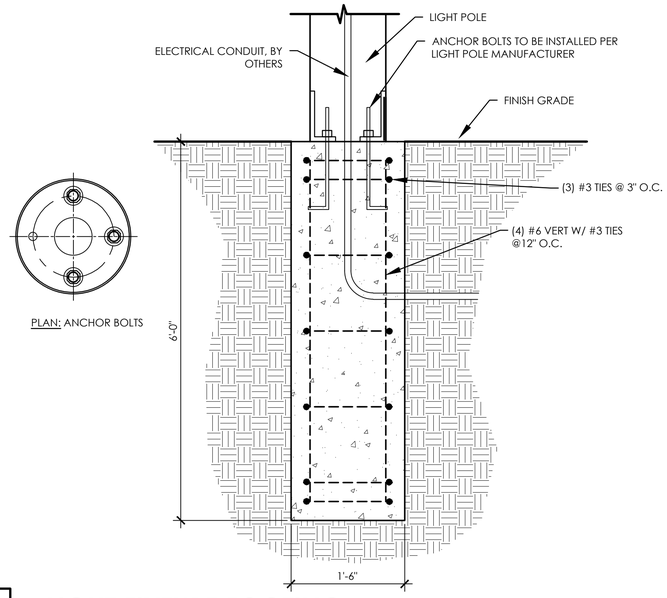

B LIGHT FIXTURE FOOTING

SCALE: 1"=1'-0"

PIPERS MEADOW PARK LIGHTING SCHEDULE

SYMBOL	QTY	MANUFACTURER	SPECIFICATION	DESCRIPTION	INSTALLATION	CONTROLS
A	19	Visionaire Lighting LLC	PD-L-T5-42LC-5-4K-UNV	PAVILION II 60W LED lighting - install with VA107 Arm in bronze.	Install per manufacturer's instructions.	Install with Photoelectric cell. See MEP drawings for further information.
		Visionaire Lighting LLC		Visionaire Lighting Pole Type RNTS in bronze, 12' tall.	Install per manufacturer's instructions.	

NOTE: CONTACT DENNIS GOLSCH AT SPECTRUM LIGHTING FOR ORDERING INFORMATION. CELL: 210-784-7670/TEL: 210-822-6140 EXT: 133/EMAIL: DGOLSCH@SPECTRUMUSA.COM

95% REVIEW SET

REVISIONS

NO.	DATE	DESCRIPTION

LIGHTING DETAILS

DUNAWAY
118 Broadway • Suite 201 • San Antonio, Texas 78205
Tel: 210.267.5246
(TX REG. F-1114)

CITY OF SAN ANTONIO
PIPERS MEADOW PARK
SAN ANTONIO, TEXAS

PRELIMINARY
FOR REVIEW ONLY
These documents are for Design Review and not intended for Construction, Bidding or Permit Purposes. They were prepared by, or under the supervision of:
Bryan Kye Mask
L.A.# 2369

JOB NO.	3677.006
DESIGNED BY:	TL
DRAWN BY:	MM
CHECKED BY:	JM
DATE:	March 7, 2019
SHEET:	L3.05

FULL PATH: G:\Production\0010\0060\3677\0010\PLAD\Drawings\Plot Sheets\
FILENAME: 3677.006-Site Details.dwg
PLOTTED BY: Tara Ludwig
PLOTTED ON: Thursday, February 28, 2019
PLOTTED AT: 3:51:45 PM
PLOTTED WITH: _JANE-TO-PDF.pc3

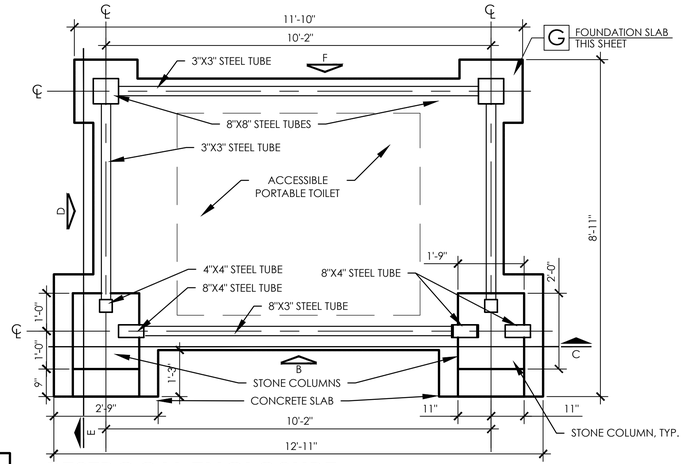

A **RESTROOM ENCLOSURE** SCALE: 1/2"=1'-0"

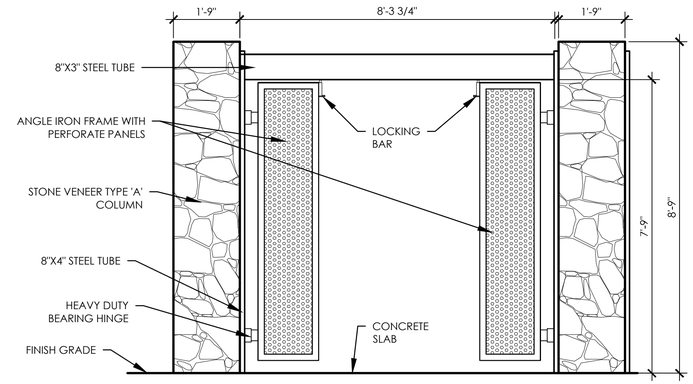

B **RESTROOM ENCLOSURE (FRONT)** SCALE: 1/2"=1'-0"

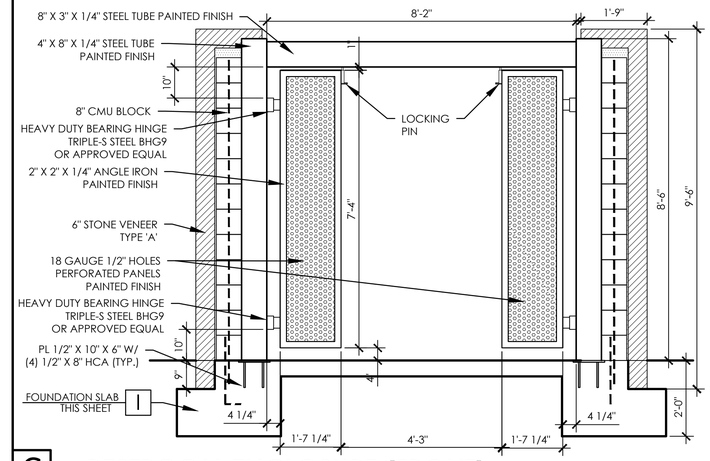

C **RESTROOM ENCLOSURE (FRONT)** SCALE: 1/2"=1'-0"

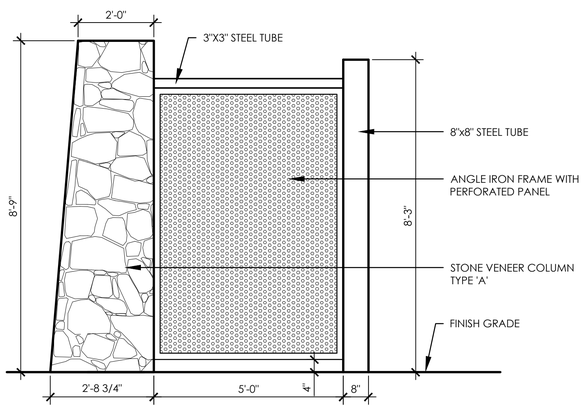

D **RESTROOM ENCLOSURE (SIDE)** SCALE: 1/2"=1'-0"

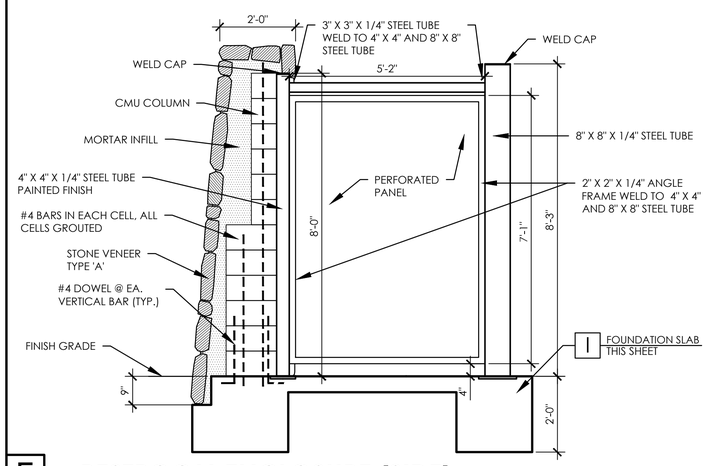

E **RESTROOM ENCLOSURE (SIDE)** SCALE: 1/2"=1'-0"

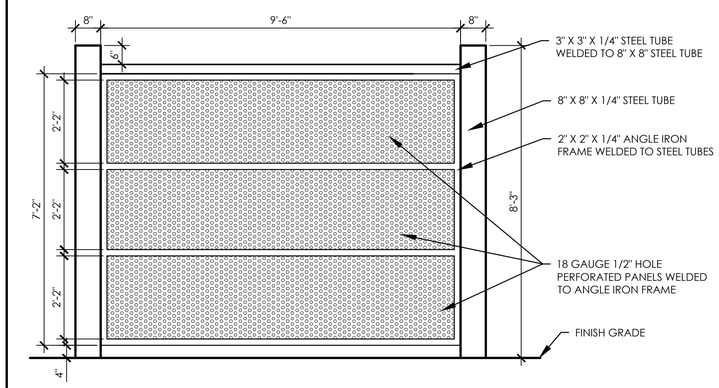

F **RESTROOM ENCLOSURE (REAR)** SCALE: 1/2"=1'-0:"

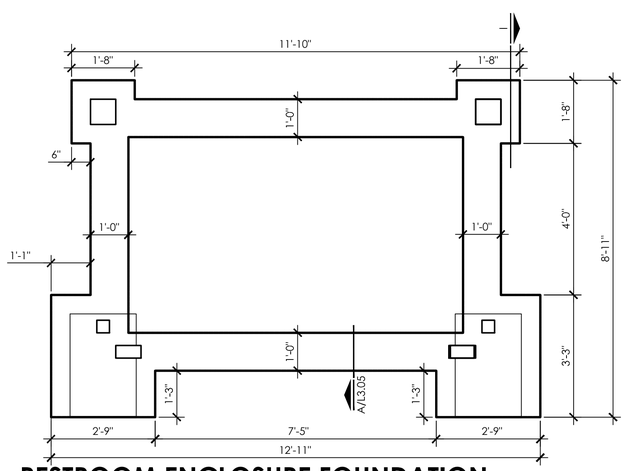

G **RESTROOM ENCLOSURE FOUNDATION** SCALE: 1/2"=1'-0"

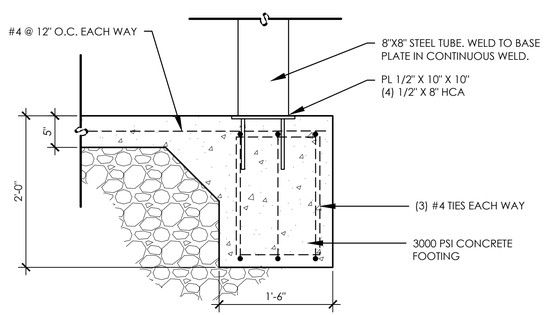

H **FOUNDATION @ STEEL COLUMN** SCALE: 1"=1'-0"

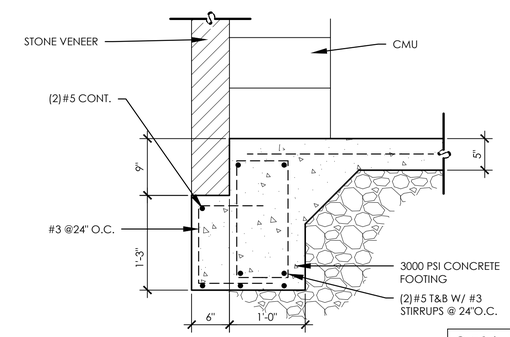

95% REVIEW SET

I **FOUNDATION @ STONE COLUMN** SCALE: 1"=1'-0"

REVISIONS		
NO.	DATE	DESCRIPTION

RESTROOM DETAILS

CITY OF SAN ANTONIO
PIPERS MEADOW PARK
SAN ANTONIO, TEXAS

DUNAWAY
118 Broadway • Suite 201 • San Antonio, Texas 78205
Tel: 210.267.5246
(TX REG. F-1114)

PRELIMINARY
FOR REVIEW ONLY
These documents are for Design Review and not intended for Construction, Bidding or Permit Purposes. They were prepared by, or under the supervision of:
Bryan Kye Mask
L.A.# 2369

JOB NO.	3677.006
DESIGNED BY:	TL
DRAWN BY:	MM
CHECKED BY:	JM
DATE:	March 7, 2019
SHEET:	L3.06

FULL PATH: G:\Production\00\00\00\36770\00\PLAN\Drawings\Plot Sheets\C-Production\00\00\00\36770\00\PLAN\Drawings\Plot Sheets\3677.006-Site Details

FILENAME: 3677.006-Site Details.dwg
PLOTTED BY: Tyler Lindberg
PLOTTED ON: Thursday, February 28, 2019
PLOTTED AT: 3:55:57 PM
PLOTTED WITH: _DWG To PDF.pc3

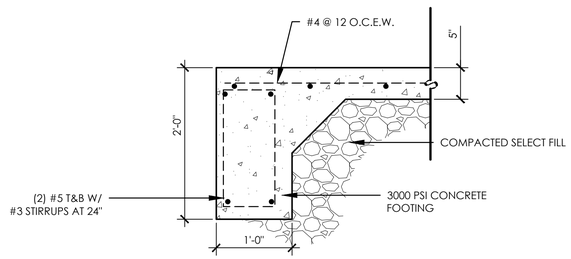

A **FOUNDATION PERIMETER** SCALE: 3/4"=1'-0"

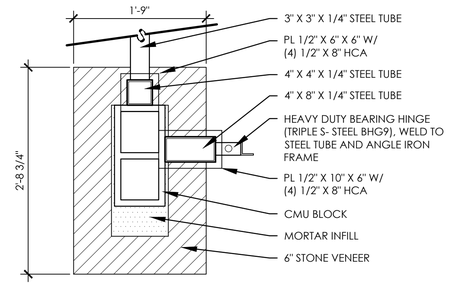

B **END STONE COLUMN** SCALE: 1"=1'-0"

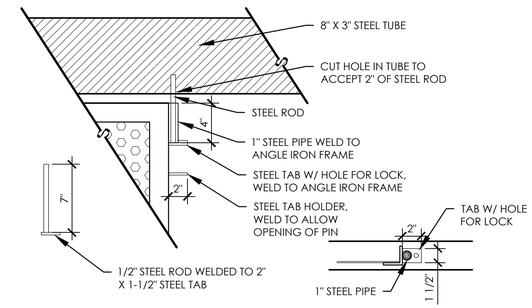

C **LOCKING PIN** SCALE: 1-1/2"=1'-0"

95% REVIEW SET

REVISIONS		
NO.	DATE	DESCRIPTION

RESTROOM DETAILS

CITY OF SAN ANTONIO
PIPERS MEADOW PARK
SAN ANTONIO, TEXAS

DUNAWAY
118 Broadway • Suite 201 • San Antonio, Texas 78205
Tel: 210.267.5246
(TX REG. F-1114)

PRELIMINARY
FOR REVIEW ONLY
These documents are for Design Review and not intended for Construction, Bidding or Permit Purposes. They were prepared by, or under the supervision of:
Bryan Kye Mask
L.A.# 2369

JOB NO.	3677.006
DESIGNED BY:	TL
DRAWN BY:	MM
CHECKED BY:	JM
DATE:	March 7, 2019
SHEET:	L3.07

FULL PATH: G:\Production\0500\0600\3677\0600\PLA\Drawings\Plot Sheets\ (Production\0500\0600\3677\0600\PLA\Drawings\Plot Sheets\3677.006-Site Details
FILENAME: 3677.006-Site Details.dwg
PLOTTED BY: Tae Ludwig
PLOTTED ON: Thursday, January 24, 2019
PLOTTED AT: 3:51:55 PM
PLOTTED WITH: _SAND To PDF.pc3

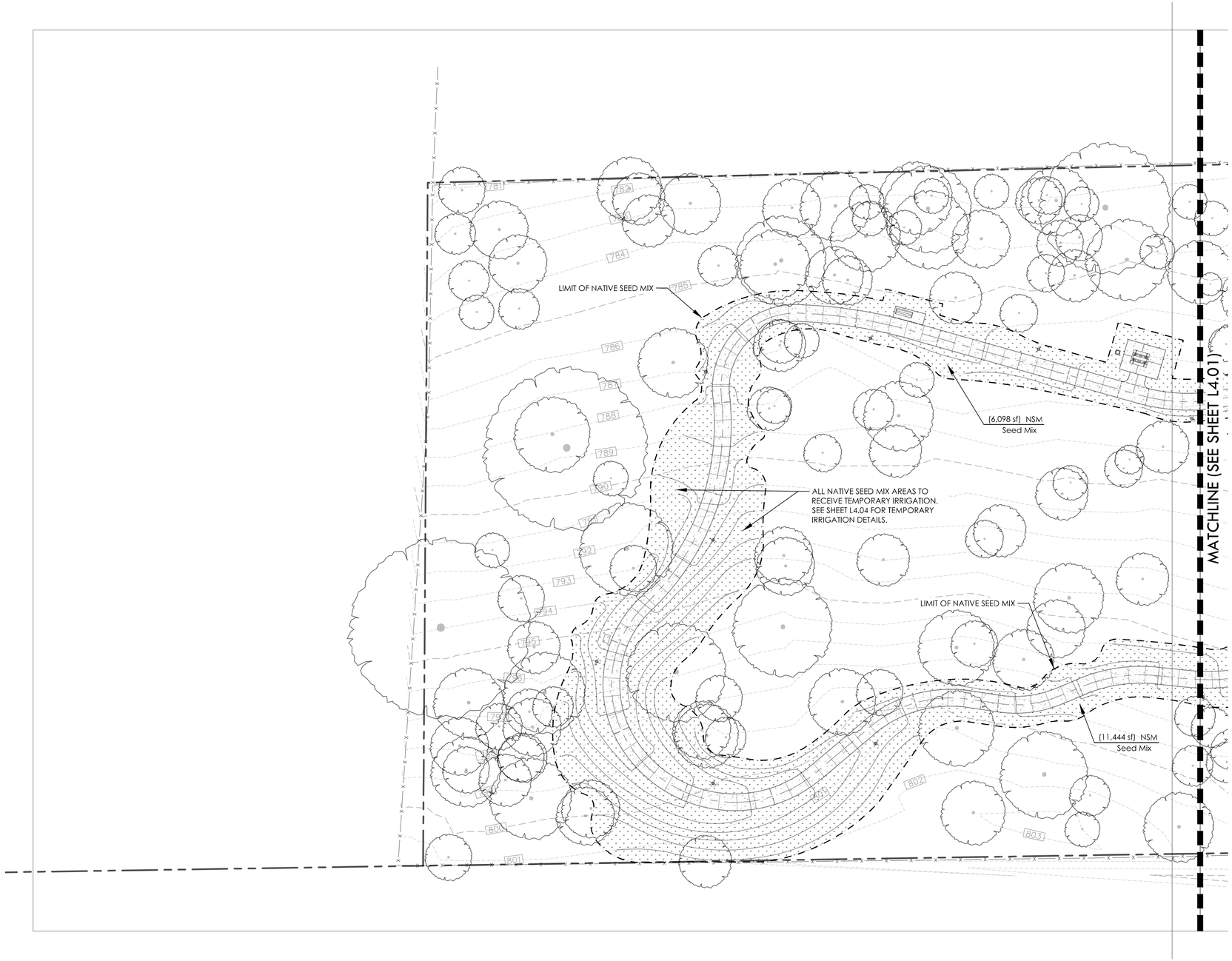

LEGEND

PROPERTY LINE

LIMIT OF NATIVE SEED MIX

EXISTING TREE TO REMAIN

NATIVE SEED MIX

SEE SHEET L4.02 FOR PLANTING SCHEDULE, NATIVE SEED MIX, AND DETAILS.

SEE SHEET L4.03 FOR TEMPORARY IRRIGATION DETAILS.

LANDSCAPE CONSTRUCTION LEGEND			
KEY	DESCRIPTION	DETAIL NO:	DETAIL SHEET:
1	LANDSCAPE BOULDER	B	L4.02

NOTES

1. ALL PLANT MATERIAL LOCATIONS SHALL BE STAKED IN FIELD BY CONTRACTOR AND APPROVED BY THE LANDSCAPE ARCHITECT OR OWNER PRIOR TO INSTALLATION.
2. THE CONTRACTOR SHALL PROVIDE POSITIVE DRAINAGE AWAY FROM ALL SITE FEATURES.
3. ALL DISTURBED AREAS WITHIN THE LIMITS OF CONSTRUCTION SHALL BE HYDROMULCHED WITH A NATIVE SEED MIX USING HYDRAULICALLY-APPLIED HIGH PERFORMANCE FLEXIBLE GROWTH MEDIUM, AS DESCRIBED IN THE SPECIFICATIONS.
4. SEE SPECIFICATIONS FOR SEED MIX PLANTING DATES. THESE DATES CANNOT CHANGE.
5. GRASSING QUANTITIES ARE APPROXIMATE AND CONTRACTOR IS RESPONSIBLE FOR ALL AREAS DESIGNATED ON PLANS.
6. FINE GRADING SHALL BE PERFORMED IN ALL AREAS TO BE SEEDED. FINE GRADING SHALL INCLUDE THE REMOVAL OF DEBRIS, ROCKS, ETC. FROM THE SITE.
7. THE CONTRACTOR SHALL VERIFY LOCATIONS OF AND PROTECT ALL UTILITIES IN THE FIELD PRIOR TO COMMENCEMENT OF WORK.

NORTH

GRAPHIC SCALE
0 20 40
1 inch = 20'

95% REVIEW SET

REVISIONS

NO.	DATE	DESCRIPTION

DUNAWAY
118 Broadway • Suite 201 • San Antonio, Texas 78205
tel: 210.267.5246
(TX REG. F-1114)

PLANTING PLAN

CITY OF SAN ANTONIO
PIPERS MEADOW PARK
SAN ANTONIO, TEXAS

PRELIMINARY
FOR REVIEW ONLY
These documents are for Design Review and not intended for Construction, Bidding or Permit Purposes. They were prepared by, or under the supervision of:
Bryan Kye Mask
L.A.# 2369

JOB NO.	3677.006
DESIGNED BY:	TL
DRAWN BY:	EO
CHECKED BY:	JM
DATE:	March 7, 2019
SHEET:	L4.00

FILE PATH: C:\Production\500\00500\3677\3677.006\PLAN\Drawings\Plot Sheets\Plot Sheets\3677.006-Pantry Plan
FILENAME: 3677.006-Pantry Plan.dwg
PLOTTED BY: Edgar Ortega
PLOTTED ON: Thursday, February 28, 2019
PLOTTED AT: 12:24:27 PM
PLOTTED WITH: AutoCAD PDF (High Quality Print).pc3

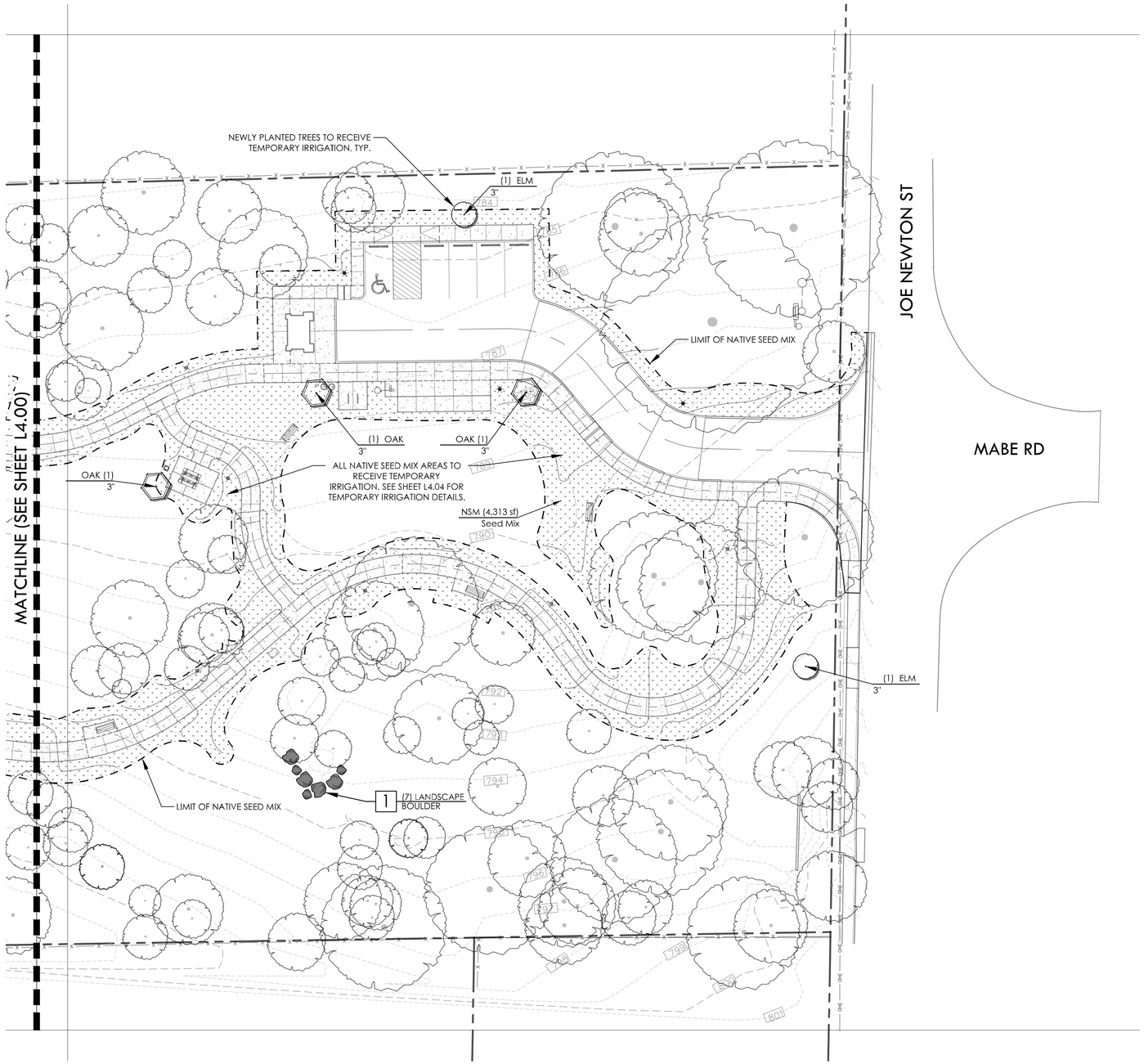

LEGEND

PROPERTY LINE

LIMIT OF NATIVE SEED MIX

EXISTING TREE TO REMAIN

NATIVE SEED MIX

SEE SHEET L4.02 FOR PLANTING SCHEDULE, NATIVE SEED MIX, AND DETAILS.

SEE SHEET L4.03 FOR TEMPORARY IRRIGATION DETAILS.

LANDSCAPE CONSTRUCTION LEGEND

KEY	DESCRIPTION	DETAIL NO:	DETAIL SHEET:
1	LANDSCAPE BOULDER	B	L4.02

NORTH

GRAPHIC SCALE

0 20 40

1 inch = 20'

95% REVIEW SET

REVISIONS

NO.	DATE	DESCRIPTION

PLANTING PLAN

CITY OF SAN ANTONIO
PIPERS MEADOW PARK
SAN ANTONIO, TEXAS

DUNAWAY
118 Broadway • Suite 201 • San Antonio, Texas 78205
Tel: 210.267.5246
(TX REG. F-1114)

PRELIMINARY
FOR REVIEW ONLY
These documents are for Design Review and not intended for Construction, Bidding or Permit Purposes. They were prepared by, or under the supervision of:
Bryan Kye Mask
L.A.# 2369

JOB NO.	3677.006
DESIGNED BY:	TL
DRAWN BY:	EO
CHECKED BY:	JM
DATE:	March 7, 2019
SHEET:	L4.01

FULL PATH: C:\Production\5050\5050\3677\5050PLA\Drawings\Plot Sheets\Production\5050\5050\3677\5050PLA\Drawings\Plot Sheets\3677-006-Planting Plan
FILENAME: 3677-006-Planting Plan.dwg
PLOTTED BY: Edgar Ortega
PLOTTED ON: Thursday, February 28, 2019
PLOTTED AT: 12:24:27 PM
PLOTTED WITH: AutoCAD Plot (High Quality Print).pc3

LANDSCAPE NOTES:

1. ALL PLANTED AREAS SHALL BE WATERED WITH AN UNDERGROUND IRRIGATION SYSTEM. THE IRRIGATION SYSTEM SHALL BE AUTOMATICALLY CONTROLLED WITH A FULLY PROGRAMMABLE ET BASED CONTROLLER WITH RAIN AND FREEZE SENSORS. THE IRRIGATION SYSTEM, AND INSTALLATION SHALL MEET ALL OF THE APPROPRIATE REQUIREMENTS OF THE LOCAL MUNICIPALITY.

2. ISOLATED PLANT MATERIAL TO RECEIVE DRIP TUBING IN A RING PATTERN AROUND THE ROOT BALL. WHERE POSSIBLE, ELIMINATE DRIP TUBING FROM LARGE AREAS VOID OF PLANT MATERIAL.

3. SOIL MIX FOR ALL PLANTING AREAS SHALL BE MANUFACTURED SOIL, CONSISTING OF MANUFACTURER'S BASIC TOPSOIL, BLENDED IN A MANUFACTURING FACILITY WITH SAND, STABILIZED ORGANIC SOIL AMENDMENTS, AND OTHER MATERIALS TO PRODUCE VIABLE PLANTING SOIL. MANUFACTURED SOIL SHOULD ACHIEVE PH OF 5 TO 7.5 AND MINIMUM OF 4 PERCENT ORGANIC-MATTER CONTENT, FRIABLE, AND WITH SUFFICIENT STRUCTURE TO GIVE GOOD TILL AND AERATION.

4. AMEND MANUFACTURER'S BASIC SOIL WITH SULFUR (1-1/2 POUNDS PER CUBIC YARD), AND COMMERCIAL FERTILIZER (1/2 POUND PER CUBIC YARD).

5. IN TREE AND SHRUB PLANTINGS, APPLY AMENDED SOIL TO MINIMUM DEPTH OF 12 INCHES. FOR TURF AREAS, TILL 2" OF AMENDED MANUFACTURER'S SOIL MIX INTO EXISTING SUBGRADE.
   - A) CONTRACTOR SHALL PREPARE AND FURNISH PROPER SUBGRADE ELEVATIONS FOR USE BY THE LANDSCAPE CONTRACTOR.
   - B) ALL TOPSOIL SHALL BE FREE OF STONES, ROOTS, CLODS, CONCRETE, BASE, CALICHE, CONSTRUCTION DEBRIS, AND ANY OTHER FOREIGN MATERIAL NOT BENEFICIAL FOR PLANT GROWTH

6. ALL TREES AND SHRUB AREAS TO BE MULCHED TO A DEPTH OF 4 INCHES WITH HARDWOOD DOUBLE-SHREDDED, NATIVE MULCH. MAINTAIN A 1FT CLEAR AREA FROM THE BASE OF THE TREE FREE OF MULCH TO ALLOW OXYGEN EXCHANGE.

7. GENERAL: MAINTAIN AND ESTABLISH TURF BY WATERING, FERTILIZING, WEEDING, MOWING, TRIMMING, REPLANTING, AND PERFORMING OTHER OPERATIONS AS REQUIRED TO ESTABLISH HEALTHY, VIABLE TURF. ROLL, REGRADE, AND REPLANT BARE OR ERODED AREAS AND REMULCH TO PRODUCE A UNIFORMLY SMOOTH TURF. PROVIDE MATERIALS AND INSTALLATION THE SAME AS THOSE USED IN THE ORIGINAL INSTALLATION. MAINTENANCE PERIOD FOR TURF AREAS ONLY IS 60 DAYS PAST SUBSTANTIAL COMPLETION.

8. MOW TURF AS SOON AS TOP GROWTH IS TALL ENOUGH TO CUT. REPEAT MOWING TO MAINTAIN SPECIFIED HEIGHT WITHOUT CUTTING MORE THAN ONE-THIRD OF GRASS HEIGHT. REMOVE NO MORE THAN ONE-THIRD OF GRASS-LEAF GROWTH IN INITIAL OR SUBSEQUENT MOWINGS.

9. TURF INSTALLATIONS SHALL MEET THE FOLLOWING CRITERIA AS DETERMINED BY LANDSCAPE ARCHITECT:
   - A) SATISFACTORY SODDED TURF: AT END OF MAINTENANCE PERIOD, A HEALTHY, WELL-ROOTED, EVEN-COLORED, VIABLE TURF HAS BEEN ESTABLISHED, FREE OF WEEDS, OPEN JOINTS, BARE AREAS, AND SURFACE IRREGULARITIES.
   - B) SATISFACTORY SEEDED TURF: AT END OF MAINTENANCE PERIOD, A HEALTHY, UNIFORM, CLOSE STAND OF GRASS HAS BEEN ESTABLISHED, FREE OF WEEDS AND SURFACE IRREGULARITIES, WITH COVERAGE EXCEEDING 90 PERCENT OVER ANY 10 SQ. FT. AND BARE SPOTS NOT EXCEEDING 5 BY 5 INCHES.

10. USE SPECIFIED MATERIALS TO REESTABLISH TURF THAT DOES NOT COMPLY WITH REQUIREMENTS, AND CONTINUE MAINTENANCE UNTIL TURF IS SATISFACTORY.

11. SPECIAL WARRANTY: INSTALLER AGREES TO REPAIR OR REPLACE PLANTINGS AND ACCESSORIES THAT FAIL IN MATERIALS, WORKMANSHIP, OR GROWTH WITHIN SPECIFIED WARRANTY PERIOD.
    - A) FAILURES INCLUDE, BUT ARE NOT LIMITED TO, THE FOLLOWING:
      - A)A) DEATH AND UNSATISFACTORY GROWTH, EXCEPT FOR DEFECTS RESULTING FROM ABUSE, LACK OF ADEQUATE MAINTENANCE, OR NEGLECTED BY OWNER.
      - A)B) STRUCTURAL FAILURES INCLUDING PLANTINGS FALLING OR BLOWING OVER.
    - B) WARRANTY PERIODS: FROM DATE OF SUBSTANTIAL COMPLETION.
      - B)A) TREES, SHRUBS, VINES, AND ORNAMENTAL GRASSES: 12 MONTHS.
      - B)B) GROUNDCOVERS, BIENNIALS, PERENNIALS, AND OTHER PLANTS: 12 MONTHS.

12. LANDSCAPE CONTRACTOR SHALL NOTIFY THE LANDSCAPE ARCHITECT OF ANY QUESTIONS REGARDING APPLICATION OF PROPOSED PLANT MATERIAL PRIOR TO INSTALLATION - ESPECIALLY QUESTIONS THAT MAY AFFECT OR ALTER THE WARRANTY OF SAID MATERIAL.

13. STAKE OR GUY TREES ONLY IF THEY ARE NOT ABLE TO STAND VERTICAL ON THEIR OWN.

14. REMOVE ALL STONES AND DEBRIS LARGER THAN 1 INCH IN ANY DIMENSION ON THE SURFACE IN AREAS WHERE TURF IS APPLIED.

15. ALL QUANTITIES SHOWN ON PLANS TO BE VERIFIED BY LANDSCAPE CONTRACTOR. LANDSCAPE CONTRACTOR SHALL BE RESPONSIBLE FOR INSTALLING ALL LABELED PLANT MATERIAL ON PLANS.

16. ALL FINAL SHAPING AND RAKING OF THE TOPSOIL/FINISH GRADES SHALL BE REVIEWED BY OWNER OR LANDSCAPE ARCHITECT PRIOR TO APPLICATION OF PLANT MATERIAL. BERMS, IF REQUIRED SHALL BE INSTALLED IN 12 INCH LAYERS/LIFTS AND COMPACTED. EXCESSIVE SLOPES ON BERMS WHICH MAY CAUSE MAINTENANCE PROBLEMS SHALL BE REVIEWED BY THE LANDSCAPE ARCHITECT.

17. VERIFY EXISTENCE OF UNDERGROUND UTILITIES PRIOR TO EXCAVATION FOR SITE WORK AND PLANTING.

18. CONTRACTOR SHALL TAKE ALL NECESSARY STEPS TO PROTECT EXISTING UTILITIES AT ALL TIMES.

19. INSTALL IRRIGATION SYSTEM PRIOR TO APPLICATION OF TOPSOIL OR PLANTING SOIL MIX.

20. ANY EXISTING SITE IMPROVEMENT OR UTILITY REMOVED, DAMAGED, OR UNDERCUT BY THE CONTRACTOR'S OPERATIONS SHALL BE REPAIRED OR REPLACED AS DIRECTED BY THE CONTRACTING OFFICER'S REPRESENTATIVE AND APPROVED BY THE RESPECTIVE UTILITY AT THE CONTRACTOR'S EXPENSE.

21. CONTRACTOR SHALL BE RESPONSIBLE FOR RESTORING TO ITS ORIGINAL OR BETTER CONDITION ANY DAMAGES DONE TO EXISTING FENCES, CONCRETE ISLANDS, STREET PAVING, CURBS, SHRUBS, TREES, DRIVEWAYS, ETC., SCHEDULE TO REMAIN (NO SEPARATE PAY ITEM).

22. TREES WHICH ARE DAMAGED OR LOST DUE TO THE CONTRACTOR'S NEGLIGENCE DURING CONSTRUCTION SHALL BE MITIGATED AND REPLACED AT CONTRACTOR'S EXPENSE.

23. TREES MUST BE MAINTAINED IN GOOD HEALTH THROUGHOUT THE CONSTRUCTION PROCESS. MAINTENANCE MAY INCLUDE, BUT IS NOT LIMITED TO: WATERING THE ROOT PROTECTION ZONE, WASHING FOLIAGE, FERTILIZATION, PRUNING, ADDITIONAL MULCH APPLICATIONS, AND OTHER MAINTENANCE AS NEEDED ON THE PROJECT.

24. ALL DISTURBED AREAS WITHIN LIMITS OF CONSTRUCTION SHALL BE HYDROMULCHED AS DESCRIBED ON PLANS.

25. ROOTS SHALL BE CUT WITH A ROCK SAW OR BY HAND, NOT BY AN EXCAVATOR OR OTHER ROAD CONSTRUCTION EQUIPMENT.

26. METAL EDGER: COL-MET COMMERCIAL GRADE STEEL EDGING $\frac{3}{16}$" THICK. INSTALL PER MANUFACTURERS RECOMMENDATIONS.

27. PLANTS, SOIL, MULCH, AND ANY OTHER MATERIALS OR TOOLS NEEDED TO COMPLETE THE PLANTING AND IRRIGATION PLANS SHALL NOT BE STORED WITHIN THE ROOT ZONE OF EXISTING TREES.

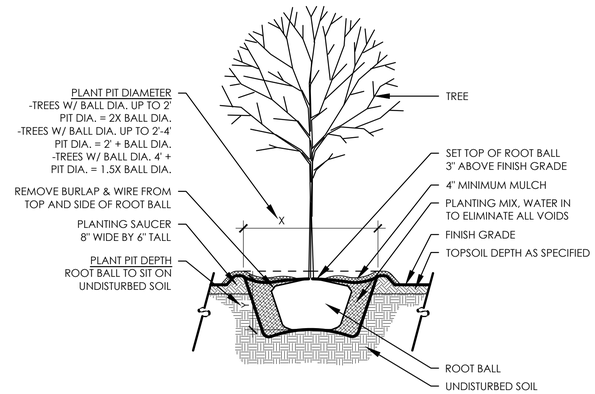

A **TREE PLANTING** SCALE: 1/2" =1'-0"

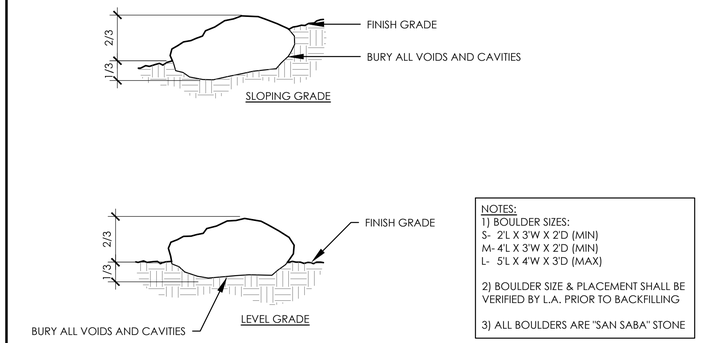

NOTES:
1) BOULDER SIZES:
S- 2'L X 3'W X 2'D (MIN)
M- 4'L X 3'W X 2'D (MIN)
L- 5'L X 4'W X 3'D (MAX)

2) BOULDER SIZE & PLACEMENT SHALL BE VERIFIED BY L.A. PRIOR TO BACKFILLING

3) ALL BOULDERS ARE "SAN SABA" STONE

B **LANDSCAPE BOULDER DETAIL** SCALE: 1" = 1'-0"

Midway Grass Mix TM		Native American Seed
Scientific Name	Common Name	PLS rates (lbs/acre)
Amblyolepis setigera (Helenium)	Huisache Daisy	
Andropogon glomeratus	Bushy Bluestem	
Aristida purpurea var. longiseta	Red Threeawn	
Aristida purpurea var. wrightii	Purple Threeawn	
Bothriochloa barbindois	Cane Bluestem	
Bouteloua curtipendula	Sideoats Grama	
Bouteloua hirsuta va. Pectinata	Tall Grama	
Bouteloua rigideseta	Texas Grama	
Bouteloua trifida	Red Grama	
Buchloe dactyloides	Buffalograss	
Chloris cucullata	Hooded Windmillgrass	
Digitaria californica	Arizona cottontop	
Elymus canadensis	Prairie Wildrye	
Eragrostis secundiflora	Red Love Grass	
Eragrostis trichodes	Sand Lovegrass	
Eriochloa sericea	Texas Cupgrass	
Hilaria belangeri var. belangeri	Curly Mesquite	
Leptochloa dubia	Green Sprangletop	
Nassella leucotricha	Texas Wintergrass	
Panicum hallii	Halls Panicum	
Pascopyrum smithii	Western Wheatgrass	
Ratibida columnifera	Prairie Coneflower	
Salvia farinacea	Mealy Bluesage	
Setaria vulpiseta	Plains Bristlegrass	
Sporobolus cryptandrus	Sand Dropseed	
Thelesperma filifolium	Greenthread	
Tridens albescens	White Tridens	
Tridens muticus	Slim Tridens	
	Pls rates (lbs/acre)	20.00

** Custom Mix eliminate from standard mix:*		
Standing Cypress		
Maximillian Sunflower		
Tall Goldenrod		
	Total PLS Rates	30.00

Butterfly Retreat Seed Mix TM		Native American Seed
Scientific Name	Common Name	PLS rates (lbs/acre)
Amblyolepia setigera	Huisache Daisy	
Ascelepias asperida	Antelope Horns	
Asclepias incarnata	Swamp Milkweed	
Asclepias speciosa	Showy Milkweed	
Asclepias syriaca	Common Milkweed	
Asclepias tuberosa	Butterfly Weed	
Asclepias viridis	Green Milkweed	
Callirhoe involucrata	Winecup	
Callirhoe leiocarpa	Annual Winecup	
Centaurea americana	American Basketflower	
Chamaecrista fasciculata	Patridge Pea	
Coreopsis basilis	Golden-Wave	
Coreopsis lanceolata	Lanceleaf Coreopsis	
Dalea purpurea var. purpera	Purple Prairie Clover	
Desmanthus illinoensis	Illinois Bundleflower	
Echinacea purpurea	Purple Coneflower	
Engelmannia peristenia	Cutleaf Daisy	
Gaillardia pulchella	Indian Blanket	
Glandularia bipinnatifida	Prairie Verbena	
Liatris mucronata	Gayfeather	
Lupinus texensis	Texas Bluebonnet	
Machaeranthera tanacetifolia	Tahoka Daisy	
Monarda citridora	Lemon Mint	
Penstemon cobaea	Foxglove	
Rudbeckia hirta	Black-eyed Susan	
Salvia coccinea	Scarlet Sage	
Thelesperma filifolium	Greenthread	
	Pls rates (lbs/acre)	10.00

PLANT SCHEDULE

TREES	QTY	COMMON NAME	BOTANICAL NAME	CALIPER	HEIGHT	SPREAD
ELM	2	CEDAR ELM	ULMUS CRASSIFOLIA	3"	12'-14'	5'-7'
OAK	3	LIVE OAK	QUERCUS VIRGINIANA	3"	12'-14'	5'-7'

GROUND COVERS	QTY	COMMON NAME	BOTANICAL NAME	SIZE	REMARKS
NSM	21,855 SF	NATIVE SEED MIX	NATIVE SEED MIX	SEED MIX	1 lb/2000 SF - Native American Seed, 325-446-3600.

Mandatory Criteria

Parking Lot Shading

Total Paved Area	2236 SF		
Square Feet of Shaded Area for 25%	559 SF	Minimum required	20 Points
Square Feet of Shaded Area for 35%	670.8 SF	Additional	5 Points
Square Feet of Shaded Area for 50%	1118 SF	Additional	15 Points
SF Required			
Existing Tree Shade Credits	875		
Proposed Tree Shade Credits	1312.5		
Total Shade Credits	2187.5		
Parking Lot Shading Points Earned	35		

Tree Preservation Credit Table

SY= Street Yard

Point Calculations	Full Credit in SY	QTY	Total	Half Credit in SY	QTY	Total	Half Credit out side SY	QTY	Total
Caliper equal to or exceeding 4" but less than 6"	3	0	0	1.5	0	0	1.5	0	0
Caliper equal to or exceeding 6" but less than 12"	4	2	8	2	0	0	2	1	2
Caliper equal to or exceeding 12" but less than 18"	6	0	0	3	0	0	3	0	0
Caliper equal to or exceeding 18"	8	3	24	4	0	0	4	2	8
		Subtotal	32		Subtotal	0		Subtotal	10
		Max 30 Pts	30		Max 30 Pts.	0		Max 15 Pts.	10
	Total Preservation Points		40						

Elective Criteria

Landscape Points	PTS
Existing Trees	40
Parking Lot Shading	35
Screening of Surface Parking	0
Street Trees	0
Understory Preservation	0
Total Points	75

Existing Tree Credit for Parking Lot Shading

KEY	Species	ShadeCredit
378	Elm	875
	Total SF Credit =	875

Proposed Trees Planted 12 feet from Parking Lot 50% Credit

QTY	Species	Shade Credit	Total
2	Live Oak	437.5	875
1	Cedar Elm	437.5	437.5
		Total SF Shade =	1312.5

95% REVIEW SET

REVISIONS		
NO.	DATE	DESCRIPTION

PLANT LIST, NOTES & DETAILS

CITY OF SAN ANTONIO
PIPERS MEADOW PARK
SAN ANTONIO, TEXAS

DUNAWAY
118 Broadway • Suite 201 • San Antonio, Texas 78205
Tel: 210.267.5246
(TX REG. F-1114)

PRELIMINARY
FOR REVIEW ONLY
These documents are for Design Review and not intended for Construction, Bidding or Permit Purposes. They were prepared by, or under the supervision of:
Bryan Kye Mask
L.A.# 2369

JOB NO.	3677.006
DESIGNED BY:	TL
DRAWN BY:	EO
CHECKED BY:	JM
DATE:	March 7, 2019
SHEET:	L4.02

FILE PATH: G:\Production\0500\0500\3677\0500\Autodwg\Plot Sheets\Production\0500\0500\3677\0500\Autodwg\Plot Sheets\3677.006-Planting Plan
FILENAME: 3677.006-Planting Plan.dwg
PLOTTED BY: Edgar Ortega
LAST SAVED: Thursday, February 28, 2019
PLOTTED ON: 12-24-31 PM
PLOTTED WITH: AutoCAD PDF (High Quality Print).pc3

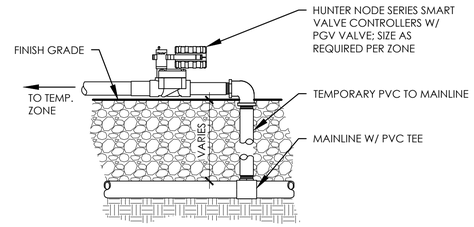

A TEMPORARY CONTROLLER/VALVE

SCALE: NTS

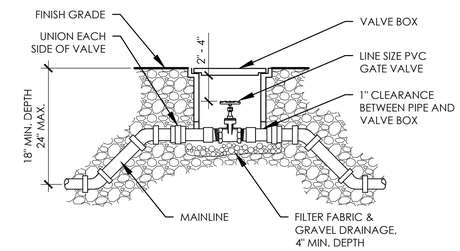

B MANUAL ISOLATION VALVE

SCALE: NTS

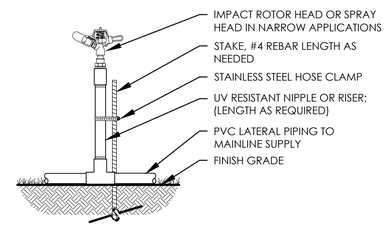

NOTES:

1. TEMPORARY IRRIGATION SYSTEM SHALL BE INSTALLED BY A TEXAS STATE LICENSED IRRIGATOR.
2. ALL COVERAGE SHALL BE HEAD TO HEAD.
3. SYSTEM SHALL BE DESIGNED TO AVOID ANY OVERSPRAY ONTO SIDEWALKS AND STREETS.
4. TEMPORARY IRRIGATION SYSTEM ZONE VALVES SHALL BE HUNTER NODE CONTROLLER, CONTRACTOR SHALL CLUSTER VALVE LOCATIONS WHERE POSSIBLE TO COMBINE ZONES ON MULTIPLE VALVE CONTROLLERS (NODE-200, NODE-400, ETC...)
5. CONTRACTOR SHALL VERIFY ON-SITE AND BY CONSULTING WITH LANDSCAPE ARCHITECT AREAS THAT WILL REQUIRE TEMPORARY IRRIGATION PRIOR TO INSTALLATION OF SYSTEM.
6. USE #4 REBAR ROD TO HOLD PIPE SECURELY IN PLACE. INSTALL AT INTERVALS AS REQUIRED TO SECURE ROTOR HEADS.

C LARGE TURF AREA TEMP. HEAD

SCALE: NTS

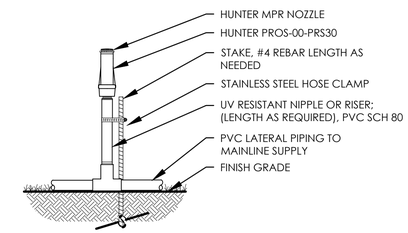

NOTES:

1. TEMPORARY IRRIGATION SYSTEM SHALL BE DESIGNED BY A TEXAS STATE LICENSED IRRIGATOR AND SHALL BE SUBMITTED FOR APPROVAL BY THE LANDSCAPE ARCHITECT PRIOR TO INSTALLATION.
2. ALL COVERAGE SHALL BE HEAD TO HEAD.
3. SYSTEM SHALL BE DESIGNED TO AVOID ANY OVERSPRAY ONTO SIDEWALKS AND STREETS.
4. TEMPORARY IRRIGATION SYSTEM ZONE VALVES SHALL BE HUNTER NODE CONTROLLER VALVES, CONTRACTOR SHALL CLUSTER VALVE LOCATIONS WHERE POSSIBLE TO COMBINE ZONES ON MULTIPLE VALVE CONTROLLERS (NODE-200, NODE-400, ETC...)
5. NO PIPING SHALL BE RUN WITHIN THE PROTECTION ZONE OF EXISTING TREES UNLESS APPROVED BY LANDSCAPE ARCHITECT.
6. CONTRACTOR SHALL VERIFY ON-SITE AND BY CONSULTING WITH LANDSCAPE ARCHITECT AREAS THAT WILL REQUIRE TEMPORARY IRRIGATION PRIOR TO DESIGN AND INSTALLATION OF SYSTEM.
7. USE #4 X 24" REBAR ROD WITH "J" HOOKED RADIUS AT ONE END TO HOLD PIPE SECURELY IN PLACE. INSTALL AT INTERVALS OF 10 FEET.

D SMALL TURF AREA TEMP. HEAD

SCALE: NTS

95% REVIEW SET

REVISIONS

NO.	DATE	DESCRIPTION

TEMPORARY IRRIGATION NOTES & DETAILS

CITY OF SAN ANTONIO
PIPERS MEADOW PARK
SAN ANTONIO, TEXAS

DUNAWAY
118 Broadway • Suite 201 • San Antonio, Texas 78205
Tel: 210.267.5246
(TX REG. F-1114)

PRELIMINARY
FOR REVIEW ONLY
These documents are for Design Review and not intended for Construction, Bidding or Permit Purposes. They were prepared by, or under the supervision of:
Bryan Kye Mask
L.A.# 2369

JOB NO.	3677.006
DESIGNED BY:	TL
DRAWN BY:	EO
CHECKED BY:	JM
DATE:	March 7, 2019
SHEET:	L4.03

FULL PATH: G:\Production\0050\0500\3677\5900\Acad\Drawings\Plot Sheets\G:\Production\0500\0500\3677\5900\Acad\Drawings\Plot Sheets\3677.006-Planting Plan
FILENAME: 3677.006-Planting Plan.dwg
PLOTTED BY: Edgar Ortega
PLOTTED ON: Thursday, February 28, 2019
PLOTTED AT: 12:24:39 PM
PLOTTED WITH: AutoCAD-PDF (High Quality Print).pc3

Specifications of Materials
Pipers Creek Meadow

HDRC Submittal

Issued March 1, 2019

DUNAWAY

TABLE OF CONTENTS

SITE FURNITURE

MAGLIN BIKE RACK – MBR500-S

MAGLIN BENCH – MLB970-W

MAGLIN PICNIC TABLE – MLP210-S-R-WCA

MAGLIN RECYCLING RECEPTACLE – MLWR200-32-BC

MAGLIN TRASH RECEPTACLE – MLWR200-32-ST

WORKING WITH MAGLIN CORPORATION – INFO

MAGLIN STANDARD POWDERCOAT COLORS

DOG WASTE STATION – DEPOT-023

SITE ELEMENTS

MOST DEPENDABLE FOUNTAINS, INC. – DRINKING FOUNTAIN MODEL 440 SM

MOST DEPENDABLE FOUNTAINS, INC. – COLOR CHART

SITE LIGHTING

VISIONAIRE LIGHTING LLC – PAVILION II LIGHT

PLAYGROUND EQUIPMENT (POSSIBLE ALTERNATE)

PLAY & PARK STRUCTURES – ENCHANTED FOREST (20-109421)

PLAY & PARK STRUCTURES – SECRET EGRET (30-104168)

500 SERIES

MBR500-S

MATERIALS: All parts are made from H.S. steel tube.

FINISH: All steel components are protected with E-Coat rust proofing.
The Maglin Powdercoat System provides a durable finish on all metal surfaces.

INSTALLATION: The bike rack is delivered pre-assembled. It is available with either a surface mount or direct burial installation option.

TO SPECIFY: Select MBR500-S
Choose:
- Powdercoat Color

Galvanized Finish
- Surface Mount (MBR500-S-G)

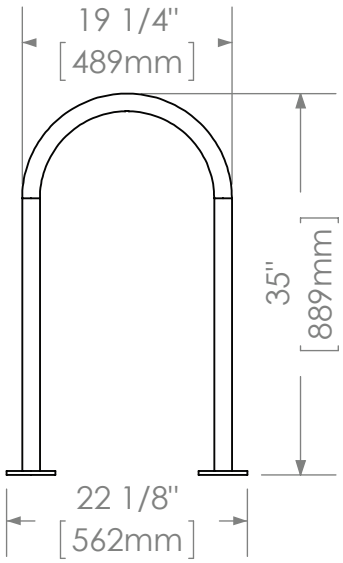

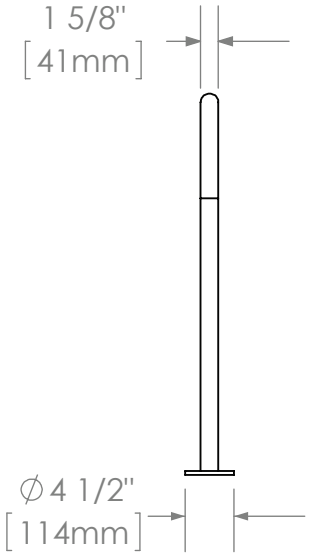

DIMENSIONS:

Height:	35” (88.9cm)
Length:	19.25” (48.9cm)
Weight:	13.27lbs (6.0kg)

MAGLIN

T 800-716-5506
F 877-260-9393
WWW.MAGLIN.COM
SALES@MAGLIN.COM

- All drawings, specifications, design and details on this page remain the property of Maglin Site Furniture Inc. and may not be used without Maglin authorization.
- Details and specifications may vary due to continuing improvements of our products.

970 SERIES

MLB970-W

MATERIALS: Bench ends are made from solid cast aluminum. The seat employs 2.625” x 1” and 5.5” x 1” (actual) Ipe Slats.

FINISH: The Maglin Powdercoat System provides a durable finish on all metal surfaces. Wood slats are treated with penetrating sealers.

INSTALLATION: The bench is delivered pre-assembled. Holes (0.5") are provided in each foot for securing to base.

TO SPECIFY: Select MLB970-W
Choose:
- Powdercoat Color

OPTIONS:
- Plaque
- Skate Deterrent
- Center Arm

DIMENSIONS:

Height:	33 1/8” (84.2 cm)
Length:	70”” (177.8 cm)
Depth:	23” (58.4 cm)
Weight:	111.81lbs (50.7kg)

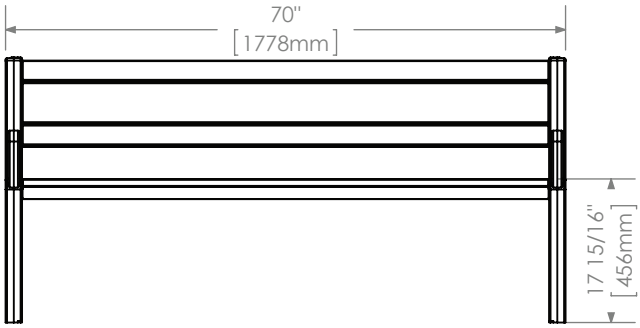

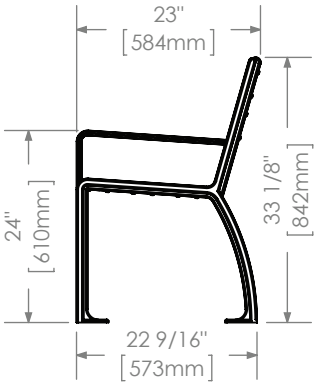

MAGLIN

T 800-716-5506
F 877-260-9393
WWW.MAGLIN.COM
SALES@MAGLIN.COM

- All drawings, specifications, design and details on this page remain the property of Maglin Site Furniture Inc. and may not be used without Maglin authorization.
- Details and specifications may vary due to continuing improvements of our products.

210 SERIES

MLPT210-S-R-WCA

MATERIALS: Table frame is made from 3" x 2-3/8" structural I-Beam with mitered corners.
Horizontal support beams are used for superior stability and structural integrity. Surface material is recycled plastic.

FINISH: All steel components are protected with E-coat rust proofing. The Maglin Powdercoat System provides a durable final finish on all metal surfaces.

INSTALLATION: The table is delivered pre-assembled. Holes (0.5") are provided for securing to base.

TO SPECIFY: Choose:
- Powdercoat Color

OPTIONS:
- Gaming board (GB)
- Wheelchair Accessibility (WCA)
- IPE Wood (W)
- Surface Mount (S)

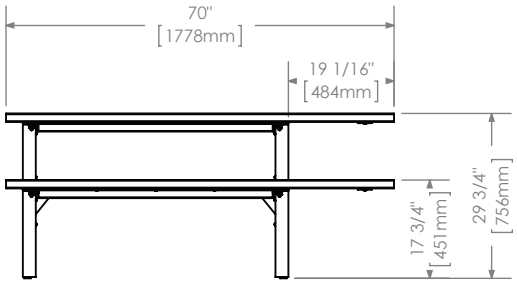

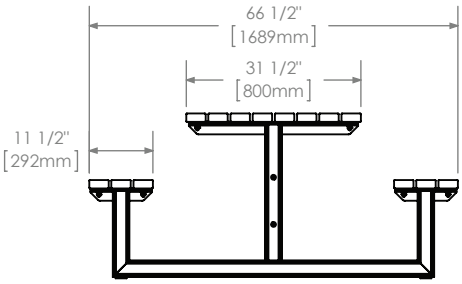

DIMENSIONS:

Table Height:	29.75" (75.6cm)
Length:	70.00" (177.8cm)
Table Width:	31.5" (80.0cm)
Total Width:	66.5" (168.9cm)
Weight:	394.54lb (179kg)

MAGLIN

T 800-716-5506
F 877-260-9393
WWW.MAGLIN.COM
SALES@MAGLIN.COM

- All drawings, specifications, design and details on this page remain the property of Maglin Site Furniture Inc. and may not be used without Maglin authorization.
- Details and specifications may vary due to continuing improvements of our products.

200 SERIES

MLWR200-32-BC

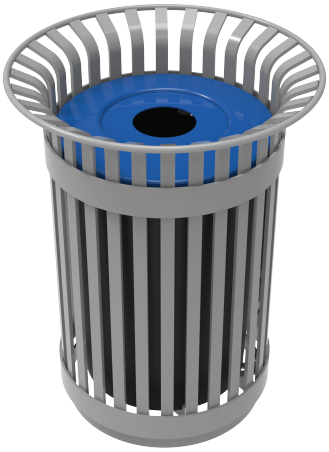

MATERIALS: The trash container frame is constructed using heavy duty steel flat bar.
A 32 gallon commercial grade plastic liner and standard metal lid are provided.

FINISH: All steel components are protected with E-Coat rust proofing.
The Maglin Powdercoat System provides a durable finish on all metal surfaces.

INSTALLATION: The trash container is delivered pre-assembled. Holes (0.5") are provided in each mounting foot for securing to base.

TO SPECIFY: Select MLWR200-32-BC
Choose:
- Powdercoat Color
- Bottle/Can Slot Lid (BC) or lid options shown below

OPTIONS:
- Standard Lid (ST)
- Paper Slot Lid (PS)
- Side Ash Receptacle (SA)
- Dome Lid (DL32)
- Side Opening (MLWR200S-32)

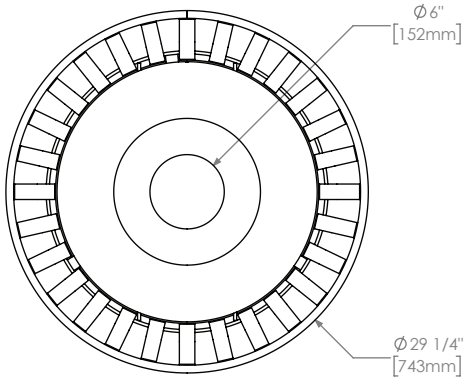

TOP VIEW

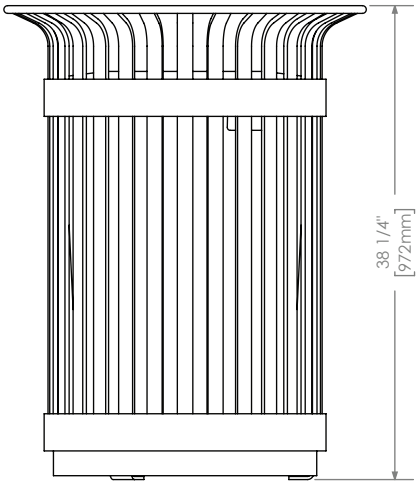

DIMENSIONS:

Height:	38.25” (97.2cm)
Outer Radius:	29.25” (74.3cm)
Inner Radius:	6” (15.2cm)
Weight:	199.05lbs (90.3kg)

MAGLIN

T 800-716-5506
F 877-260-9393
WWW.MAGLIN.COM
SALES@MAGLIN.COM

- All drawings, specifications, design and details on this page remain the property of Maglin Site Furniture Inc. and may not be used without Maglin authorization.
- Details and specifications may vary due to continuing improvements of our products.

200 SERIES

MLWR200-32-ST

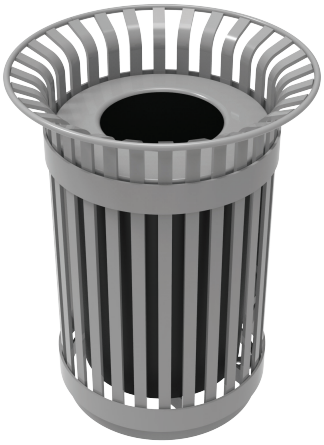

MATERIALS: The trash container frame is constructed using heavy duty steel flat bar.
A 32 gallon commercial grade plastic liner and standard metal lid are provided.

FINISH: All steel components are protected with E-Coat rust proofing.
The Maglin Powdercoat System provides a durable finish on all metal surfaces.

INSTALLATION: The trash container is delivered pre-assembled. Holes (0.5") are provided in each mounting foot for securing to base.

TO SPECIFY: Select MLWR200-32-ST
Choose:
- Powdercoat Color
- Standard Lid (ST) or lid options listed below.

OPTIONS:
- Dome Lid (DL32)
- Paper Slot Lid (PS)
- Bottle/Can Slot Lid (BC)
- Side Ash Receptacle (SA)
- Side Opening (MLWR200S-32)

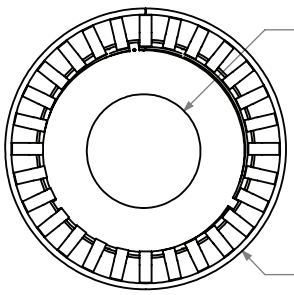

TOP VIEW

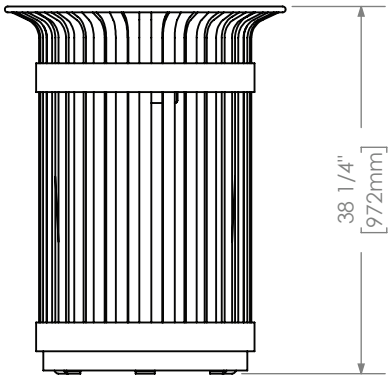

DIMENSIONS:

Height:	38.25" (97.2cm)
Outer Radius:	29.25" (74.3cm)
Inner Radius:	11.88" (30.2cm)
Weight:	198.27lbs (90kg)

MAGLIN

T 800-716-5506
F 877-260-9393
WWW.MAGLIN.COM
SALES@MAGLIN.COM

- All drawings, specifications, design and details on this page remain the property of Maglin Site Furniture Inc. and may not be used without Maglin authorization.
- Details and specifications may vary due to continuing improvements of our products.

Working with Maglin Corporation

Doing Business As

Maglin Site Furniture

Please use the below address for Purchase Orders,
Payment Remittance, and Vendor Account Setup:

Maglin Corporation
999 18th Street, Suite 3000
Denver, CO
80202

Payment Terms:

Maglin Corporation will offer payment terms of Net 30 on approved credit. A credit application must be completed and final approval is determined by Maglin Corporation credit department. Manufacturing will not commence until credit is established or full payment received. Maglin Corporation reserves the right to cease credit terms at any time, at the sole discretion of Maglin Corporation. Payment may also be made in advance of manufacturing via check, VISA, MasterCard, AMEX, or Automated Clearing House (ACH). Custom orders require a deposit upon acceptance of order.

Documents:

Purchase Orders should be addressed to the legal entity listed above. Purchase Orders must be signed and include payment terms outlined on Maglin Corporation quote. Products must be listed on purchase order or the quote number referenced.

Taxes:

Quoted taxes are estimates only. When applicable, taxes will be applied to final invoices. If your project is tax exempt, please forward a tax exempt certificate when completing your order documents.

Cancellation fee:

Maglin Corporation is a made to order company, and requests to cancel orders will be subject to a 25% restocking fee. Custom order deposits are non-refundable.

Working with Maglin Corporation

Doing Business As Maglin Site Furniture

Warranty:

All Maglin Corporation products are warrantied for 5 years against defects in materials, coatings and workmanship. Warranty does not cover damage from vandalism or poor handling during the installation process. Please ensure that products are not dragged on concrete or other hard surfaces that will scratch the outside layers of protective coatings. When installing anchor bolts, provide care that bolts are not fastened so tightly that protective coatings become cracked. For complete care and maintenance and warranty policy, visit the Maglin Corporation website www.maglin.com.

Lead Time:

Production of order commences upon receipt of signed Order Confirmation/executed Purchase Order, and approved credit. When applicable, signed approval drawings and deposit will be required. Lead time on standard products is 6 to 8 weeks. All non-standard products are subject to a 10 to 12 week lead time (from receipt of approval drawings). Lead time is an approximation and Maglin Corporation is not responsible for site delays. Orders will ship upon fabrication completion. A one week grace period may be requested, however storage fees will apply after this time.

Delivery:

Maglin Corporation is a material/product supply-only company and therefore offloading is the responsibility of the receiver. All packages are to be inspected at time of delivery. In the event that there are any damages or missing product, the bill of lading must be noted and Maglin Corporation expects notification within 48 hours. Lift gate delivery is available on most orders – advise at the time of order, if this is a requirement. Please notify your Maglin Corporation representative if you are able to accept stacked freight at the shipping address – a forklift or loading dock is required.

Installation Hardware:

Maglin Corporation recommends that all products be bolted to the ground. Mounting hardware is not supplied with products and local codes should be researched prior to installation. Anchor bolt packages may be purchased with an order – contact your Maglin Corporation representative for information and purchase. Installation instructions and product information is available on the Maglin Corporation website www.maglin.com or from your sales representative.

our colors

Standard Powdercoat Colors

GLOSS

SILVER 14 | EVERGREEN | BLACK | GUNMETAL | BRONZE 14 | TITANIUM | GRAPHITE

FINE TEXTURED* (Matte Finish)

SILVER 14 | EVERGREEN | BLACK | GUNMETAL | BRONZE 14 | TITANIUM | SLATE | CORE TEN

OTHER COLORS AVAILABLE**

ORANGE | IVORY | TURQUOISE | YELLOW | LILAC | AUTUMN | BLUE | GREEN

GREY | RED

*Fine Textured Paint available for an upcharge. Vinyl graphics are not recommended on Fine Textured Powdercoat
**Paint upcharge may apply depending on quantities ordered
Due to variations in screen resolution, color swatches may vary slightly from actual colors. Please contact Maglin for samples.

Account Login forgot password?

email password

0

$0.00

Accept Credit Card Payments

Black Green

MINI DOG WASTE STATION w/ONEpul® BAG SYSTEM - DEPOT-023

(5 of 5 bones)

OUR CHEAP PRICE **$127.99**

Mini Dog Waste Station with ONEpul® Bag System is the
same as our Full Stations, except it does **NOT** come with a waste can. Great for locations that have a nearby trash can.

Comes with:

- Sign
- Post
- Bag Dispenser
- 400 **ONEpul®** Bags
- **Installation Instructions**
- Hardware

Aluminum/Metal, Commercial Grade – not poly plastic!

Choose GREEN or **Black,** Screen-Printed and Powder Coated to last! Built for Professional Property Managers and Municipalities.

CHEAP PRICES:
1-4 $ 127.99 ea
5-9 $ 124.99 ea
10+ $ 121.99 ea

*****ALWAYS FREE SHIPPING*****

As low as $121.99 is an incredible value!
Nobody beats our prices!

This is the **ONEpul® Bag** version.

Item #: DEPOT-023

If you prefer the Roll Bag system, select the Roll Bag Mini Station **Item# – DEPOT-**

FREE SHIPPING EVERY ORDER
Click for details

Order Toll FREE
800 678 1612

5 YEAR GUARANTEE
On ALL DOG WASTE STATIONS

007

ONEpul® is a registered Trademark of ZW USA INC. All rights reserved.

Select Color Green

Qty:

Compare Tool

email to a friend add to favorites

related products ratings & reviews more info

ONEpul® DOG WASTE BAGS - BOX of 800 - DEPOT-020

2 reviews

List: ~~$59.99~~
Price: $42.99

add view

ONEpul® DOG WASTE BAGS - Case of 3200 - DEPOT-021

1 reviews

List: ~~$168.00~~
Price: $99.99

add view

The MittN BAG™ HEADER DOG WASTE BAGS - Case of 2000 - DEPOT-999

1 reviews

List: ~~$129.00~~
Price: $69.99

add view

Product Categories

dog waste bags
bag dispensers
dog waste stations
waste can liners
mini station
cans posts signs

Site Map

about
why buy from DWD
testimonials
specials
faqs
privacy policy
return policy
faqs

MOST DEPENDABLE FOUNTAINS, INC.
5705 COMMANDER DR. P.O. BOX 587
ARLINGTON, TN 38002-0587
PHONE: (901) 867-0039
FAX: (901) 867-0159
www.mostdependable.com

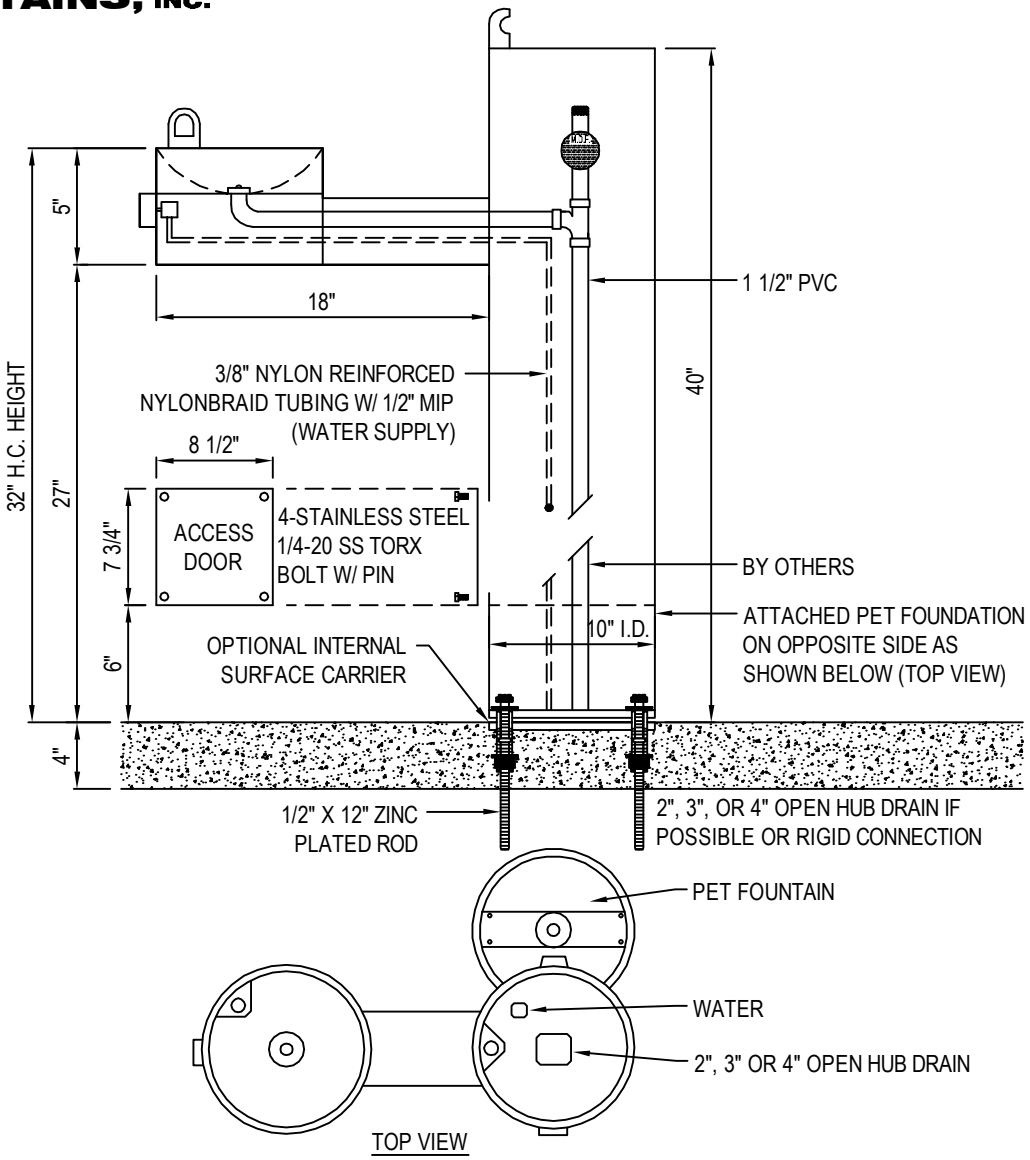

NOTES:

1. MEETS ADA REGULATIONS.
2. OPTIONAL STAINLESS STEEL SURFACE CARRIER RECOMMENDED.
3. SHOWN WITH OPTIONAL 10 STAINLESS STEEL SURFACE CARRIER, ATTACHED PET FOUNTAIN.
4. INSTALLATION TO BE COMPLETED IN ACCORDANCE WITH MANUFACTURER'S SPECIFICATIONS.
5. DO NOT SCALE DRAWING.
6. THIS DRAWING IS INTENDED FOR USE BY ARCHITECTS, ENGINEERS, CONTRACTORS, CONSULTANTS AND DESIGN PROFESSIONALS FOR PLANNING PURPOSES ONLY. THIS DRAWING MAY NOT BE USED FOR CONSTRUCTION.
7. ALL INFORMATION CONTAINED HEREIN WAS CURRENT AT THE TIME OF DEVELOPMENT BUT MUST BE REVIEWED AND APPROVED BY THE PRODUCT MANUFACTURER TO BE CONSIDERED ACCURATE.
8. CONTRACTOR'S NOTE: FOR PRODUCT AND COMPANY INFORMATION VISIT www.CADdetails.com/info AND ENTER REFERENCE NUMBER 3354-1.51.

MODEL 440 SM

SHOWN W/ OPTIONAL SS SURFACE CARRIER, PF

PROTECTED BY COPYRIGHT © 2018 CADDETAILS.COM LTD. CADdetails.com

AVAILABLE COLORS

BLUE

GREEN

RED

ORANGE

BROWN

YELLOW

BLACK

WHITE

CHROME

TEXTURED BLACK

TEXTURED BURGUNDY

TEXTURED COPPER

TEXTURED EMERALD

TEXTURED GOLD VEIN

TEXTURED PYRITE

TEXTURED SANDSTONE

TEXTURED SAPPHIRE

PAVILION II LED Specifications

Project Name:

PIPERS MEADOW

Catalog Number:

Type:

The Pavilion II LED series is a versatile and contemporary fixture ideal for architectural applications where scale and style are essential.

Two cap choices combined with three shapes of shades; allow for a number of design options. The decorative rings are cast aluminum.

Durable polyester powder coat finish is available in an array of architectural colors.

The Pavilion II series is an elegant choice for parks, retail settings, restaurants, marinas and sports arenas.

Ordering Information

MODEL	OPTICS	SOURCE	CURRENT	KELVIN	VOLTAGE	MOUNTING	FINISH	CAP/SHADE	OPTIONS
PD-L	T5	32LC	3	3K	UNV	AM	BZ	C1-H2	PC-120
PD-L	**T1** **T2** **T3** **T4** **T5** **T5W**	**32LC** **48LC** **64LC** **80LC** **96LC**	**3** 350mA **5** 530mA	**3K** 3000K **4K** 4000K **5K** 5000K	**UNV** *120-277V **8** 347V **5** 480V	**AM** Arm Mount **YM1** Yoke Mount 1 Bar **YM2** Yoke Mount 2 Bars **WM** Wall Mount * Requires Decorative Arm	**BZ** Bronze **BK** Black **SBK** Smooth Black **WH** White **SWH** Smooth White **GP** Graphite **GY** Grey **SL** Silver Metallic **CC** Custom Color	**C1** **C3** **H1** **H2** **H3** *Input selection from this column in the form of C1-H1	**PC-120** Button Type Photocell **PC-208** Button Type Photocell **PC-240** Button Type Photocell **PC-277** Button Type Photocell **WSC-8** Motion Sensor 8' Mounting Height **WSC-20** Motion Sensor 9-20' Mounting Height **WSC-40** Motion Sensor 21-40' Mounting Height This option will require (1) FSIR 100 remote for programing **DIM** 0-10v Dimming Driver **VWC** Visionaire Wireless Controls *Consult Factory **IR-R** Illuminated Rings Red **IR-B** Illuminated Rings Blue **IR-G** Illuminated Rings Green **CLS** Cutoff Louver Shield

Housing
• The driver housing and reflector shade are constructed from two-piece, heavy-gauge, spun aluminum with a rolled edge for added strength. Choose straight, curved-out or curved-in shades.
• All external hardware is stainless steel.
• Decorative rings are ” cast aluminum.

Door Assembly
• A cast aluminum tool-less door allows easy access into housing and is fully gasketed with a form-fitting one-piece premium extruded silicone gasket to provide complete weather and insect protection.

Optical System
• The highest lumen output LEDs are utilized. Estimated life of the LEDs is a minimum of 100,000 hours. IES distribution types I, II, III, IV, V and V-W are standard. Available with up to 96 LEDs. The optical system qualifies as IES full cutoff to restrict light trespass, glare and light pollution for neighborhood-friendly lighting.
• CRI values are 70.

Quali-Guard® Finish
• Aluminum fixture components are chemically pretreated through a multiple-stage washer and finished with an electrostatically-applied, thermoset polyester powder coat textured paint with a minimum of 3 to 5 mils thickness. Finish is oven-baked at a temperature of 400 ºF to promote maximum adherence and finish hardness. All finishes are available in standard and custom colors.

Mounting
• Pavilion II mounts to a wide selection of decorative and custom mounting arms for both pole and wall mount applications (see Decorative Arms section of catalog).

Electrical Assembly
• The Pavilion II is supplied with a high-performance LED driver, located in its cap, that accepts 120 V through 277 V, 50 Hz to 60 Hz input. Power factor is 90%. Rated for -40 oF operation.
• 10 kV surge protector supplied as standard.

Warranty
• Five (5) year Limited Warranty on entire system, including finish. For full warranty information, please visit VisionaireLighting.com.

Options
• Button type photocell
• Cutoff louver system
• High-low system
• 0-10 V dimming driver

Listings
• Pavilion II is cUL listed, suitable for wet locations.
• LM79.
• LM80.
• Powder Coated ToughTM .
• RoHS compliant.

POWDER COATED TOUGH™

c UL us LISTED

PAVILION II LED Specifications

Photometric Optical Summary

Not all optics are available on all fixtures. Check ordering chart for availability

Type I (T1) | Type II (T2) | Type III (T3) | Type IV (T4) | Type V (T5) | Type VW (T5W)

EPA Data	Fixture Only	Fixture with VA103-S1	2 Fixtures with VA103-D2	Fixture with VA100-S1	2 Fixtures with VA100-D2
	2.8	4.4	8.0	3.7	6.9

Dimensions

Size 1

Width:	PD-L 26”
Height:	PD-L 18” 12'
Shade Height:	PD-L 8”
Weight:	30 LBS

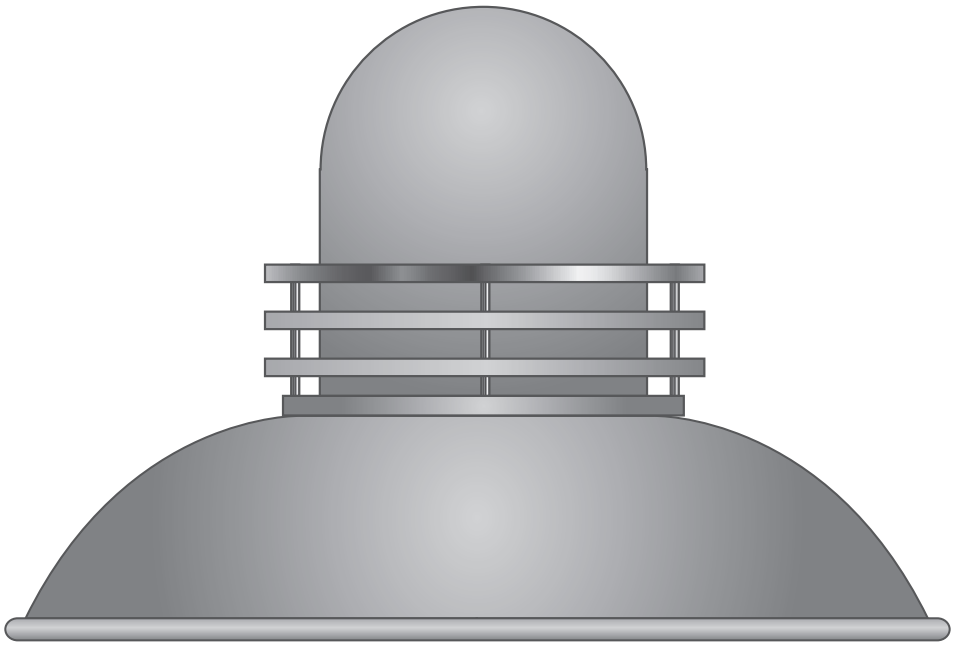

CAP 1 (C1) | CAP 3 (C3) | HOUSING 1 (H1) | HOUSING 2 (H2) | HOUSING 3 (H3)

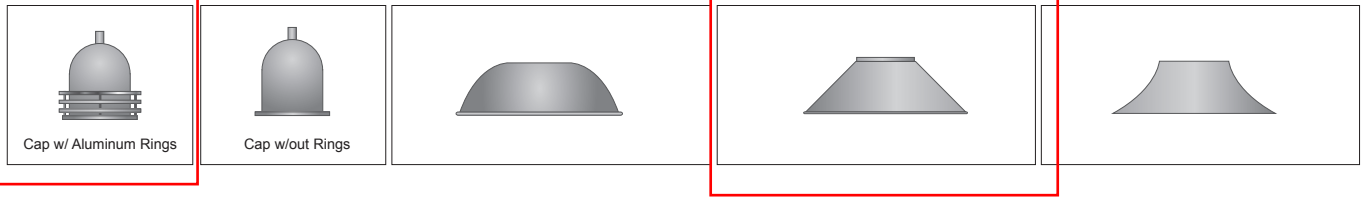

VISIONAIRE LIGHTING

5K Lumen Data *Lumen chart updated 02.23.16									
32	350	4379	4030	3996	3927	4287	4382	4121	36
	530	6167	5676	5627	5531	6037	6171	5804	55
48	350	6267	5768	5719	5621	6135	6271	5898	52
	530	8847	8144	8074	7936	8662	8853	8327	78
64	350	7953	7321	7258	7134	7786	7959	7486	71
	530	11257	10362	10273	10097	11021	11265	10595	106
80	350	9822	9040	8963	8809	9615	9828	9244	86
	530	13994	12880	12770	12551	13700	14003	13171	130
96	350	11641	10715	10623	10441	11397	11649	10957	101
	530	16698	15370	15238	14977	16348	16709	15716	152

Visit www.VisionaireLighting.com for up-to-the-minute chart information, including types not listed here.
* For 4000K multiply values by 0.95 - For 3000K multiply values by 0.90

VA107 MOUNTING ARM

Typical Decorative Arms - (Additional Arms in Mounting Arm Section)

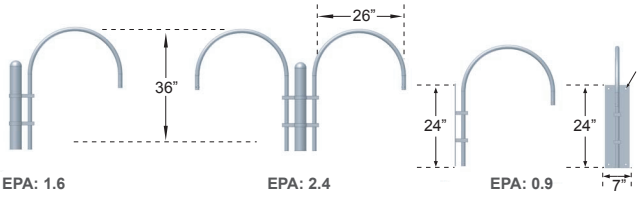

EPA: 1.6
VA103-S1

EPA: 2.4
VA103-D2

EPA: 0.9
VA103-WM

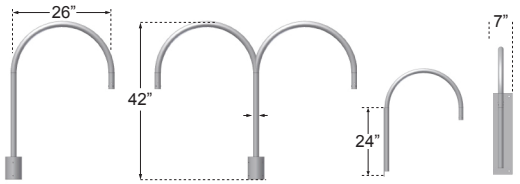

EPA: 0.9
VA100-S1

EPA: 1.3
VA100-D2

EPA: 0.8
VA100-WM

Cap and Shade Combinations

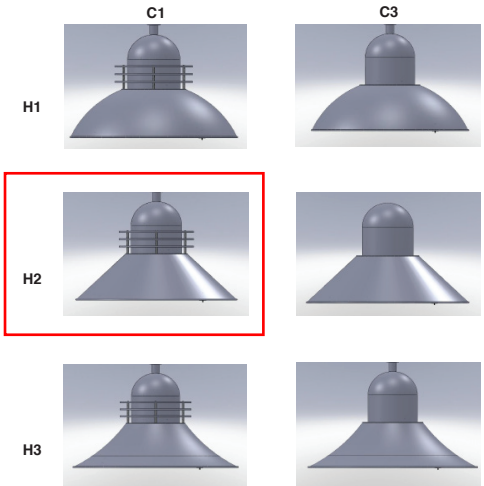

Mounting Detail

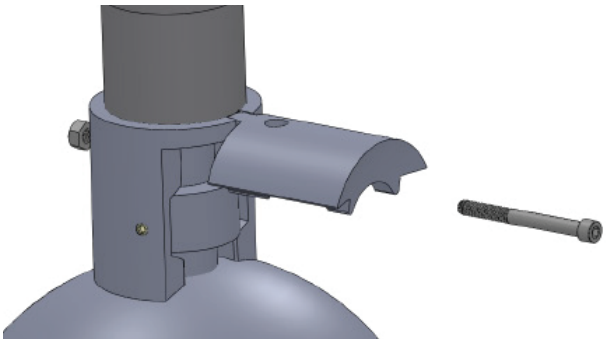

19645 Rancho Way • Rancho Dominguez, CA 900220 • Phone: 310 512 6480 Fax 310 512 6486
www.visionairelighting.com

VA107

Mounting Arms

VA107 is constructed of 2" x 4" (small) or 3" x 5" (large) rectangular extruded aluminum tubing with ⅜"-thick angled flat bar. The center slip fitter can be made to slip over the following tenon (or pole) sizes: 3" Ø, 3½" Ø, 4" Ø and 4½" Ø and 5" Ø. **VA107** is available in the following pole mounting configurations: Single and Double 180°. Please consult factory for custom mounting.

Fixture	A	B	C	D	E	EPA S1	EPA D2	EPA WM
VA107-L	24"	36"	7"	36"	2.3	3.1	1.1	1.2
VA107-S	18"	30"	7"	30"	1.5	2.1	.7	.8
VA107 S1				VA107 D2				

Project Name:

PIPERS MEADOW

Catalog Number:

Type:

Model	Mounting	Pole or Tenon Size	Finish
VA107-L VA107-S	Single **(S1)** Double **(D2)** Wall Mount **(WM)**	3" dia. **(3)** 3½" dia. **(3½)** 4" dia. **(4)** 4½" dia. **(4½)** 5" dia. **(5)**	Bronze **(BZ)** Black **(BK)** White **(WH)** Sandstone **(SN)** Weathered Brown **(WB)** Silver Metallic **(SL)** Verdigris **(VG)** Forest Green **(FG)** Custom Color **(CC)**

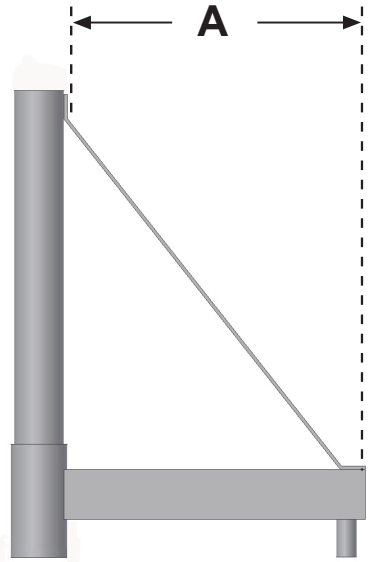

S1

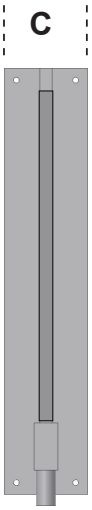

WM

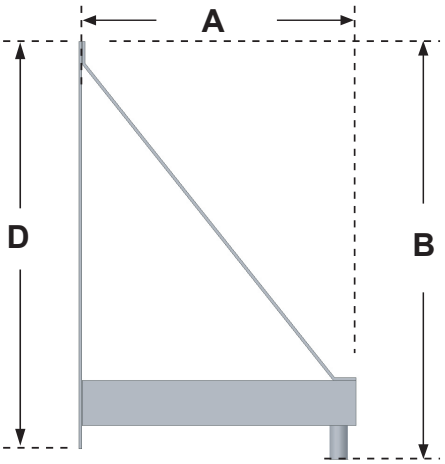

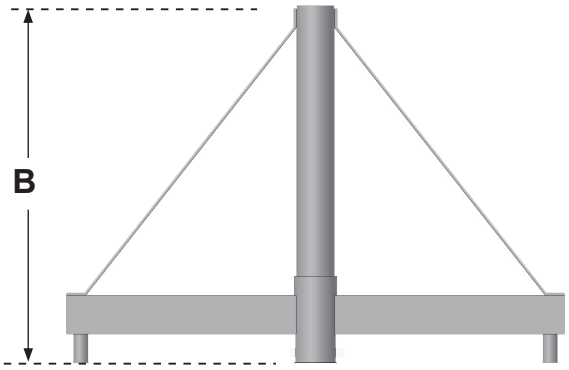

D2

19645 Rancho Way • Rancho Dominguez, CA 900220 • Phone: 310 512 6480 Fax 310 512 6486
www.visionairelighting.com

RNTS

Project Name:	Catalog Number:	Type

Hand Hole

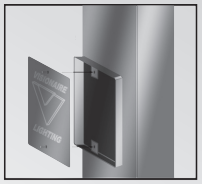

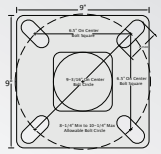

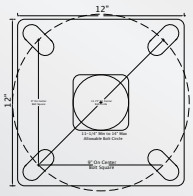

Specifications

Round Non Tapered Steel Pole

Pole Shaft
• ASTM A500 Grade B tubing with minimum yield strength of 46,000 PSI. Shaft is furnished with ground lug inside pole, opposite hand hole opening. Center line of hand hole is 12" from base plate.

Base Plate
• Steel Plate base is ASTM-A36 hot rolled steel, meets or exceeds minimum yield strength of 36,000 PSI.
• Base templates provided with order. Do not pre-pour.

Base Cover
• Die-formed from heavy gauge quality aluminum. Two piece cover for easy installation.
• Consult factory for DCB bolt circle info.

Pole Cap
• Color-impregnated polymer snap-to-close pole cap provided in black.

Finish
• All poles are shot-blasted and cleaned to a near-white finish prior to painting. A Quali-Guard® textured thermoset polyester powder coat is then applied to a minimum of 3 millimeters and then oven-baked at a temperature of 400 ºF to promote exceptional adherence and finish hardness. Pole finish is warranted for a full two (2) years. An optional five (5) year extended warranty is also available (prime coat and rust inhibiting internal coating).

Anchor Bolts
• Poles are provided with hot-dip galvanized anchor bolts, with a "J" bend on one end and two flat hex bolts end and two flat washers per bolt. Anchor bolts meet or exceed a minimum of 36,000 PSI. Anchor bolts conform to ASTM F1554 grade 36 and are provided.

Model	Shaft Size	Gauge	Height	Base	Anchorage	Mounting	Finish	Options
RNTS	4" Ø **(4R)**	11 **(11)** 7 **(7)**	10' 12' 14' 16' 18' 20' 22' 25' 28'	9" Base *9-3/16" BC **(9BC)** 12" Base *12¾" BC **(12BC)**	¾" × 30" **(343)** 1" × 36" **(136)**	Bolt-On Arm Single **(S1)** D180 **(D2)** D90 **(D9)** T90 **(T9)** T120 **(T1)** Quad **(QD)** Tenon Options 2⅜" **(T238R)** 3" **(T3R)** 3½" **(T3.5R)** 4" **(T4R)** 4½" **(T4.5R)**	Bronze **(BZ)** Black **(BK)** White **(WH)** Tennis Green **(GN)** Forest Green **(FG)** Grey **(GY)** Silver Metallic **(SL)** Custom Color **(CC)** Galvanized *No paint **(GAL)**	GFI Receptacle *Standard location is in hand hole **(GFI)** Custom Bolt Circle *Consult factory **(CBC)** Round Base Cover **(RBC)** Rust-Inhibiting Internal Coating & Primer **(HCR)**
	5" Ø **(5R)**	11 **(11)** 7 **(7)**	20' 22' 25' 28' 30'	12" Base *12¾" BC **(12BC)**	1" × 36" **(136)**			
	6" Ø **(6R)**	7 **(7)**	28' 30' 35'	12" Base *12¾" BC **(12BC)** Custom Base *Consult factory **(CB)** Direct Burial *Specify below-grade length in the form of DB-xx, where "xx" = feet. **(DB-___)** NOTE: CUP and/or HHC Options required.	1" × 36" **(136)**			Direct Burial Coupling *Specify Size and Location as CUP_S-xx_L-yy, "xx" = ½" or ¾" "yy" = feet from bottom of pole **(CUP_S-__L-__)** Hand Hole *Specify cover and location as HHC_C-xx_L-yy, "xx" = Y for yes, or N for no "yy" = feet from bottom of pole **(HHC_C-__L-__)**

For more detailed information on mounting, wiring or installation instructions, please consult factory. If poles are not ordered with fixtures, please specify mounting requirements. This document contains proprietary information of Visionaire Lighting LLC. Any use of this information requires the written approval of Visionaire Lighting, LLC. In keeping with our TQM policy of continuous improvement, Visionaire reserves the right to change any specifications contained herein without prior notice.

Pole EPA for Round Non-Tapered Steel Poles

Pole Height	Maximum Allowable EPA (ft²) with 1.3 gust factor							O.D.	Pole Gauge	Base Plate	Bolt Circle	Anchor Bolts
	80 mph	90 mph	100 mph	110 mph	120 mph	130 mph	140 mph					
10'	17.5	13.4	10.7	8.6	7.0	5.9	4.7	4"	11	9"sq × ¾"	9- 3/16"	¾" × 30"
12'	14.0	10.7	8.3	6.7	5.3	4.5	3.4	4"	11	9"sq × ¾"	9- 3/16"	¾" × 30"
14'	11.5	8.7	6.7	5.2	4.0	3.4	2.4	4"	11	9"sq × ¾"	9- 3/16"	¾" × 30"
16'	9.0	6.6	5.0	3.7	2.8	2.4	1.5	4"	11	9"sq × ¾"	9- 3/16"	¾" × 30"
18'	7.3	5.2	3.8	2.7	1.8	1.5	-	4"	11	9"sq × ¾"	9- 3/16"	¾" × 30"
20'	6.1	4.2	2.9	1.9	1.2	1.0	-	4"	11	9"sq × ¾"	9- 3/16"	¾" × 30"
20'	9.9	7.2	5.3	3.9	2.8	2.4	1.6	4"	7	9"sq × ¾"	9- 3/16"	¾" × 30"
20'	10.6	7.5	5.5	3.9	2.7	2.3	1.1	5"	11	12"sq × 1"	12-3/4"	1" × 36"
20'	16.8	13.2	9.5	7.2	5.5	4.6	3.1	5"	7	12"sq × 1"	12-3/4"	1" × 36"
22'	4.6	3.0	1.8	1.0	-	-	-	4"	11	12"sq × 1"	12-3/4"	1" × 36"
22'	7.9	5.6	4.0	2.7	1.8	1.5	-	4"	7	12"sq × 1"	12-3/4"	1" × 36"
22'	8.2	5.7	3.9	2.5	1.5	1.3	-	5"	11	12"sq × 1"	12-3/4"	1" × 36"
22'	13.6	9.9	7.4	5.4	3.9	3.3	1.8	5"	7	12"sq × 1"	12-3/4"	1" × 36"
25'	3.2	1.8	-	-	-	-	-	4"	11	12"sq × 1"	12-3/4"	1" × 36"
25'	6.2	4.1	2.7	1.7	-	-	-	4"	7	12"sq × 1"	12-3/4"	1" × 36"
25'	6.3	4.0	2.5	1.2	-	-	-	5"	11	12"sq × 1"	12-3/4"	1" × 36"
25'	11.0	7.7	5.5	3.7	2.5	2.1	-	5"	7	12"sq × 1"	12-3/4"	1" × 36"
28'	4.4	2.4	1.1	-	-	-	-	4"	7	12"sq × 1"	12-3/4"	1" × 36"
28'	4.3	2.3	1.0	-	-	-	-	5"	11	12"sq × 1"	12-3/4"	1" × 36"
28'	8.4	5.6	3.6	2.2	1.0	0.9	-	5"	7	12"sq × 1"	12-3/4"	1" × 36"
28'	7.6	4.7	2.7	1.2	-	-	-	6"	11	12"sq × 1"	12-3/4"	1" × 36"
28'	13.7	9.6	6.6	4.5	2.8	2.4	-	6"	7	12"sq × 1"	12-3/4"	1" × 36"
30'	3.3	1.5	-	-	-	-	-	5"	11	12"sq × 1"	12-3/4"	1" × 36"
30'	7.2	4.6	2.8	1.3	-	-	-	5"	7	12"sq × 1"	12-3/4"	1" × 36"
30'	6.3	3.7	1.7	-	-	-	-	6"	11	12"sq × 1"	12-3/4"	1" × 36"
30'	12.0	8.2	5.5	3.3	1.8	1.5	-	6"	7	12"sq × 1"	12-3/4"	1" × 36"
35'	4.2	2.1	-	-	-	-	-	5"	7	12"sq × 1"	12-3/4"	1" × 36"
35'	7.8	4.7	2.4	-	-	-	-	6"	7	12"sq × 1"	12-3/4"	1" × 36"

For Direct Burial EPA, consult factory

• CAUTION: If any additional stress such as flags, banners, streamers, ropes, or any other such items are added to poles, Visionaire Lighting's normal product guarantee is null and void. Additionally, adding such items to any pole may create severely hazardous conditions. Poles are calculated to withstand steady wind velocities of between 70 and 100 mph wind zones with a 1.3 gust factor depending on height, wall thickness, and width/ diameter. For an exact rating on a specific order, contact Visionaire directly.

2 × 4 BOA Drill Pattern

*Radiused Pole Plate (RPP) Adaptor required for mounting for round poles.

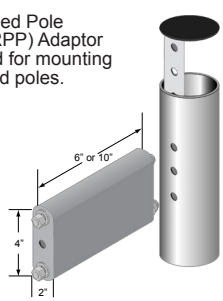

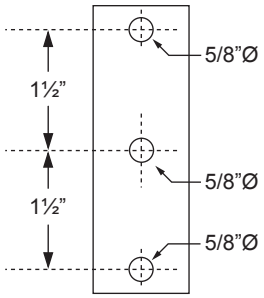

2 × 6 BOA Drill Pattern

*Radiused Pole Plate (RPP) Adaptor required for mounting for round poles.

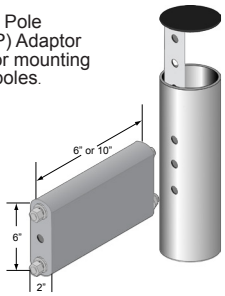

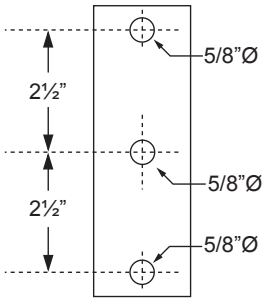

19645 Rancho Way Rancho Dominguez, CA 90220
Tel: (310) 512-6480 Fax: (310) 512-6486
www.visionairelighting.com

DCB-20

Project Name:	Catalog Number:	Type

Model	Shaft Diameter	Finish
DCB-20	4” O.D. Smooth **(4RS)** 5” O.D. Smooth **(5RS)** Fluted aluminum, smooth aluminum or smooth steel poles only. See pole specification sheet for details.	Bronze **(BZ)** Black **(BK)** White **(WH)** Forest Green **(FG)** Grey **(GY)** Silver Metallic **(SL)** Custom Color **(CC)**

Base
• Two piece decorative fluted cast aluminum pole base.

Finish
• All bases are shot-blasted and cleaned to a near-white finish prior to painting. A Quali-Guard® textured thermoset polyester powder coat is then applied to a minimum of 3 millimeters and then oven-baked at a temperature of 400 °F to promote exceptional adherence and finish hardness. Finish is warranted for a full two (2) years. An optional five (5) year extended warranty is also available.

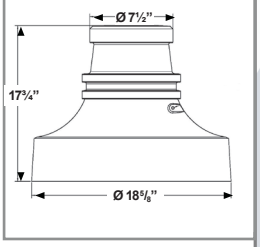

DCB-21

Model	Shaft Diameter	Finish
DCB-21	For round tapered poles only. For pole base diameters ranging from 8.25” - 9.25”. Consult factory for details.	Bronze **(BZ)** Black **(BK)** White **(WH)** Forest Green **(FG)** Grey **(GY)** Silver Metallic **(SL)** Custom Color **(CC)**

Base
• Two piece decorative fluted cast aluminum pole base.

Finish
• All bases are shot-blasted and cleaned to a near-white finish prior to painting. A Quali-Guard® textured thermoset polyester powder coat is then applied to a minimum of 3 millimeters and then oven-baked at a temperature of 400 °F to promote exceptional adherence and finish hardness. Base finish is warranted for a full two (2) years. An optional five (5) year extended warranty is also available.

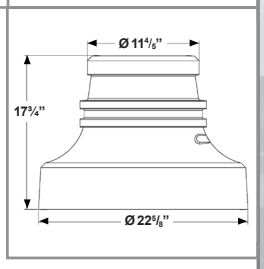

For more detailed information on mounting, wiring or installation instructions, please consult factory. If poles are not ordered with fixtures, please specify mounting requirements. This document contains proprietary information of Visionaire Lighting LLC. Any use of this information requires the written approval of Visionaire Lighting, LLC. In keeping with our TQM policy of continuous improvement, Visionaire reserves the right to change any specifications contained herein without prior notice.

Enchanted Forest

(20-109421)

544 Chestnut Street, , Chattanooga, TN 37402
(800) 727-1907

Front View

Product Information

The Enchanted Forest playground lends a truly natural look to a recreation space with the playful slat roof, rope ladder, and pinnacle climber at the ideal height for children ages 2-5 years.

- Freight, sales tax, surfacing and installation costs not included

Play System	Color Palette	Age	Space Required
SUPERmax PLAY SYSTEMS 5" Diameter Uprights | 48" Decks	**Northwoods**	**2-5**	**30' 6" x 24' 6"**

Capacity	Critical Fall Height	Weight	Price
15-25	**4' 0"**	**1808 lbs**	**$24,606.00** *Prices shown in U.S. Dollar and may vary based upon configurations. Pricing does not include freight, sales tax, surfacing or installation costs. Please contact your local Recreation Consultant for more information.

Featured Components

Pinnacle Climber

Single Attach Single

Entry

Rope Ladder

Bug Panel

Back View

Play & Park Structures of Southern Texas

Jeff Mankins

jmankins@playandpark.com

play&park structures
A PLAYCORE Company

Secret Egret
(30-104168)

544 Chestnut Street, , Chattanooga, TN 37402
(800) 727-1907

Front View

Product Information

Play System	Color Palette	Age	Space Required
Boulder SCAPES	**Custom**	**5-12**	**30' 9" x 43' 6"**

3-1/2" Uprights | Deckless, Rocks, Ropes and Nets

Capacity	Critical Fall Height	Weight	Price
15-20	**8' 0"**	**2461 lbs**	**$34,214.00**

*Prices shown in U.S. Dollar and may vary based upon configurations. Pricing does not include freight, sales tax, surfacing or installation costs. Please contact your local Recreation Consultant for more information.

Featured Components

Beanstalk Climber

Double Velocity Slide

Tri-Cable Climber

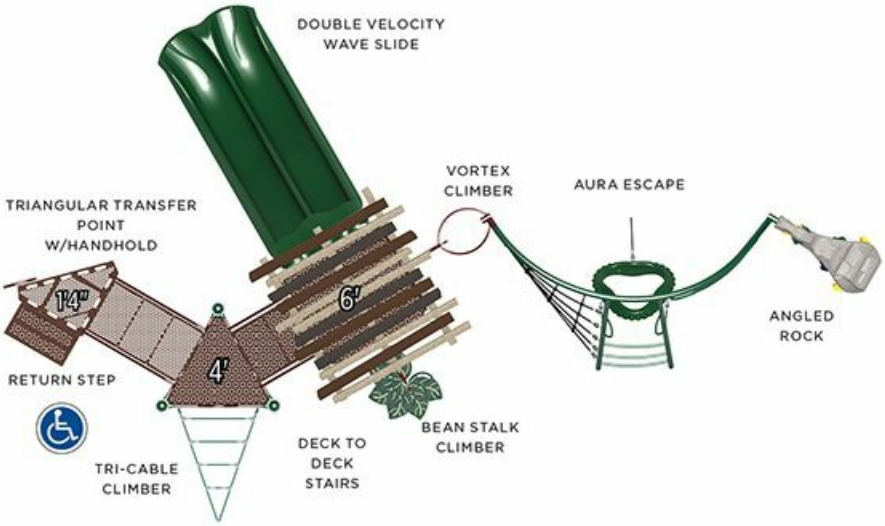

Back View

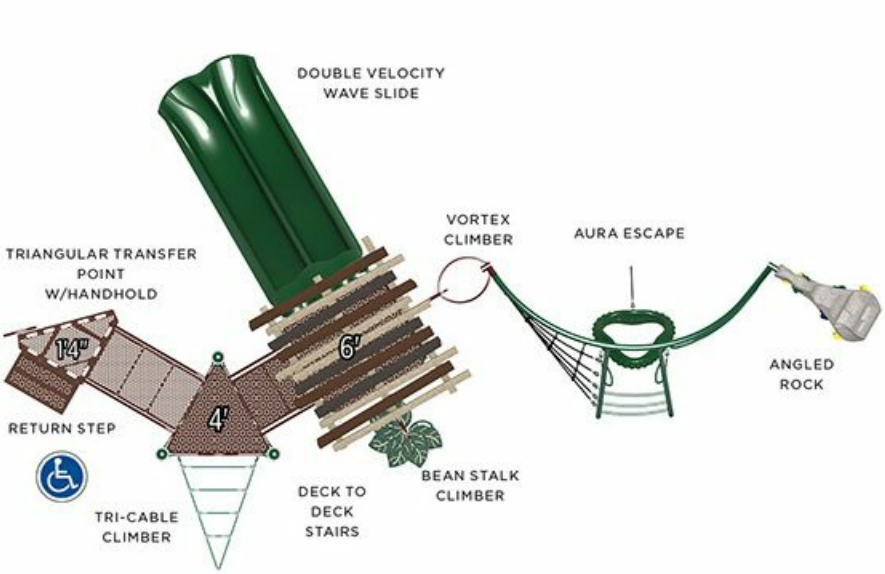

Top View

play & park structures® warranties

Limited Lifetime Warranty

Limited lifetime warranty on all Play & Park Structures posts, clamps, post caps, and hardware.

15 Year Limited Warranty

15-Year limited warranty on SuperMax, DuraMax, totmax, Skyline, Early Horizons, rotomolded plastic components, decks, pipes, rails, loops, and rungs.

10 Year Limited Warranty

10-Year limited warranty on shade products, fiberglass signage, pressure treated pine, and redwood products utilized in site furnishings.

5 Year Limited Warranty

5-Year limited warranty on , HDPE panels, swing strap seats, tot seats, and nylon-covered cable net climbers and components.

3 Year Limited Warranty

3-Year limited warranty on spring bouncer C-type springs.

1 Year Limited Warranty

1-Year limited warranty on spring bouncer coil springs and all other Play & Park Structures products including moving parts.

Terms & Conditions

TO THE EXTENT PERMITTED BY LAW, THESE WARRANTIES ARE EXPRESSLY IN LIEU OF ANY OTHER IMPLIED OR EXPRESSED WARRANTIES OR REPRESENTATIONS BY ANY PERSON, INCLUDING AN IMPLIED WARRANTY OF MERCHANTABILITY OR FITNESS. Warranties do not cover damage caused by vandalism or abuse. Warranty claims must be filed within the applicable warranty period and accompanied by a copy of the original invoice or Play & Park Structures invoice number.

Play & Park Policies

Specifications: Specifications were current at the time of publication. Play & Park Structures has an ongoing policy of product improvement and therefore reserves the right to modify specifications or discontinue products without notice.

Terms of Sale: To governmental agencies and tax supported institutions, and those with approved credit, payment is due within 30 days from the date of invoice. A 1.5% per month finance charge will be imposed on all past due accounts. We also accept payment by VISA, MasterCard or American Express. All other orders will require a 50% deposit at the time of order entry. The balance will be due with a certified check upon receipt of shipment (C.O.D.).

Prices: Prices are F.O.B. factory and do not include freight charges. All prices listed were current at the time of publication and quoted in U.S. Funds. Due to the abnormally high cost of fuel and its impact on many of the materials used in our industry, quotations are valid for 30 days only and prices may be subject to material and fuel surcharges at the time of shipment. Prices are subject to change without notice. Current prices will apply at the time of shipment.

Freight charges: Freight charges are determined and collected by the carrier unless Play & Park Structures is requested and agrees to prepay and add these costs to the invoice.

Taxes: If applicable, taxes will be added to the invoice except when a tax-exempt certificate is provided with the purchase order at the time of order entry.

Minimum Order: Our minimum order is US $50.00.

Order Cancellation: Once accepted, orders can be canceled only with the consent of Play & Park Structures, and on terms which will indemnify Play & Park Structures against loss. Canceled orders will be subject to a restocking fee. Equipment "built-to-order" is non-cancelable.

Domestic Shipments: Unless specifically given routing instructions on the purchase order, shipment will be made via the carrier we consider to be the most economical and practical in reaching the final destination. All domestic shipments are governed by ICC Regulations.

Delays in Transit: Play & Park Structures is not responsible for delays in transit and such delays shall not alter our invoicing terms. If your order does not reach you within a reasonable time after being advised that shipment went forward from our plant, Play & Park Structures will assist in the tracking process.

Loss or Damage in Transit: Play & Park Structures is not responsible for loss or damage in transit. When we release the material to the carrier, a bill of lading is signed which states that the shipment was received from us complete and in good condition. A copy of this bill of lading is forwarded to you with the shipment and should be checked carefully with the materials you received. Any shortage, discrepancy or damage must be noted on the delivery receipt and signed by the carriers' representative. Failure to note acceptations on the delivery receipt may impair your right to recovery from the carrier.

Weights: All published weights are estimated and include appropriate packing materials. Actual weights may vary slightly.

Pricing valid on orders received prior to November 30, 2019: orders must be shipped within 30 days.

*For the purpose of this warranty, lifetime encompasses no specific term of years, but rather that Seller warrants to its original customer for as long as the original customer owns the Product and uses the Product for its intended purpose that the Product and all parts will be free from defects in material and manufacturing workmanship.

PARTNERSHIP STANDARDS & ORGANIZATIONS

CPSC

The Consumer Product Safety Commission is an independent agency within the United States Federal Government with the authority to inform the public of current product safety performance information and recommended practices. The CPSC first published their guidelines for public playgrounds in 1981 and have updated their publication several times since then. The current CPSC Handbook for Public Playground Safety, publication #325, is an excellent guide for owners and operators of public play environments.

U.S. Consumer Product Safety Commission
Washington, DC 20207
Website: www.cpsc.gov
E-mail: info@cpsc.gov

Flo-Coat® Galvanized Steel Tubing

Galvanizing provides electrochemical protection to steel, in addition to forming a protective barrier. Allied's unique triple layer Flo-Coat galvanizing process goes even a step further by adding a conversion coating to passivate the zinc, and a clear polymer topcoat that reduces the general corrosion rate of the zinc. This synergy between the coatings allows the zinc to be more effective in protecting uncoated edges.

ISO 14001

We are proud to be ISO14001 certified for our manufacturing facility in Fort Payne, Alabama. Also referred to as the "Green Certification," ISO14001 is an internationally recognized standard for environmental management, measurement, evaluation and auditing. As an ISO14001 certified company, Play & Park controls the environmental impact of our activities, products, and services by implementing and Environmental Management System (EMS) that meets international standards, but is specific to the play products being produced.

ISO 9001

An industry certification process issued by the International Organization for Standardization. It is used to measure manufacturing standards and to certify company compliance with quality control systems covering design, development, production, installation, inspection and testing.

DOJ 2010 Standard for Accessible Design

Access Board (The United States Architectural and Transportation Barriers Compliance Board) has completed Accessibility Guidelines for Play Facilities as set forth in the Americans with Disabilities Act of 1990. The Final rules, fact sheets and analysis are all available at the Department of Justice.

Access Board
1331 F Street, NW, Washington, DC 20004-1111

Website: www.access-board.gov
E-mail: ta@access-board.gov

US Department of Justice:
www.ada.gov

ASTM International

is an independent and world renowned developer of technical standards utilized in testing a multitude of products. ASTM's F15.29 committee met regularly for over a decade in the continual development of the F1487 Standard Consumer Safety Performance Specifications for Playground Equipment for Public Use. Throughout this catalog we state ASTM Use Zones in dimensional form per the ASTM F1487 Standard Consumer Safety Performance Specifications for Playground Equipment for Public Use, which are minimum dimensions. Consideration should be given to the number of users and their circulation patterns.

ASTM International

100 Barr Harbor Drive, PO Box C700

West Conshohocken, PA 19428-2959

Website: www.astm.org
E-mail: service@astm.org

IPEMA

In the interest of public playground safety, the International Playground Equipment Manufacturer's Association (IPEMA) provides a Third Party Certification Service whereby a designated independent laboratory, TUV America, Inc., validates an equipment manufacturer's certification of conformance to ASTM F1487, Standard Consumer Safety Performance Specification for Playground Equipment for Public Use, except sections 7.1.1, 10 & 12.6.1; to CAN/CSA Z614, Children's Playspaces and Equipment, except clauses 9.8, 10 & 11, or both. The use of corresponding logo in Play & Park Structures' catalog signifies that Play & Park Structures has received written validation from the independent laboratory that the product(s) associated with the use of the logo conforms to the requirements of the indicated standard. Check the IPEMA website, www.ipema.org, to confirm product validation.

IPEMA

4305 N. 6th Street, Suite A, Harrisburg, PA 17110

Website: www.ipema.org
E-mail: certification@ipema.org

CSA

A large portion of Play & Park Structures equipment meets CSA standards, but please request structures, components, or freestanding items that specifically meet that need if required.

Services

Flexible Financing Program

Through a strategic alliance with Navitas Corporation®, Play & Park is able to provide flexible financing for customers who require funding assistance on their next playground project. Complete our financing request form online at playandpark.com, and bring play opportunities to your school or community more quickly.

National Demonstration Site

Learn more about becoming a national demonstration site for inclusive playgrounds, fitness focused play, a NatureGrounds® play space, or for physically active play.
To learn more visit: playandpark.com/national-demonstration-site-program

play&park structures®
A PLAYCORE Company

544 Chestnut Street,
Chattanooga, TN 37402