HISTORIC AND DESIGN REVIEW COMMISSION

June 05, 2019

HDRC CASE NO:	**2019-297**
ADDRESS:	3020 BROADWAY, 108 & 110 IRA
LEGAL DESCRIPTION:	NCB 3866 BLK 12 LOT NW 100 FT OF 5&6
ZONING:	C-2, RIO-1
CITY COUNCIL DIST.:	2
APPLICANT:	Brandon Moffett
OWNER:	Skyler Cozby, BACI Partners, LTD
TYPE OF WORK:	Construction of an addition, parking lot modifications
APPLICATION RECEIVED:	May 15, 2019
60-DAY REVIEW:	July 19, 2019
CASE MANAGER:	Edward Hall

REQUEST:

The applicant is requesting a Certificate of Appropriateness for approval to construct an addition to the existing building and expand the existing parking lot to the east to the vacant lot at 108 and 110 Ira.

APPLICABLE CITATIONS:

UDC Section 35-672. – Neighborhood Wide Design Standards

(a) Pedestrian Circulation. Pedestrian access shall be provided among properties to integrate neighborhoods.

(1) Provide sidewalks that link with existing sidewalks on adjoining properties If no sidewalk currently exists on an adjoining property, the applicant will have discretion in the placement of the sidewalk provided the following criteria are met:

A. Provide a sidewalk connection from one (1) side of the applicant's property to the other, parallel to the public right-of way, on the street sides of the property in all river improvement overlay districts

B. Provide a connection from the street level sidewalk to the Riverwalk at cross streets and bridges and other designated access points. This requirement may be waived if there is already a public connection from the street level to the Riverwalk.

C. In order to preserve the rural character of "RIO-6," the HPO, in coordination with the development services department, may waive the requirement of sidewalks.

- In "RIO-3," the width of the pathway along the river shall match those widths established in the historic Hugman drawings. If there are no sidewalks in the Hugman drawings, the path will not exceed eight (8) feet in width.

(2) Link the various functions and spaces on a site with sidewalks in a coordinated system.

Provide pedestrian sidewalks between buildings, parking areas and built features such as outdoor plazas and courtyards.

(3) Paving materials. Paving materials for pedestrian pathways shall use visually and texturally different materials than those used for parking spaces and automobile traffic.

A. Paving materials for pedestrian pathways shall be either:

i. Broom-finished, scored, sandblasted or dyed concrete;

ii. Rough or honed finished stone;

iii. Brick or concrete pavers; or

iv. Other materials that meet the performance standards of the above materials.

B. Asphalt is permitted for pedestrian pathways that also are designated as multi-use paths by the City of San Antonio. The public works department will maintain the designated multi-use path locations.

(4) Street Connections to River. Retain the interesting and unique situations where streets dead-end at the river, creating both visual and physical access to the river for the public.

(5) Pedestrian Access Along the Riverwalk Pathway Shall Not Be Blocked.

A. Queuing is prohibited on the Riverwalk pathway.

B. Hostess stations shall be located away from the Riverwalk pathway so as to not inhibit pedestrian flow on the

Riverwalk pathway. That is, the hostess station shall not be located in such a manner to cause a patron who has stopped at the hostess stand to be standing on the Riverwalk pathway. Pedestrian flow shall be considered "inhibited" if a pedestrian walking along the pathway has to swerve, dodge, change direction or come to a complete stop to avoid a patron engaged at the hostess stand.

C. Tables and chairs shall be located a sufficient distance from the Riverwalk pathway so that normal dining and service shall not inhibit the flow of pedestrian traffic. See inhibited definition in subsection B. above.

(b) Automobile Access and Parking. Automobile circulation should be efficient, and conflicts with pedestrians minimized. Entry points for automobiles should be clearly defined and connections to auto circulation on adjoining properties are encouraged to facilitate access and reduce traffic on abutting public streets.

(1) Curb Cuts.

A. Limit curb cuts to two (2) on parking areas or structures facing only one (1) street, and one (1) for each additional street face. The prohibition of additional curb cuts may be waived by the HDRC where the intent of the standards are clearly met and specific site circulation patterns require an additional curb cut, such as on long parcels or at nodes.

B. Curb cuts may be no larger than twenty-five (25) feet zero (0) inches. Continuous curb cuts are prohibited.

C. Sharing curb cuts between adjacent properties, such as providing cross property access easements, is permitted.

(2) Location of Parking Areas. Automobile parking in new developments must be balanced with the requirements of active environments. Large expanses of surface parking lots have a negative impact on street activity and the pedestrian experience. New commercial and residential structures can accommodate parking needs and contribute to a pedestrian-friendly streetscape.

A. Locate parking areas, that is any off-street, ground level surface used to park cars or any parking structure, toward the interior of the site or to the side or rear of a building.

B. The extent of parking area that may be located along the street edge or riverside shall be limited to a percentage of the lot line as per Table 672-1 as measured in a lineal direction parallel to the lot line. All parking within a thirty-foot setback from the above mentioned lot line shall comply with the requirements of the table. Where parking is located on corner sites only one (1) lot line has to meet the requirements of the table.

C. Parking lots should be avoided as a primary land use. Parking lots as a primary use are prohibited in RIO-3 and for all properties that fall within one hundred (100) feet of the river right-of-way in all RIO districts.

(3) Screen or Buffer Parking Areas From View of Public Streets, the River or Adjacent Residential Uses. (see Figure 672-2). Parking lots shall be screened with a landscape buffer as per the illustrations of bufferyards and Table 510-2 if the parking area meets one (1) of the following conditions:

A. Within a fifty-foot setback from the edge of the river ROW use, at a minimum, type E; or

B. Within a twenty-foot setback from a property line adjacent to a street use, at a minimum, type B; or

C. Within a twenty-foot setback of commercial or industrial property that abuts a residential property use, at a minimum, type C.

(4) Parking Structures Shall Be Compatible With Buildings in the Surrounding Area. Parking garages should have retail space on the ground floor of a parking structure provided the retail space has at least fifty (50) percent of its linear street frontage as display windows. Parking structures may be made visually appealing with a mural or public art component approved by the HDRC on the parking structure. A parking garage will be considered compatible if:

A. It does not vary in height by more than thirty (30) percent from another building on the same block face; and

B. It uses materials that can be found on other buildings within the block face, or in the block face across the street.

(5) Parking Structures Shall Provide Clearly Defined Pedestrian Access. Pedestrian entrances and exits shall be accentuated with directional signage, lighting or architectural features so that pedestrians can readily discern the appropriate path of travel to avoid pedestrian/auto conflicts.

(6) Parking lots, structures, and hardscape shall not drain directly into the river without installation of appropriate water quality best management practices (WQ BMPs). Acequias shall not be used for any type of drainage.

(c) Views. The river's course (both natural and manmade), and San Antonio's street pattern, creates unique views of certain properties from the public ROW. These properties often occur at prominent curves in the river or where a street changes direction and a property appears to be a terminus at the end of a street.

(1) Architectural Focal Point. When a property is situated in such a manner as to appear to be the terminus at the end of the street or at a prominent curve in the river, the building shall incorporate into its design an architectural feature that will provide a focal point at the end of the view. (see Figure 672-3) An architectural feature will be

considered to be a focal point through any of the following methods, but not limited to:

A. Additional height.

B. Creation of a tower.

C. Variation in roof shape.

D. Change of color or materials.

E. Addition of a design enhancement feature such as:

i. Embellished entrance areas.

ii. Articulated corners, especially when entrance is at corner, rounded or chamfered corners ease the transitions from one street facade to the adjoining facade.

iii. Recessed or projecting balconies and entrances.

Billboards, advertising and signage are expressly prohibited as appropriate focal points.

UDC Section 35-673. – Site Design Standards

(a) Solar Access. The intent of providing and maintaining solar access to the San Antonio River is to protect the river's specific ecoclimate. The river has a special microclimate of natural and planted vegetation that requires certain levels and balanced amounts of sunlight, space and water. Development must be designed to respect and protect those natural requirements, keeping them in balance and not crowding or altering them so that vegetation does not receive more or less space and water, but particularly sunlight, than is required for normal expected growth.

(1) Building Massing to Provide Solar Access to the River. Building massing shall be so designed as to provide direct sunlight to vegetation in the river channel as defined:

A. The area to be measured for solar access shall be a thirty-foot setback from the river's edge or from the river's edge to the building face, which ever is lesser, parallel to the river for the length of the property.

B. The solar calculations shall be measured exclusive to the applicant's property; that is, shades and shadows of other buildings shall not be included in the calculations. The solar calculations shall only measure the impact of new construction and additions. The shading impact of historic buildings on the site may be excluded from the calculations.

C. The defined area shall receive a minimum of 5.5 hours of direct sunlight, measured at the winter solstice, and 7.5 hours of direct sunlight, measured at the summer solstice.

D. Those properties located on the south side of the river (whose north face is adjacent to the river) shall only be required to measure the sunlight in the 30-foot setback on the opposite bank of the river.

E. Those properties within the river improvement overlay district not directly adjacent to the river are still subject to the provisions of this section. To determine the solar access effect of these buildings on the river the applicant must measure the nearest point to the river of an area defined by a thirty-foot setback from the river's edge, parallel to the river for the length of their property that would be affected by their building. For those buildings on the south side of the river, the 30-foot setback shall be measured only on the opposite bank.

F. However, in those cases where the above conditions cannot be met due to the natural configuration of the river, existing street patterns, or existing buildings, the HDRC may approve a buildings mass and height as allowed by table 674-2.

G. If there is a conflict with this section and another section of this chapter this section shall prevail.

(2) Prohibition of Structures, Buildings, Roofs or Skywalks Over the River Channel. No structure, building, roof or skywalk may be constructed over the river channel, or by-pass channel with the exception of structures for flood control purposes, open air pedestrian bridges at ground or river level, and street bridges. The river channel is the natural course of the river as modified for flood control purposes and the Pershing-Catalpa ditch.

(b) Building Orientation. Buildings should be sited to help define active spaces for area users, provide pedestrian connections between sites, help animate the street scene and define street edges. Consideration to both the street and riverside should be given. The placement of a building on a site should therefore be considered within the context of the block, as well as how the structure will support the broader design goals for the area.

(1) Two or More Buildings on a Site.

A. Cluster buildings to create active open spaces such as courtyards along the street and river edges. Site plazas and courtyards, if possible, so that they are shaded in the summer and are sunny in the winter.

(2) Primary and Secondary Entrances

A. Orient a building's primary entrance toward the street with subordinate entrances located on the riverside and/or the interior of the property. On a major thoroughfare street it is acceptable to provide the primary

entrance through a common courtyard and then to a street.

B. The primary entrance shall be distinguished by architectural features such as, but not limited to: an entry portal; change in material or color; change in scale of other openings; addition of columns, lintels or canopies.

C. Secondary entrances shall have architectural features that are subordinate to the primary entrance in scale and detail. For purposes of this division subordinate means that the entrance is smaller in height and width, and has fewer or simpler architectural elements.

(c) Topography and Drainage. The natural contours of occasional hillsides and riverbanks contribute to the distinct character of the San Antonio River and shall be considered in site designs for new development. Site plans shall minimize the need for cut and fill. It should be considered as an opportunity for positive enhancements through the creative use of terraces and retaining walls.

(1) Visual Impacts of Cut and Fill. Divide a grade change of more than ten (10) vertical feet into a series of benches and terraces. Terrace steep slopes following site contours. When creating site benches, using sloped "transitional areas" as part of the required landscaping is appropriate.

(2) Minimize the Potential for Erosion at the Riverbank. Grade slopes at a stable angle not to exceed four to one (4:1) and provide plant material that will stabilize the soil such as vigorous ground covers, vines or turf planting that are native and noninvasive species as found on the permissible plant list maintained by the parks and recreation department. Use of stabilizing materials such as geo-web or geo-grid is permitted as long as plant material is used to conceal the grid.

Use of terraced walls is permitted when there is a slope of more than four to one (4:1).

(3) Retaining Walls. Limit the height of a retaining wall to less than six (6) feet. If the retaining wall must exceed six (6) feet, a series of six-foot terrace walls is acceptable. Walls at dams and locks are excluded from this requirement. If in the opinion of the historic preservation officer a higher wall is consistent with the adopted conceptual plan of the river, a higher wall (not to exceed twelve (12) feet) is allowed. Materials used for the walls may include limestone, stucco, brick, clay, tile, timber, or textured concrete. (see Figure 673-2)

(4) Enhance or Incorporate Acequias Into The Landscape Design and Drainage Scheme of the Site. Where archeological evidence indicates a site contains or has contained a Spanish colonial acequia, incorporate the original path of the acequia as a natural drainageway or a landscape feature of the site by including it as part of the open space plan, and a feature of the landscape design.

(5) Design of Stormwater Management Facilities to be a Landscape Amenity. Where above ground stormwater management facilities are required, such facilities shall be multi-purpose amenities. For example, water quality features can be included as part of the site landscaping and detention facilities can be included as part of a hardscape patio. Using an open concrete basin as a detention pond is prohibited.

(6) Walls and Fences at Detention Areas.

A. When the topography of the site exceeds a four to one (4:1) slope and it becomes necessary to use a masonry wall as part of the detention area, use a textured surface and incorporate plant materials, from the plant list maintained by the parks department, that will drape over the edge to soften the appearance of the structure.

B. The use of solid board or chain link fence with or without slats is prohibited. A welded wire, tubular steel, wrought iron or garden loop is permitted.

(7) Roof Drainage into the River.

A. All roof drainage and other run-off drainage shall conform to public works department standards so that they \ drain into sewer and storm drains rather than the river. Drainage of this type shall not be piped into the river unless the outlet is below the normal waterline of the river at normal flow rates.

B. All downspouts or gutters draining water from roofs or parapets shall be extended underground under walks and patios to the San Antonio River's edge or stormwater detention facility so that such drainage will not erode or otherwise damage the Riverwalk, landscaping or river retaining walls.

C. All piping and air-conditioning wastewater systems shall be kept in good repair. Water to be drained purposely from these systems, after being tested and adjudged free from pollution, shall be drained in the same manner prescribed in subsection (7)A. above.

(d) Riverside Setbacks. Riverside setbacks for both buildings and accessory structures are established to reinforce the defined character of the specific river improvement overlay district and help to define an edge at the river pathway that is varied according to the relationship of the river and the street. In the more urban areas, buildings should align closer to the river edge, while in more rural areas the buildings should be set farther away.

(1)Minimum setback requirements are per the following Table 673-1.

Description	RIO-1	RIO-2	RIO-3	RIO-4	RIO-5	RIO-6
Riverside Setback	20 FT	15 FT	0 FT	20 FT	50 ft	100 FT

(2)Designation of a development node district provides for a minimum riverside setback of zero (0) feet.

(e)Landscape Design. Lush and varied landscapes are part of the tradition of the San Antonio River. These design standards apply to landscaping within an individual site. Additional standards follow that provide more specific standards for the public pathway along the river and street edges.

(1)Provide Variety in Landscape Design. Provide variety in the landscape experience along the river by varying landscape designs between properties. No more than seventy-five (75) percent of the landscape materials, including plants, shall be the same as those on adjacent properties. (see Figure 673-4).

(2) Planting Requirements in Open Space Abutting the River. On publicly-owned land leased by the adjoining property owner, if applicable, and/or within privately owned setbacks adjacent to the river, a minimum percentage of the open space, excluding building footprint, lease space under bridges and parking requirements, are required to be planted according to Table 673-2.

A. Planting requirements in RIO-4, RIO-5, and RIO-6 should continue the restoration landscape efforts along the river banks. Planting in these RIO districts is to be less formal so as to maintain the rural setting of the river.

B. In "RIO-3," if existing conditions don't meet the standards as set out in Table 673-2, the owner or lessee will not have to remove paving to add landscaping in order to meet the standards until there is a substantial remodeling of the outdoor area. Substantial remodeling will include replacement of seventy-five (75) percent of the paving materials, or replacement of balcony and stair structures.

(f) Plant Materials. A number of soil conditions converge in the San Antonio area to create unique vegetation ecosystems. Along the route of the San Antonio River, the soil conditions vary greatly from the northern boundary near Hildebrand to the city limits near Mission San Francisco de la Espada (Mission Espada) and therefore native and indigenous plants will vary accordingly. Landscaping should reflect the unique soil characteristics of the specific site.

(1) Incorporate Existing Vegetation. Extend the use of landscape materials, including plants, shrubs and trees that are used in the public areas of the river onto adjacent private areas to form a cohesive design.

(2) Use indigenous and noninvasive species characteristic of the specific site as found on the permissible plant list maintained by the parks and recreation department or the Unified Development Code Plant List found in Appendix E. In "RIO-3," plantings of tropical and semi-tropical plants with perennial background is permitted.

(3) Install Trees to Provide Shade and to Separate Pedestrians From Automobile Traffic. Install street trees along the property line or in the ROW abutting all streets according to minimum requirement standards established in subsection 35-512(b), except where this conflicts with existing downtown Tri-Party improvements in "RIO-3." In "RIO-3" the owner has the option of placing trees at the property line, or along the street edge.

(g) Paving Materials. An important San Antonio landscape tradition is the use of decorative surfaces for paving and other landscape structures. Paving materials and patterns should be carefully chosen to preserve and enhance the pedestrian experience.

(1) Vary Walkway, Patio and Courtyard Paving to Add Visual Interest on the Riverside of Properties Abutting the River. Pervious paving is encouraged where feasible and appropriate to the site.

A. A maximum of six hundred (600) square feet is allowed for a single paving material before the paving material must be divided or separated with a paving material that is different in texture, pattern, color or material. A separation using a different material must be a minimum of twenty-four (24) inches wide, the full width of the pathway.

B. A maximum of one hundred (100) lineal feet is allowed in a walkway before the pattern must change in districts "RIO-2," "RIO-3," and "RIO-4." A maximum of five hundred twenty-eight (528) lineal feet is allowed before the pattern must change in districts "RIO-1," "RIO-5" and "RIO-6." The change of material at five hundred twenty-eight (528) lineal feet will define and delineate one-tenth-mile markers.

C. In "RIO-3," the Riverwalk pathway shall be delineated by using a separate material that is clearly distinguished from the adjacent patio paving materials. If the historic Hugman drawings indicate a sidewalk width and pattern on the site, that paving pattern and material shall be replicated.

(h) Site Walls and Fences. Site walls and fences are used to help divide spaces, screen unsightly objects and provide privacy. However, the character of the San Antonio River is such that walls shall not be erected in such a way as to block views of the river from public spaces.

(1) Use of Site Walls to Define Outdoor Spaces.

A. Use of low scale walls (twenty-four (24) inches to forty-eight (48) inches) to divide space, create a variety in

landscaping and define edges is permitted.

B. Solid walls (up to seventy-two (72) inches) are permitted to: screen mechanical equipment, garbage receptacles and other unsightly areas; and provide privacy at the back of lots up to the front building face.

(2) Site Wall and Fence Materials.

A. On properties abutting the river, site walls and fence materials may be constructed of: stone, block, tile, stucco, wrought iron, tubular steel, welded wire or a combination of masonry and metal, cedar posts and welded wire or garden loop or other materials having similar characteristics. All other properties, not abutting the river may use the above listed materials plus wood fencing.

B. All chain link fences are prohibited for properties abutting the river. For properties that do not abut the river chain link is only allowed in the rear yard if not readily visible from the right-of-way. Barbed wire, razor wire, and concertina are prohibited in all RIO districts.

(i) Street Furnishings. Street furnishings are exterior amenities, including but not limited to, tables, chairs, umbrellas, landscape pots, wait stations, valet stations, bicycle racks, planters, benches, bus shelters, kiosks, waste receptacles and similar items that help to define pedestrian use areas. Handcrafted street furnishings are particularly important in San Antonio, and therefore this tradition of craftsmanship and of providing street furniture is encouraged.

(1) Prohibited Street Furnishings in Riverwalk Area. The following street furnishings are prohibited within the publicly owned portion of the Riverwalk area, whether or not the property is leased, and on the exterior of the riverside of buildings directly adjacent to the publicly owned portion of the river:

A. Vending machines.

B. Automatic teller machines.

C. Pay phones.

D. Photo booths.

E. Automated machines such as, but not limited to, penny crunching machines, blood pressure machines, fortune-telling machines, video games, animated characters and other machines that are internally illuminated, or have moving parts, or make noise, or have flashing lights.

F. Inanimate figures such as horses, kangaroos, bears, gorillas, mannequins or any such animal, cartoon or human figure. This section does not affect public art as defined in Appendix "A" of this chapter.

G. Monitors (i.e., television screens, computer screens).

H. Speakers.

(2) Street Furnishing Materials.

A. Street furnishings shall be made of wood, metal, stone, terra cotta, cast stone, hand-sculpted concrete, or solid surfacing material, such as Corian or Surell.

B. Inexpensive plastic resin furnishings are prohibited.

(3) Advertising on Street Furnishings.

A. No commercial logos, trademarks, decals, product names whether specific or generic, or names of businesses and organizations shall be allowed on street furnishings.

B. Product or business advertising is prohibited on all street furnishings.

C. Notwithstanding the restrictions above, applications may be approved for purposes of donor or non-profit recognition.

(4) Street furnishings, such as tables and chairs may not be stored (other than overnight storage) in such a way as to be visible from the river pathway.

(j) Lighting. Site lighting should be considered an integral element of the landscape design of a property. It should help define activity areas and provide interest at night. At the same time, lighting should facilitate safe and convenient circulation for pedestrians, bicyclists and motorists. Overspill of light and light pollution should be avoided.

(1) Site Lighting. Site lighting shall be shielded by permanent attachments to light fixtures so that the light sources are not visible from a public way and any offsite glare is prevented.

A. Site lighting shall include illumination of parking areas, buildings, pedestrian routes, dining areas, design features and public ways.

B. Outdoor spaces adjoining and visible from the river right-of-way shall have average ambient light levels of between one (1) and three (3) foot-candles with a minimum of 0.5-foot candles and a maximum of six (6) foot-candles at any point measured on the ground plane. Interior spaces visible from the river right-of-way on the river level and ground floor level shall use light sources with no more than the equivalent lumens of a one hundred-watt incandescent bulb. Exterior balconies, porches and canopies adjoining and visible from the river right-of-way shall use light sources with the equivalent lumens of a sixty-watt incandescent bulb with average

ambient light levels no greater than the lumen out put of a one hundred-watt incandescent light bulb as long as average foot candle standards are not exceeded. Accent lighting of landscape or building features including specimen plants, gates, entries, water features, art work, stairs, and ramps may exceed these standards by a multiple of 2.5. Recreational fields and activity areas that require higher light levels shall be screened from the river hike and bike pathways with a landscape buffer.

C. Exterior light fixtures that use the equivalent of more than one hundred-watt incandescent bulbs shall not emit a significant amount of the fixture's total output above a vertical cut-off angle of ninety (90) degrees. Any structural part of the fixture providing this cut-off angle must be permanently affixed.

D. Lighting spillover to the publicly owned areas of the river or across property lines shall not exceed one-half (½) of one (1) foot-candle measured at any point ten (10) feet beyond the property line.

(2) Provide Lighting for Pedestrian Ways That is Low Scaled for Walking. The position of a lamp in a pedestrian-way light shall not exceed fifteen (15) feet in height above the ground.

(3) Light Temperature and Color.

A. Light temperature and color shall be between 2500° K and 3500° K with a color rendition index (CRI) of eighty (80) or higher, respectively. This restriction is limited to all outdoor spaces adjoining and visible from the river right-of-way and from the interior spaces adjoining the river right-of-way on the river level and ground floor level. Levels shall be determined by product specifications.

(4) Minimize the Visual Impacts of Exterior Building Lighting.

A. All security lighting shall be shielded so that the light sources are not visible from a public way.

B. Lighting (uplighting and downlighting) that is positioned to highlight a building or outdoor artwork shall be aimed at the object to be illuminated, not pointed into the sky.

C. Fixtures shall not distract from, or obscure important architectural features of the building. Lighting fixtures shall be a subordinate feature on the building unless they are incorporated into the over-all design scheme of the building.

(5) Prohibited Lighting on the Riverside of Properties Abutting the River.

A. Flashing lights.

B. Rotating lights.

C. Chaser lights.

D. Exposed neon.

E. Seasonal decorating lights such as festoon, string or rope lights, except between November 20 and January 10.

F. Flood lamps.

(6) Minimize the visual impacts of lighting in parking areas in order to enhance the perception of the nighttime sky and to prevent glare onto adjacent properties. Parking lot light poles are limited to thirty (30) feet in height, shall have a 90° cutoff angle so as to not emit light above the horizontal plane.

(k) Curbs and Gutters.

(1) Construct Curb and Gutter Along the Street Edge of a Property.

A. Install curbs and gutter along the street edge at the time of improving a parcel.

B. In order to preserve the rural character of RIO-5 and RIO-6, the HPO in coordination with public works and the development services department may waive the requirement of curbs and gutters.

(l) Access to Public Pathway Along the River. These requirements are specifically for those properties adjacent to the river to provide a connection to the publicly owned pathway along the river. The connections are to stimulate and enhance urban activity, provide path connections in an urban context, enliven street activity, and protect the ambiance and character of the river area.

(1) A stair, ramp or elevator connecting the publicly owned pathway at the river to private property along the river is allowed by right at the following locations:

A. At all street and vehicular bridge crossings over the river.

B. Where publicly owned streets dead end into the river.

C. Where the pedestrian pathway in the Riverwalk area is located at the top of bank and there is a two-foot or less grade change between the private property and the pathway.

(2) If there is a grade change greater than two (2) feet between the private property and the publicly owned pathway at the river then the following conditions apply:

A. Access to the publicly owned pathway is limited to one (1) connection per property, with the exception that connections are always allowed at street and vehicular bridge crossings. For example if one (1) property extends

the entire block face from street crossing to street crossing the owner would be allowed three (3) access points if the distance requirements were met.

B. The minimum distance between access points shall be ninety-five (95) feet. Only street and vehicular bridge connections are exempted. Mid-block access points must meet this requirement.

C. Reciprocal access agreements between property owners are permitted.

(3) Clearly define a key pedestrian gateway into the site from the publicly owned pathway at the river with distinctive architectural or landscape elements.

A. The primary gateway from a development to the publicly owned pathway at the river shall be defined by an architectural or landscape element made of stone, brick, tile, metal, rough hewn cedar or hand-formed concrete or through the use of distinctive plantings or planting beds.

(m) Buffering and Screening. The manner in which screening and buffering elements are designed on a site greatly affects the character of the river districts. In general, service areas shall be screened or buffered. "Buffers" are considered to be landscaped berms, planters or planting beds; whereas, more solid "screens" include fences and walls. When site development creates an unavoidable negative visual impact on abutting properties or to the public right-of-way, it shall be mitigated with a landscape design that will buffer or screen it.

(1) Landscape Buffers Shall be Used in the Following Circumstances: To buffer the edges of a parking lot from pedestrian ways and outdoor use areas, (such as patios, and courtyards), and as an option to screening in order to buffer service areas, garbage disposal areas, mechanical equipment, storage areas, maintenance yards, equipment storage areas and other similar activities that by their nature create unsightly views from pedestrian ways, streets, public ROWs and adjoining property.

(2) Screening Elements Shall be Used in the Following Circumstances: To screen service areas, storage areas, or garbage areas from pedestrian ways.

(3) Exceptions for Site Constraints. Due to site constraints, in all RIOs and specifically for "RIO-3" where there is less than ten (10) feet to provide for the minimum landscape berm, a screen may be used in conjunction with plantings to meet the intent of these standards. For example a low site wall may be combined with plant materials to create a buffer with a lesser cross sectional width.

(4) Applicable Bufferyard Types. Table 510-2 establishes minimum plant materials required for each bufferyard type. For purposes of this section, type C shall be the acceptable minimum type.

(5) Applicable Screening Fence and Wall Types. Screening fences and walls shall be subject to conditions of subsection 35-673(h), Walls and Fences.

(n) Service Areas and Mechanical Equipment. Service areas and mechanical equipment should be visually unobtrusive and should be integrated with the design of the site and building. Noise generated from mechanical equipment shall not exceed city noise regulations.

(1) Locate service entrances, waste disposal areas and other similar uses adjacent to service lanes and away from major streets and the river.

A. Position utility boxes so that they cannot be seen from the public Riverwalk path, or from major streets, by locating them on the sides of buildings and away from pedestrian and vehicular routes. Locating them within interior building corners, at building offsets or other similar locations where the building mass acts as a shield from public view is preferred.

B. Orient the door to a trash enclosure to face away from the street when feasible.

C. Air intake and exhaust systems, or other mechanical equipment that generates noise, smoke or odors, shall not be located at the pedestrian level.

(2) Screening of service entrance shall be compatible with the buildings on the block face.

A. When it would be visible from a public way, a service area shall be visually compatible with the buildings on the block face.

B. A wall will be considered compatible if it uses the same material as other buildings on the block, or is painted a neutral color such as beige, gray or dark green or if it is in keeping with the color scheme of the adjacent building.

(o) Bicycle Parking. On-site bicycle parking helps promote a long term sustainable strategy for development in RIO districts. Bicycle parking shall be placed in a well lit and accessible area. UDC bicycle parking requirements in UDC 35-526 can be met through indoor bicycle storage facilities in lieu of outdoor bike rack fixtures.

Sec. 35-674.02. - Building Design Principles in RIO-7.

This section provides policies and standards for the design of commercial, multi-family developments in excess of eight

(8) units, and single-family developments in excess of five (5) units, institutional developments, and industrial buildings within the river improvement overlay districts. In general, principles align with the standards and guidelines established for the Downtown Business District.

(a) Mass and Scale. A building shall appear to have a "human scale." In general, this scale can be accomplished by using familiar forms and elements interpreted in human dimensions. Exterior wall designs shall help pedestrians establish a sense of scale with relation to each building. Articulating the number of floors in a building can help to establish a building's scale, for example, and prevent larger buildings from dwarfing the pedestrian.

(1) Reduce large floor plates and varying a building's height through the creation of smaller structures or facades when designing large projects that consume half a block or more. Sculpt a building's mass to avoid large bulky structures, which provide more visual monotony than variety. It is the well-balanced variety of building massing and textures of shadow, light and materials that in total adds to the richness of the built environment.

(2) Design building massing to reinforce the street wall with well-scaled elements or structures that are sensitive to the neighborhood context.

A. Divide large building facades into a series of appropriately scaled modules so that no building segment is more than ninety (90) feet in length. Consider dividing a larger building into "modules" that are similar in scale.

B. Monolithic slab-like structures that wall off views and overshadow the surrounding neighborhood are discouraged.

C. New buildings over seventy-five (75) feet tall should incorporate design elements that provide a base, middle and a top. Buildings less than seventy-five (75) feet should have a pedestrian scaled base with a cornice, eave, or other architectural element that gives the building a discernable edge at the top story.

D. Where a new building is infilled between an existing historic buildings on a block:

i. The new building should, to the extent possible, maintain the alignment of horizontal elements along the block.

ii. Floor-to-floor heights should appear to be similar to those seen in the area, particularly the window fenestration.

iii. Align at least one (1) horizontal building element with another horizontal building element on the same block face. It will be considered to be within alignment if it is within three (3) feet, measured vertically, of the existing architectural element.

(b) Height. Building heights vary along the creek corridor, from one-story houses to high-rises. This diversity of building heights is expected to continue. Building heights shall be configured such that a comfortable human scale is established along the edges of properties and views to the creek and other significant landmarks are provided while allowing the appropriate density for an area.

A. The maximum building height and creek-side building step-backs shall be as defined in Table 674-3.

B. Building step-backs shall be at least fifteen (15) feet.

C. Buildings may be built to the height allowed without stepping back by aligning the lower floors with step-back-line creating more street level open space between the building and the creek.

(1) High-rise towers above ten (10) stories are encouraged in RIO-7a and allowed in RIO-7b when not in conflict with the Historic Design Guidelines. Towers are not allowed to form a continuous wall along the creek but shall be carefully sited to provide both views and privacy. Tower forms should be simple yet elegant and add a sculptural quality to the Downtown San Antonio skyline.

A. Towers should be combined with other building forms along the creek including townhouses, stacked flats, and mid-rise mixed-use buildings to create a variety of residential and office opportunities.

B. Towers should have their massing designed to reduce overall bulk and to appear slender as they ascend higher.

C. Towers may extend directly up from the property line at the street and are not required to be setback.

D. Tower siting and massing should maintain key views toward important natural or man-made features.

E. Design the middle segment or tower of the building to break up the overall bulk into smaller segments and address impacts such as shadowing and views. Reduce the perception of mass through architectural detailing such as changes of materials and color.

F. Design the top of buildings to be a "fifth facade" that may be distinctive against the skyline when looked up to or viewed from above. A well-designed roofline creates opportunities for sky views and

views to distinctive landmarks; creates opportunities for sunlight to reach the ground, and orients the public when wayfinding. Design the top of the building and/or the top of its podium to include opportunity for communal outdoor amenity space and/or a place for environmental innovation such as green roofs, rainwater recovery and solar panels.

G. Towers should be designed to achieve a simple faceted geometry and large vertical plane movement. They should not appear overwrought or to have over-manipulated elements.

H. Towers that emulate a more streamline modern style should provide variation through subtle details in the curtain wall, and the articulation of a human-scaled base at the street level.

I. If a project has more than one tower, they should be complementary to each other and employ the same architectural design approach.

J. Generally, buildings over one hundred fifty (150) feet tall should not be historicized. They should represent contemporary interventions in the skyline.

K. A tower's primary building entrances should be designed at a scale appropriate to the overall size and design of the tower and be clearly marked.

L. A building's top should be delineated with a change of detail and meet the sky with a thinner form, or tapered point. Unarticulated, flat-topped buildings are not desired in Downtown San Antonio's skyline.

M. Mechanical Penthouses should be integrated into the tower design and should not appear as a separate element, as shown in Figure 5.7.

(2) Low-rise and mid-rise buildings are encouraged in RIO-7c, RIO-7d, and RIO-7e. (3) In RIO 7-d, organize the mass of the building to step back from established residential neighborhoods. Where a commercial, mixed-use residential, multi-family or industrial use abuts a single-family residential development, or is across the street from a single-family residential development, the following standards shall apply:

A. The massing of the building shall not exceed twenty-five (25) feet in height at the setback line. The building mass can continue upward within a 45-degree building envelope for a distance of fifty (50) feet measured horizontally from the building face, at which point the building massing may continue vertically to the height established in subsection 35-674(c).

(c) Materials and Finishes.After establishing a new building's overall massing and vertical and horizontal variation, it is important to develop a building's visual character at the level of material choices and detailing. The interplay of materials, windows and other elements should support the larger design principles as articulated by the architect. Ensure that buildings have architecturally detailed facades, where publicly visible, with no blank or featureless sides in anticipation of abutting to potential development in later phases or on adjacent land.

(1) Buildings are supposed to aim for a "timeless design" and employ sustainable materials and careful detailing that have proven longevity.

A. San Antonio has strong sun conditions. Use deep reveals to get shadow lines and if colors are desired, saturated colors and evaluate these outside on site.

B. Feature long-lived and local materials such as split limestone, brick and stone. The material palette should provide variety, reinforce massing and changes in the horizontal or vertical plane.

C. Use especially durable materials on ground floor facades.

D. Generally, stucco is not desirable on the ground floor as it is not particularly durable. Detail buildings with rigor and clarity to reinforce the architect's design intentions and to help set a standard of quality to guild the built results.

E. To provide visual variety and depth, layer the building skin and provide a variety of textures that bear a direct relationship to the building's massing and structural elements. The skin should reinforce the integrity of the design concept and the building's structural elements as seen in Figure 7.5 and 7.6 of the Downtown Design Guide and not appear as surface pastiche.

F. Layering can also be achieved through extension of two (2) adjacent building planes that are extended from the primary facade to provide a modern sculptural composition.

G. Cut outs (often used to create sky gardens) should be an appropriate scale and provide a comfortable, usable outdoor space.

H. Design curtain walls with detail and texture, while employing the highest quality materials.

I. Design the color palette for a building to reinforce building identity and complement changes in the horizontal or vertical plane.

J. Value-added materials, such as stone should be placed at the base of the building, especially at the first

floor level. Select materials suitable for a pedestrian urban environment. Impervious materials such as stone, metal or glass should be used on the building exterior. Materials will be made graffiti resistant or be easily repainted.

K. Corner buildings at prominent intersections require a higher standard of articulation, detailing, and architectural treatment than other buildings within the middle of the block.

L. RIO-7e is a mixed-use transition area with single family houses, some masonry commercial buildings, concrete warehouses, and long metal sheds built next to railroad sidings. In this district, the historic preservation officer may approve non-traditional building materials, like corrugated metal siding and concrete panels, if well detailed and compatible with the traditional building forms and scale of the district.

(2) Prohibited Exterior Materials.

A. Imitation stone (fiberglass or plastic);

B. Plywood or decorative exterior plywood;

C. "Lumpy" stucco, CMU;

D. Rough sawn or "natural" (unfinished) wood, EIFS;

E. Used brick with no fired face (salvaged from interior walls);

F. Imitation wood siding;

G. Plastic panels.

(e) Pedestrian Orientation. New buildings should follow the principles of good urban design, creating active street and creek facades and focusing on enhancing the public realm of the streets and the creek.

(1) Buildings ought to create a familiar rhythm relative to the overall street. The rhythm and pattern helps to tie the street together visually and provides the pedestrian with a standard measurement of progress. Reinforcement of this facade rhythm is encouraged in new buildings, even if a singular structure (see Figure 7.1 in the Downtown Design Guide).

(2) New development ought to respect the existing fabric of the community by reflecting historic mixed-use development patterns, through the use of building indentations, relationship to the street, first floor plate height, breaks in buildings for open space, and changes in color to avoid monolithic and monochromatic developments.

(3) Horizontal Variation. Vary the horizontal plane of a building to provide visual interest and enrich the pedestrian experience, while contributing to the quality and definition of the street wall.

A. Provide well-marked entrances to cue access and use. Enhance all public entrances to a building through the use of compatible architectural or graphic treatment. Main building entrance shall read differently from retail storefronts, restaurant, and commercial entrances.

B. Avoid continuous massing longer than ninety (90) feet not articulated with shadow relief, projections and recessed. If massing extends beyond the is length, it needs to be visibly articulated as several smaller masses using different material, vertical breaks, such as expressed bay widths, or other architectural elements.

C. Horizontal variation should be of an appropriate scale and reflect changes in the building uses or structure as seen in Figure 7.2.4 of the Downtown Design Guide.

D. Vary details and materials horizontally to provide scale and three-dimensional qualities to the building.

E. While blank street wall facades are discouraged, there is usually one side of the building that is less prominent (often times called "back of house").

(4) Vertical Variation. Both classical and modern buildings can exhibit basic principles of visual order in the vertical plane—often with a distinct base (street and pedestrian lower levels), a middle (core mid-section, and often consistent for multiple floors of a mid- to high-rise building), and a top (the upper level that distinguishes a building and defines how it "meets the sky") as seen in Figure 7.3 of the Downtown Design Guide.

A. Modern or contemporary building designs often layer this principle with more variation and syncopation to create interesting architectural composition as seen in Figure 7.4 of the Downtown Design Guide. Whenever a new infill building is proposed between two (2) existing structures, every attempt should be made to maintain the characteristic rhythm, proportion, and spacing of existing door and window openings. B. Variation in the vertical plane of a building ought to define the building's uses and visually differentiate ground floor uses, from core functions and how the building "meets the sky."

i. Employ a different architectural treatment on the ground floor facade than on the upper floors, and feature high quality materials that add scale, texture and variety at the pedestrian level.

ii. Vertically articulate the street wall facade, establishing different treatment for the building's base, (middle and top) and use balconies, fenestration, or other elements to create an interesting pattern of projections and recesses.

iii. Provide an identifiable break between the building's ground floors and upper floors designed for office or other use. This break may include a change in material, change in fenestration pattern or similar means.

iv. In order to respect existing historic datums, the cornice or roof line of historic structures should be reflected with a demarcation on new infill structures whenever possible.

v. On facades exposed to the sun, employ shade and shadow created by reveals, surface changes, overhangs, and sunshades to provide sustainable benefits and visual interest.

vi. Buildings taller than seventy-five (75) feet should employ at least two (2) vertical breaks or reveals greater than three (3) feet in depth to divide the bulkiness of the mass.

(5) Fenestration. Provide high-performance, well-detailed windows and doors that add to the depth and scale of a building's facade.

A. Windows are to be as transparent as possible at the ground floor of the building, with preference given to grey, low-e glass (eighty-eight (88) percent light transmission).

B. Window placement, size, material and style should help define a building's architectural style and integrity.

C. In buildings other than curtain wall buildings, windows should be recessed (set back) from the exterior building wall, except where inappropriate to the building's architectural style. Generally, the required recess may not be accomplished by the use of plantings around the window.

D. Windows and doors should be well-detailed where they meet the exterior wall to provide adequate weather protection and to create a shadow line.

E. Windows on upper floors should be proportioned and placed in relation to grouping of storefront or other windows and elements in the base floor. Windows should have a vertical emphasis.

F. Glazing. Incorporate glazing that contributes to a warm, inviting environment for interior spaces.

i. Ground-floor window and door glazing should be transparent and non-reflective.

ii. Above the ground floor, both curtain wall and window and door glazing should have the minimum reflectivity needed to achieve energy efficiency standards. Non-reflective coating or tints are preferred.

iii. A limited amount of translucent glazing at the ground floor may be used to provide privacy.

(6) Street Wall. In order to support a pedestrian-oriented public realm, retail or commercial streets should be framed by buildings uniformly placed at the sidewalk with no setback as seen in Figure 5.5 of the Downtown Design Guide. The height of the street wall is an important element in shaping the character of the public realm. Design building walls along the sidewalk (Street Walls) to define the street and to provide a comfortable scale for pedestrians.

A. Street walls should be located against the back of sidewalk.

B. Walls above the ground floor that step back from the ground floor street wall are considered to be part of the street wall.

C. Breaks in the street wall should be limited to those necessary to accommodate pedestrian pass-through, public plazas, entry forecourts, permitted vehicular access driveways, and hotel drop-offs.

D. An identifiable break should be provided between a building's retail floors (ground level and, in some cases, second and third floors) and upper floors. This break may consist of a change in material, change in fenestration, or similar means.

E. Vertical breaks should also be taken into account with fenestration such as columns or bays.

F. When a property is situated in such a manner as to appear to be the terminus at the end of a street or at a prominent curve in the creek, buildings should incorporate an architectural feature that will provide a focal point at the end of the view. These features may include:

i. Enhanced building facade.

ii. Enhanced garden or landscape in an open space.

iii. Variation in roof shape. iv. Change material and color.

v. Tower element.

(7) In contrast to the design of buildings along the sidewalks described in (b)(9) the creek side of buildings should not establish a uniform, aligned wall but rather a series of related and connected gardens, plazas, and patios. These

On-site Open Spaces (see subsection 35-673(q)) should be integrated with the San Pedro Creek Improvements Project. Where a building facade faces the creek it should recognize the historic proportions of lots and resulting building forms. Lots were generally seventy (70) to ninety (90) feet wide along the creek but several hundred feet deep. The resulting building forms are long bar-shapes running perpendicular to the creek.

A. The best views of the creek are generally perpendicular to the creek not parallel to the creek. Rectangular buildings should have the narrow face parallel to the creek and the long face perpendicular to the creek. See Figure 674-1. i. Bends in the creek provide a unique opportunity for siting buildings to maximize views and may provide unique challenges. The Historic Preservation Officer may consider different building orientations for these sites if the overall goals for RIO-7 are met.

B. Buildings are not allowed to have a continuous, flat facade lot-line to lot-line along the creek property line. Building massing should turn perpendicular to the creek and form gardens, courts, patios, paseos, and plazas between buildings and/or different building masses. Windows, balconies, or other ways of viewing these publically accessible open spaces is high encouraged. The following On-Site Open Spaces required by building length may be used as one of the On-Site Open Spaces required by Table 673-3. i. The maximum length of a building wall plane is ninety (90) feet. Buildings with facades longer than ninety (90) feet must use side-yard courts, courtyards, or forecourts to divide the facade into modules less than ninety (90) feet long. ii. Buildings or a collection of buildings built concurrently with a creek-face longer than two hundred seventy (270) feet are required to have a forecourt, courtyard, creek-side plaza, garden, paseo, or pedestrian-oriented service drive to divide the mass of the building and provide publicly accessible open space. iii. Single developments with three hundred (300) linear feet of creek frontage or greater should have at least two (2) distinct building types or building heights along the creek property line with no more than seventy (70) percent of any one building type. Building types are defined in Downtown Design Guidelines. iv. Buildings that setback more than thirty (30) feet from the creek-side setback line and provide publicly accessible gardens, patios, plazas, or terraces are not required to provide additional publicly accessible open spaces. v. Sites that are five hundred fifty (550) feet or longer should provide mid-block paseos, pedestrian oriented mid-block service drives and fire lane, or pedestrian friendly public access and should connect from a public street to another public street, public alley, or the San Pedro Creek. Where San Antonio Public Works and/or Texas Department of Transportation (TxDOT) has provided approval, per Chapter 8 Section C of the Downtown Design Guide, connections should try to align within one hundred (100) feet of the mid-block connection.

(8) Develop the first floor to activate the creek paseos and street sidewalks.

A. In mixed-use buildings, retail buildings, or office buildings the creek side facade should be primarily transparent with seventy-five (75) percent of the length of the facade devoted to display windows and/or windows affording some view into the interior areas or offices. Facades facing Primary and Secondary Pedestrian Streets listed in subsection 35-672(b)(1)D Curb Cuts should have at least fifty (50) [percent] of the facade devoted to windows. Facades facing side streets should have at least twenty-five (25) percent of the facade devoted to windows. Side-street facades should contribute to the pedestrian friendly environment and activate the street when possible. These facades are important in activating the connections from the surrounding neighborhoods to the creek.

B. In multi-family residential buildings with no retail, arrange support facilities, management offices, and building amenities along the creek and streets with a minimum of seventy-five (75) percent of the exterior facade associated with these spaces. Provide building and ground floor residential unit entrances to pedestrian paths that connect to the high-bank paseo or publicly accessible path at the top-of-bank along the low-bank paseo.

C. Institutional and civic buildings should arrange functions and entrances to provide access and views to internal functions.

D. Alternate arrangements that provide creek and street activation may be approved by the historic preservation officer.

(9) Design ground floor space for retail or other active uses, orienting tenant spaces to the street and creek and maximizing storefronts and entries along the sidewalks to sustain street level interest and promote pedestrian traffic.

A. Locate active uses along the street and creek facade to enhance the building's relationship to the public realm. Uses include: lobbies, dining rooms, seating areas, offices, retail stores, community or institutional uses, and residences.

B. Ground floor retail space shall be provided to a depth of at least twenty-five (25) feet from the front facade and shall include an average fourteen (14) foot to zero (0) inch floor-to-ceiling height, with heights above fourteen (14) feet being very desirable.

C. The primary entrance to each street level tenant that does not have its frontage along a public street shall be provided from a pedestrian paseo, courtyard or plaza, which is connected to the public street, creek, or alley.

D. Wall openings, such as storefront windows and doors, shall comprise at least seventy (70) percent of a commercial building's street and creek level facade as seen in Figure 3.2. of the Downtown Design Guide.

E. Clear glass for wall openings, i.e., doors and windows, shall be used along all street-level commercial facades for maximum transparency, especially in conjunction with retail and hotel uses as illustrated in Figure 3.3 of the Downtown Design Guide. Dark tinted, reflective or opaque glazing is not permitted for any required wall opening along commercial street level facades.

F. A building's primary entrance, defined as the entrance which provides the most direct access to a building's main lobby and is kept unlocked during business hours, shall be located on a public street or on a courtyard, plaza or paseo that is connected to and visible from a public street or the San Pedro Creek.

G. At least one building entrance/exit, which may be either a building or tenant and resident entrance, shall be provided along each street frontage.

H. Use clear windows and doors to make the pedestrian level facade highly transparent and accessible. Along retail streets, provide a nearly continuous band of windows. Ensure doorways in glass walls exhibit sufficient contrast to be clearly visible.

I. The facades on downtown commercial streets should be detailed as storefronts, except where the proposed ground floor use is live and work units, residential units or other non-commercial building types as seen in Figure 3.1.10 of the Downtown Design Guide. Where non-residential streets intersect, the ground floor retail space should wrap the corner onto the intersecting streets wherever possible.

J. Residential units with separate entries should include windows or glass doors on the ground floor that look out onto the street.

K. If a residential unit's individual entry along the street is the unit's primary entry, it should be accessible from the sidewalk.

L. More public entrances than the minimum specified by code, including building and or tenant and resident entrances are highly encouraged. Incorporate a pedestrian-oriented scale at the street and river level.

(10) Incorporate a pedestrian-oriented scale at the street and creek level.

A. Awnings and canopies shall be fabricated of woven fabric, glass, metal or other permanent material compatible with the building's architecture

B. Street wall massing, articulation and detail, street level building entrances and storefront windows and doors, as well as the use of quality materials and decorative details should be used to promote pedestrian-scaled architecture along the street.

C. Architectural features that reinforce the retail character of the ground floor street and creek wall and/or help define the pedestrian environment along the sidewalk, such as canopies, awnings, and overhangs, are encouraged and should be integral to the architecture of the building.

D. The design of the ground floors of hotels should exhibit a series of public space and entries that equally welcome the general public as well as guests. The first floor should be as transparent as possible. Hotel uses such as bars, lounges, restaurants, cafes, spas and other uses open to the public should exhibit a direct pedestrian connection from the public right-of-way whenever possible Don't waste valuable street frontage on "back of house" uses.

E. Electrical transformers, mechanical equipment and other equipment should not be located along the ground floor street wall. Electrical transformers, mechanical equipment, other equipment, enclosed stairs, storage spaces, blank walls, and other elements that are not pedestrian-oriented should not be located with one hundred (100) feet of the corner property line as seen in Figure 3.6 of the Downtown Design Guide or visible from public right-of-way.

(11) Street Entrances. Design building entries to be clearly visible from the street as well as to promote pedestrian comfort, safety, orientation and accessibility. In order to increase personal safety, entries and associated open spaces should be designed to avoid the creation of isolated areas and to maintain lines of sight into and out of a space.

A. Reinforce a building's entry with one or more of the following architectural treatments:

i. Extra height lobby space;
ii. Distinctive doorways;
iii. Decorative lighting;
iv. Distinctive entry canopy;
v. Projected or deep recessed entry;
vi. Building name and address integrated into the facade;
vii. Artwork integrated into the facade or sidewalk;
viii. A change in paving material, texture, or color within the property line;
ix. Distinctive landscaping, including plants, water features and seating.

B. The primary street entrance of single buildings will be off the public sidewalk in RIO-7a, RIO-7b, and RIO-7c as seen in Figure 7.7 of the Downtown Design Guide.

i. In RIO-7d and RIO-7e, entrances may be off of a walkway connected to both the public sidewalk and the parking area as shown if Figure 673-1.

ii. In projects with multiple buildings arranged on one site, building entrances may be off of pedestrian paths connecting streets with the creek or courtyards and plazas within a site similar to Figure 672-2.

C. Strong colors should emphasize architectural details and entrances.

D. Deep recessed entries into the building are encouraged. (12) Creek Side Facade and Entrances. The Creekside of buildings should be responsive to the park-side of an urban building. Materials may be less formal, trellises and pergolas may be used in place of more traditional street side canopies and formal entries.

FINDINGS:

a. The applicant is requesting a Certificate of Appropriateness for approval to construct an addition to the existing building and expand the existing parking lot to the east to the vacant lot at 108/110 Ira.
b. EXISTING CONDITION – The site at 3020 Broadway currently features a vacant retail structure located at the southeast corner of the lot. The lot features two curb cuts on Broadway as well as two additional curb cuts on Ira Avenue. The existing lot at 108/110 Ira is currently vacant and does not feature a curb cut.
c. PEDESTRIAN CIRCULATION – Per the UDC Section 35-672(a) in regards to pedestrian circulation, an applicant shall provide pedestrian access among properties to integrate neighborhoods. The applicant has proposed to provide pedestrian circulation adjacent to the public right of way on both Broadway and Ira, as it currently exists.
d. EXISTING CURB CUTS – The lot currently features four (4) curb cuts, two of which are located adjacent to the intersection of Broadway and Ira. These curb cuts interrupt pedestrian traffic and staff finds that they should be eliminated. The UDC Section 35-672(b)(1) notes that curb cuts should be limited to two (2) for structures facing only one street and one (1) for each additional street face. Given the size of this lot, staff finds that one curb cut per each street is sufficient.
e. SITE DESIGN – According to the UDC Section 35-673, buildings should be sited to help define active spaces for area users, provide pedestrian connections between sites, help animate the street scene and define street edges. Primary entrances should be oriented toward the street and shall be distinguishable by an architectural feature. While the applicant has not proposed a new structure, the applicant has proposed to modify the existing structure to include a new storefront system which addresses Broadway. Staff finds this to be appropriate and consistent with the Guidelines.
f. SITE DESIGN (Parking lot) – The applicant has proposed to maintain the existing parking lot at 3020 Broadway, and to create additional parking at the rear of the structure on the vacant lot at 108/110 Ira. This would locate parking at the rear of the lot at 3020 Broadway, but would also situate parking adjacent to a residential structure. Staff finds that the applicant should incorporate buffering elements on both the east and north sides of the property to buffer vehicles from both the residential use, and pedestrian traffic on Ira. Buffering elements include low fences and landscaping elements such as planting beds and shrubbery.
g. LANDSCAPING – The UDC Section 35-673(3) provides information regarding landscape design. At this time, the applicant has not provided a detailed landscaping plan. Staff finds that the applicant should make every attempt to install landscaping elements to provide a buffer between on-site automobile parking and pedestrian traffic on sidewalks at the public right of way.
h. MECHANICAL & SERVICE EQUIPMENT – The UDC Section 35-673(n) addresses service areas and mechanical equipment and their impact on the public. Service areas and mechanical equipment should be visually

unobtrusive and should be integrated with the design of the site and building. Noise generated from mechanical equipment shall not exceed city noise regulations. The applicant shall screen all mechanical areas from view at the public right of way and shall comply with city noise regulations.

i. BUILDING SCALE – According to the UDC Section 35-674(b) a building shall appear to have a "human scale". To comply with this, a building must (1) express façade components in ways that will help to establish building scale, (2) align horizontal building elements with others in the blockface to establish building scale, (3) express the distinction between upper and lower levels, (4) in this instance, divide the façade of the building into modules that express traditional and (5) organize the mass of a building to provide solar access to the river. The applicant has proposed to modify the existing structure to feature a storefront system with elements on the north, south and west facades that relate to the human scale. Additionally, the applicant has proposed to install an entrance canopy to accompany the proposed storefront system. Staff finds this to be appropriate and consistent with the UDC.

j. MATERIALS – In regards to materials and finishes, the UDC Section 35-674(d)(1) states that indigenous materials and traditional building materials should be used for primary wall surfaces. A minimum of seventy-five (75) percent of walls (excluding window fenestrations) shall be composed of the flowing: Modular masonry materials including brick, stone, and rusticated masonry block, tile, terra-cotta, and structural clay tile and cast stone. The applicant has proposed materials that include aluminum framed storefront system, painting of the existing exterior walls and a metal canopy. Staff finds this to be appropriate and consistent with the UDC.

k. SIGNAGE – The applicant has noted on the proposed construction documents the installation of signage. On three facades of the structure. The UDC Section 35-678 (e) notes that applicants may apply for up to three (3) signs total for a total of fifty (50) square feet. Additional square footage and signs may be approved by the Commission based on square dotage and the size and scope of the site. Staff finds the proposed amount of signage to be inconsistent with the UDC. Staff finds that signage should not exceed more than fifty (50) square feet and should not feature more than one primary and two secondary signs.

l. SIGNAGE (Existing Pole Sign) – This lot features an existing pole sign which features the frame of an existing cabinet sign, and should be removed. Staff finds that a monument sign would be appropriate and consistent with the UDC as opposed to an existing pole sign.

m.

RECOMMENDATION:

Staff recommends approval of the proposed modifications and site work with the following stipulations:

i. That the two curb cuts immediately adjacent to the intersection of Broadway and Ira be eliminated based on finding d.

ii. That the applicant submit a detailed landscaping plan to staff for review and approval that includes landscaping elements in each of the existing landscape islands and buffers found on site as well as automobile screening for the lot at 108/110 Ira, as noted in findings f and g.

iii. That the applicant submit a detailed signage package for review and approval by the Commission that does not feature more than three signs that total fifty (50) square feet, and that the existing pole sign is removed as noted in finding k.

iv. That the applicant screen and buffer all mechanical equipment from view at the public right of way as noted in finding h.


3020 Broadway St
Broadway St
Planet K


Ira Ave
TX-368 Loop
Sprint


©2019 Google

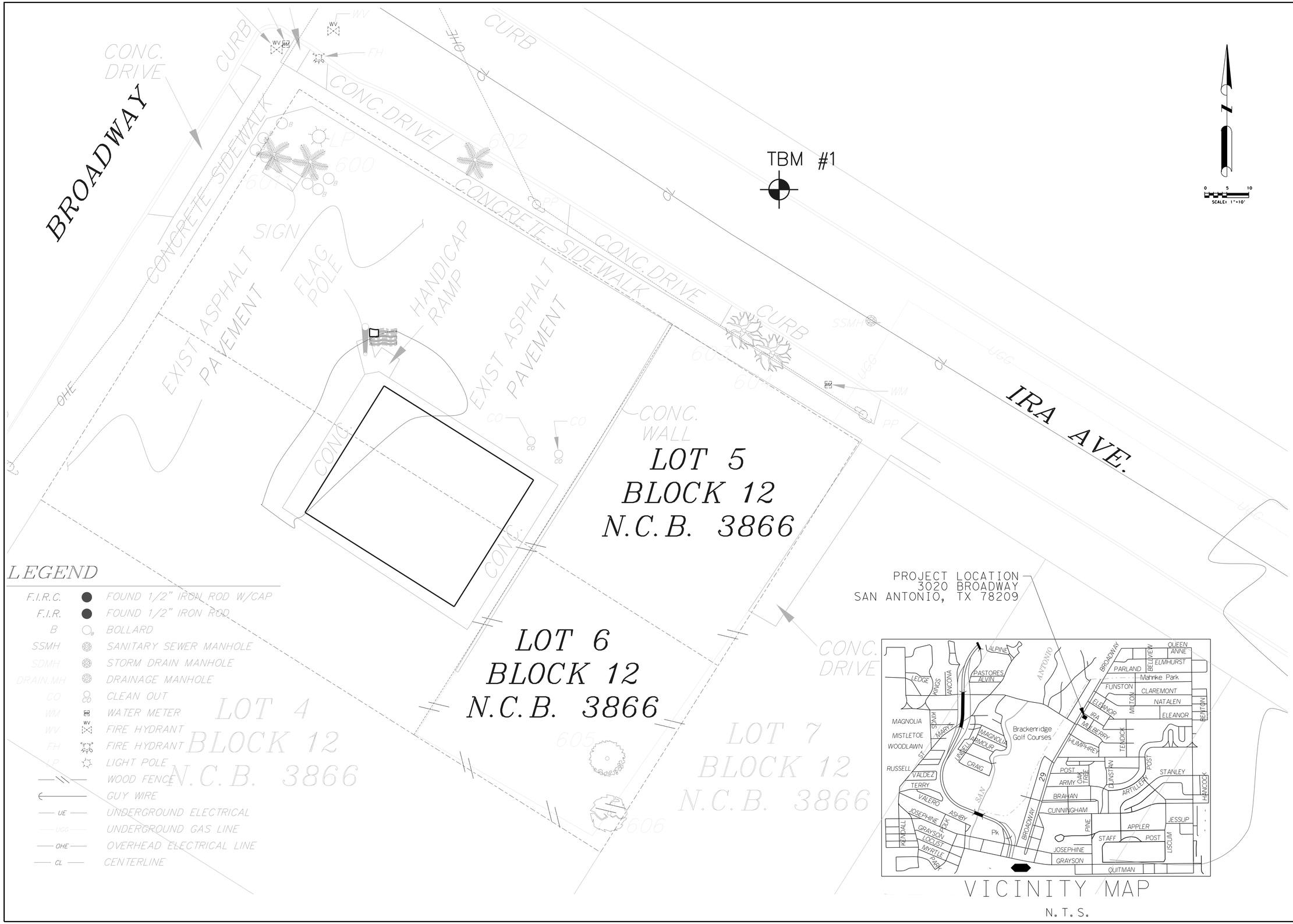

STATE OF TEXAS
LUIS A. RODRIGUEZ
116978
LICENSED PROFESSIONAL ENGINEER

MR CIVIL, LLC
TBPE FIRM REGISTRATION.: F-19896
17806 W IH 10, Ste 300
San Antonio, Tx 78257

EXISTING SITE PLAN
PARKING LOT EXPANSIOIN
3020 BROADWAY
SAN ANTONIO, TX 78209

1

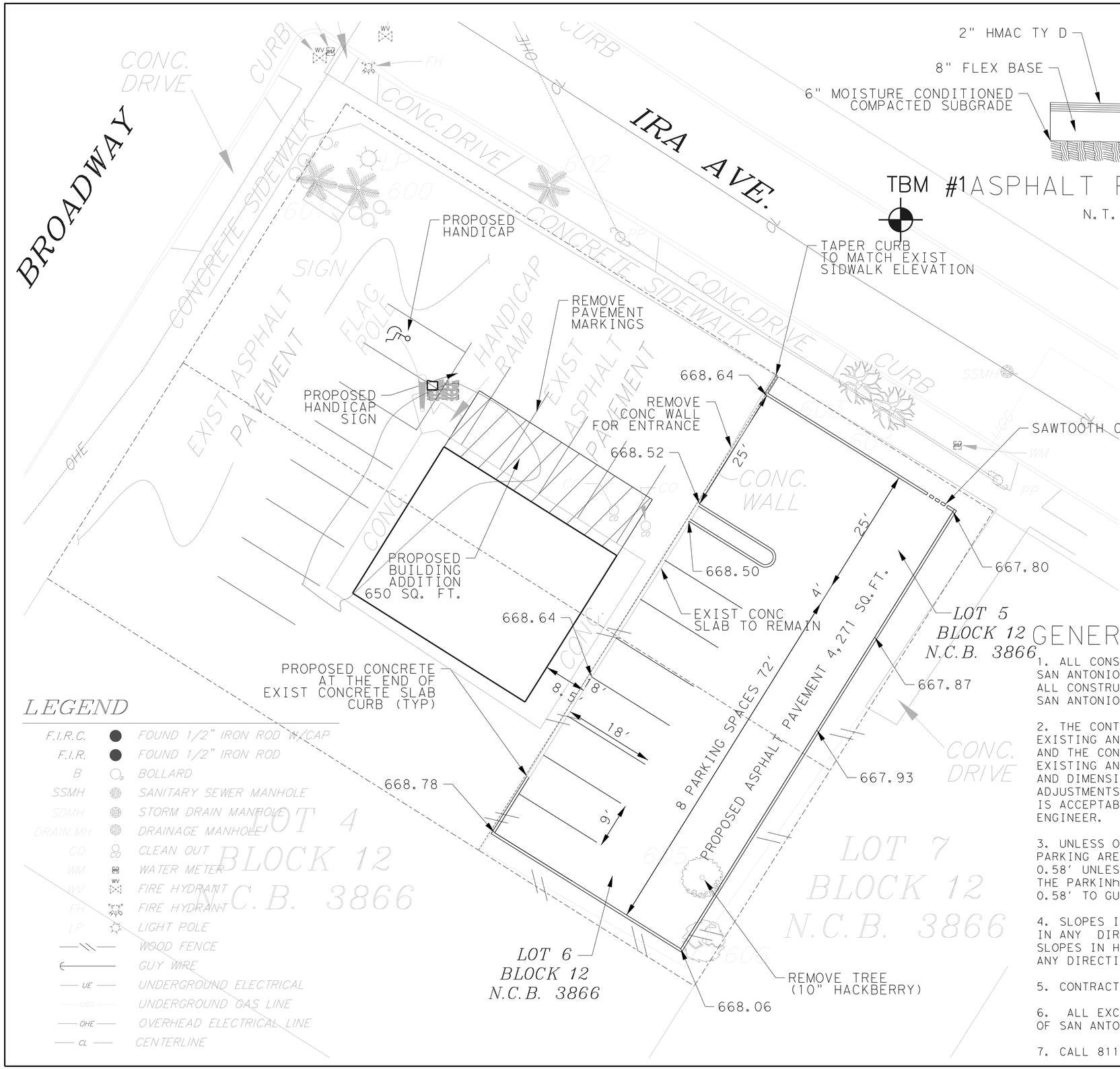

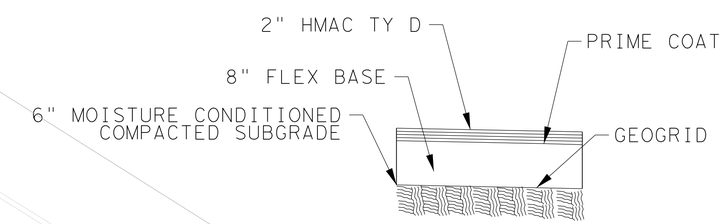

TBM #1

ASPHALT PAVEMENT

N.T.S.

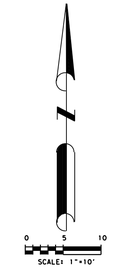

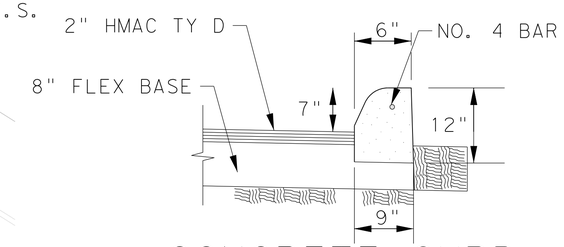

CONCRETE CURB

N.T.S.

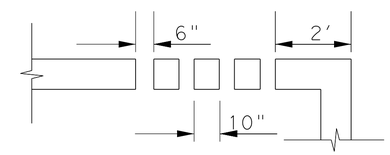

SAWTOOTH CURB

N.T.S.

GENERAL SITE NOTES

1. ALL CONSTRUCTION SHALL CONFORM TO THE LATEST CITY OF SAN ANTONIO STANDARD SPECIFICATIONS FOR CONSTRUCTION. ALL CONSTRUCTION SHALL CONFORM TO THE LATEST CITY OF SAN ANTONIO STANDARD SPECIFICATIONS FOR CONSTRUCTION.

2. THE CONTRACTOR SHALL VERIFY THE SUITABILITY OF ALL EXISTING AND PROPOSED SITE CONDITIONS INCLUDING GRADES AND THE CONTRACTOR SHALL VERIFY THE SUITABILITY OF ALL EXISTING AND PROPOSED SITE CONDITIONS INCLUDING GRADES AND DIMENSIONS BEFORE COMMENCEMENT OF CONSTRUCTION. MINOR ADJUSTMENTS TO FINISH GRADE TO ACCOMPLISH SPOT DRAINAGE IS ACCEPTABLE, IF NECESSARY, UPON PRIOR APPROVAL BY THE ENGINEER.

3. UNLESS OTHERWISE NOTED, ALL SPOT GRADES SHOWN IN THE PARKING AREAS ARE GRADE ELEVATIONS AT THE GUTTER. ADD 0.58′ UNLESS OTHERWISE NOTED, ALL SPOT GRADES SHOWN IN THE PARKINh AREAS ARE GRADE ELEVATIONS AT THE GUTTER. ADD 0.58′ TO GUTTER FOR TOP OF CURB ELEVATIONS.

4. SLOPES IN HANDICAP PARKING AREAS SHALL NOT EXCEED 2.0% IN ANY DIRECTION AND MUST COMPLY WITH ALL ADA GUIDELINES. SLOPES IN HANDICAP PARKING AREAS SHALL NOT EXCEED 2.0% IN ANY DIRECTION AND MUST COMPLY WITH ALL ADA GUIDELINES.

5. CONTRACTOR TO MEET EXISTING GRADES AT PERIMETER OF PROJECT

6. ALL EXCAVATION NEAR TREES WILL COMPLY WITH THE LATEST CITY OF SAN ANTONIO TREE ORDINANCE.

7. CALL 811 BEFORE DIGGING OCCURS TO LOCATE UTILITES.

STATE OF TEXAS
LUIS A. RODRIGUEZ
116978
LICENSED PROFESSIONAL ENGINEER

MR CIVIL, LLC
TBPE FIRM REGISTRATION.: F-19896
17806 W IH 10, Ste 300
San Antonio, Tx 78257

DIMENSION AND GRADING PLAN
PARKING LOT EXPANSIOIN
3020 BROADWAY
SAN ANTONIO, TX 78209

TREE TABLE		
NO.	CALIPER (IN)	DESCRIPTION
600	18	SAGE PALM
601	20	SAGE PALM
602	35	SAGE PALM
603	19	PECAN
604	25	PECAN
605	12	HACKBERRY
606	6	CREPEMYRTLE

STATE OF TEXAS
LUIS A. RODRIGUEZ
116978
LICENSED PROFESSIONAL ENGINEER

MR CIVIL, LLC
TBPE FIRM REGISTRATION.: F-19896
17806 W IH 10, Ste 300
San Antonio, Tx 78257

TREE SURVEY
PARKING LOT EXPANSIOIN
3020 BROADWAY
SAN ANTONIO, TX 78209

at&t
Your world. Delivered.

AT&T

3020 BROADWAY ST.
SAN ANTONIO, TX 78209

DRAWING INDEX

ARCHITECTURAL / MEP PLANS

STRUCTURAL ENGINEERING PLANS

PROJECT INFORMATION

SCOPE OF WORK:

ADDITION TO EXISTING BUILDING INCLUDING NEW INTERIOR FINISH OUT. CONTRACTOR TO BUILD NEW LOAD BEARING WALLS & NON-LOAD BEARING WALLS, NEW ROOF, JOIST & RAFTERS, CEILINGS, ELECTRICAL, PLUMBING, & HVAC WORK PER PLANS.

CODE INFORMATION

COMPLY WITH GOVERNING CODES:
2018 IBC CODE WITH LOCAL AMENDMENTS
2018 INTERNATIONAL FIRE CODE
2018 INTERNATIONAL PLUMBING CODE
2017 INTERNATIONAL ELECTRICAL CODE
2018 INTERNATIONAL MECHANICAL CODE
2018 INTERNATIONAL ENERGY CONSERVATION CODE
2018 INTERNATIONAL FUEL GAS CODE
TEXAS ACCESSIBILITY STANDARDS

OCCUPANCY GROUP CLASSIFICATION: "M"

OCCUPANCY AREA	SQFT	OCCUPANCY TOTALS
SALES AREA 101	1,219	1,219 / 30 S.F. = 40.6
HALLWAY 102	74	74 / 300 S.F. = 1.0
RESTROOM 103 & 104	101	101 / 300 S.F. = 1.0
STORAGE 105	110	110 / 300 S.F. = 1.0
BACK OF HOUSE 106	326	326 / 300 S.F. = 1.8
TOTAL ALLOWABLE SQFT = 1,830		
TOTAL OCCUPANCY LOAD = 45.4		

PROJECT DIRECTORY

LAND LORD/OWNER:
OPTIMUM WIRELESS
SKYLER COZBEY
PH: 918-378-5140

GENERAL CONTRACTOR:
Moffett Construction
1535 American Way
Cedar Hill, TX 75104
PH: 972-504-2274

TENANT:
AT&T OPTIMUM WIRELESS
SKYLER COZBEY
PH: 918-378-5140

PLAN DESIGN
Moffett Construction
1535 American Way
Cedar Hill, TX 75104
972-504-2274

M.E.P. ENGINEER
Michael Lindsay
225 Trinity Dr
Lancaster, TX 75146
214-213-3947

DGA CONSULTING ENG.
Donal Green
P.O. Box 852697
Mesquite, TX 75185
214-356-0797

M.E.P. REQUIREMENTS

MECHANICAL: NEW HVAV RTU SYSTEM WITH NEW INTERIOR DUCTOWRK, DIFFUSERS & T-STAT. COMPLETE TURNKEY HVAC SYSTEM.

ELECTRICAL: PROVIDE A COMPLETE WORKING ELECTRICAL SYSTEM PER PLANS. NEW ENTRY SERVICE, INTERIOR PANEL, OUTLETS, SWITCHES, J-BOXES, ETC.

PLUMBING: PROVIDE AND INSTALL ALL NECESSARY PLUMBING DEVICES, AND CONNECTIONS AS REQUIRED. PROVIDE NEW TOILET, SINK, AND ALL FIXTURES PER PLANS. MAKE FINAL CONNECTIONS.

FIRE SPRINKLERS & ALARM: NO SCOPE

SATELLITE MAP

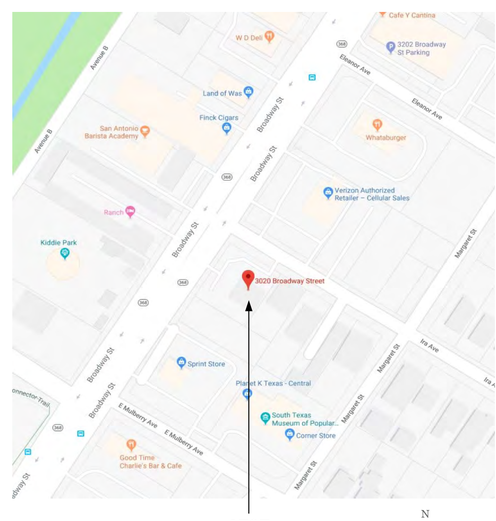

AT&T LOCATION

N

LOCATION MAP

AT&T LOCATION

N

Designed By:
Moffett Construction
1535 American Way
Cedar Hill, TX 76001

PROJECT:
3020 BROADWAY ST
SAN ANTONIO, TX 78209

ISSUE:
4-26-19

COVER PAGE

CO

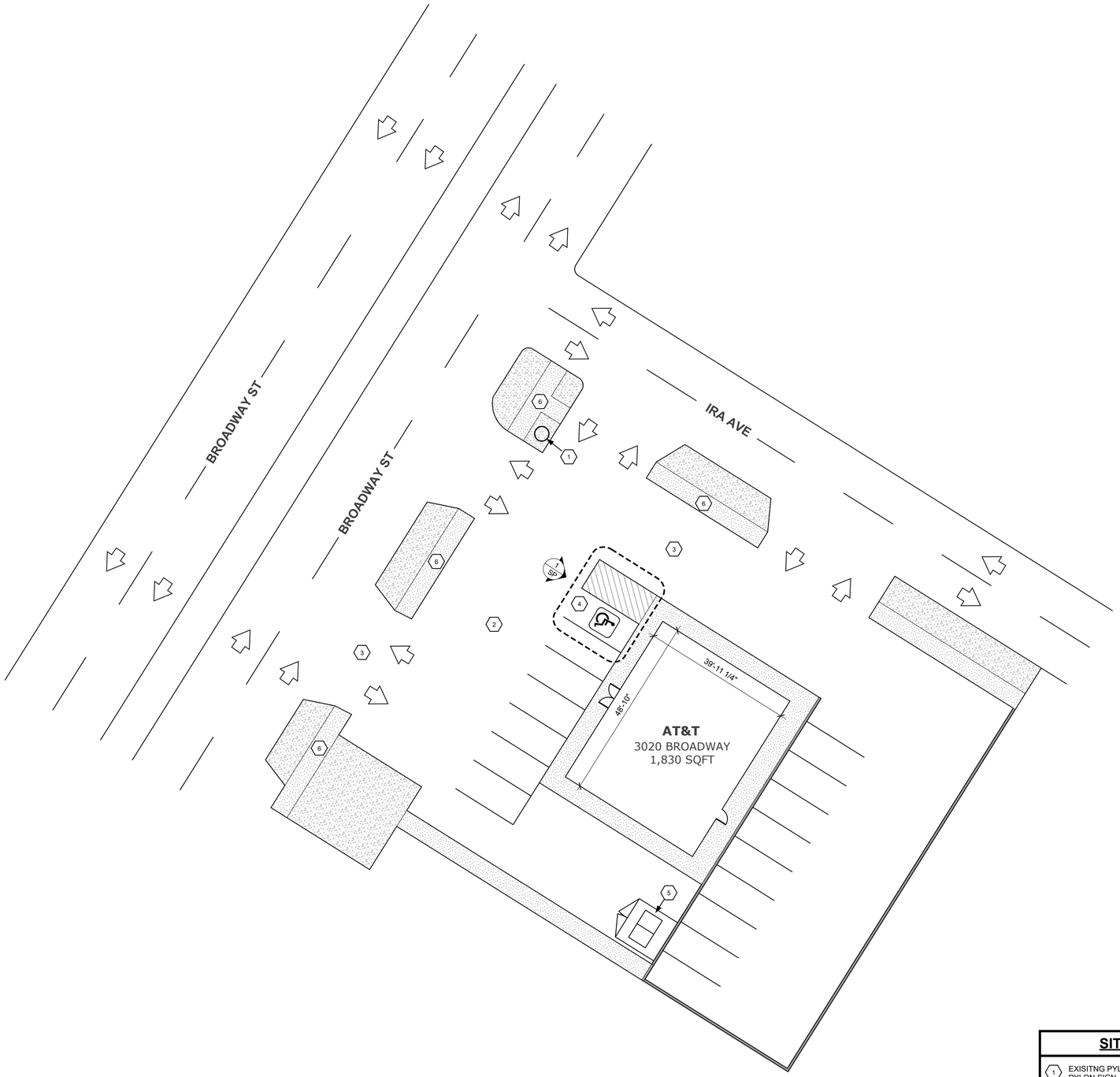

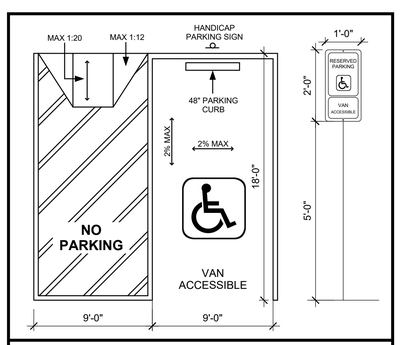

1 **ADA PARKING DETAIL** N.T.S.

SP **SCALE : 1" = 15'**
SITE PLAN

N

SITE PLAN KEY NOTES

1. EXISITNG PYLON TO BE REWORKED BY TENANT WITH NEW PYLON SIGN. SIGN TO BE UNDER SEPERATE PERMIT BY SIGN VENDOR.
2. EXISTING PARKING LOT.
3. EXISTING DRIVE WAY.
4. NEW ADA PARKING AND ADA RAMP.
5. EXISTING DUMPSTER ENCLOSURE.
6. EXISTING SIDEWALK.

Designed By:
Moffett Construction
1535 American Way
Cedar Hill, TX 76001

PROJECT:
3020 BROADWAY ST
SAN ANTONIO, TX 78209

ISSUE:
4-26-19

SITE PLAN

SP

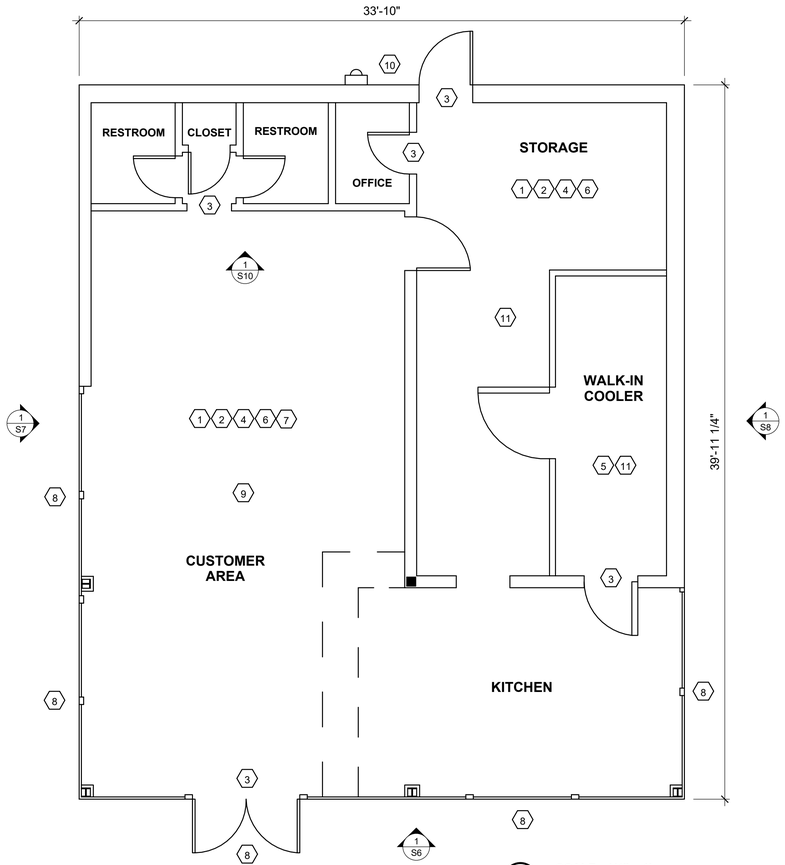

A1 SCALE : 1/4" = 1'
DEMO PLAN

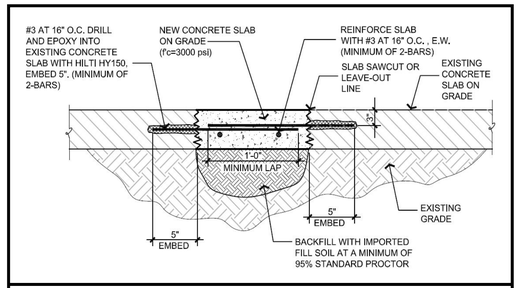

1 **SLAB INFILL DETAIL**

N.T.S.

DEMO PLAN KEY NOTES

1. REMOVE ALL EXISTING FURNITURE & CASEWORK WITHIN DEMOLITION AREAS.
2. REMOVE EXISTING PARTITIONS & WALL BASE.
3. REMOVE ALL EXISTING DOORS & FRAMES SHOWN.
4. REMOVE EXISTING FLOOR FINISHES.
5. REMOVE EXISTING COOLER DOORS & WALLS.
6. REMOVE ALL EXISTING PLUMBING FIXTURES & CAP LINES NOT USED IN NEW LAYOUT.
7. REMOVE ALL FURNITURE & MILWORK THROUGHOUT.
8. REMOVE ALL STORE-FRONT GLASS & DOUBLE STORE-FRONT DOORS TO PREP FOR NEW.
9. SEE STRUCTUAL PLAN S9 FOR ROOF DEMO DETAILS.
10. REMOVE EXISTING ELECTRICAL METER, DISCONNECT, GUTTER & PREP FOR NEW PER E1-E3.
11. RAISED CONCRETE PAD IN KITCHEN / WALK-IN COOLER AREA TO BE REMOVED & BROUGHT TO A LEVEL CONCRETE SLAB TO MATCH NEW FOUNDATION.

DEMO GENERAL NOTES

A. CONTRACTOR TO VERIFY ALL DIMENSIONS & EXISTING CONDUITIONS PRIOR TO START OF WORK & SHALL NOTIFY OWNER OF ANY CHANGES.

B. CONTRACTOR SHALL REFER TO STRUCTUAL PLANS FOR DEMO OF LOAD BEARING WALLS & ROOF JOIST.

C. WHERE DEMOLITION OCCURS ADJACENT TO EXISTING TO REMAIN. PATCH & REPAIR ADJACENT CONTITIONS FOR A UNIFORM APPEARANCE.

D. COORDINATE ALL DEMO AREAS WITH NEW FLOOR PLAN.

E. COORDINATE ALL DEMO AREAS WITH NEW REFLECTED CEILING PLAN.

F. REMOVE FLOORING & BASE AT DEMO AREAS.

DEMO PLAN KEY LEGEND

- EXISTING WALLS
- DEMO WALLS
- DEMO DOORS
- EXISTING DOORS (E)
- WINDOW
- ELECTRICAL PANEL

Designed By:
Moffett Construction
1535 American Way
Cedar Hill, TX 76001

PROJECT:
3020 BROADWAY ST
SAN ANTONIO, TX 78209

ISSUE:
4-26-19

DEMO PLAN

A1

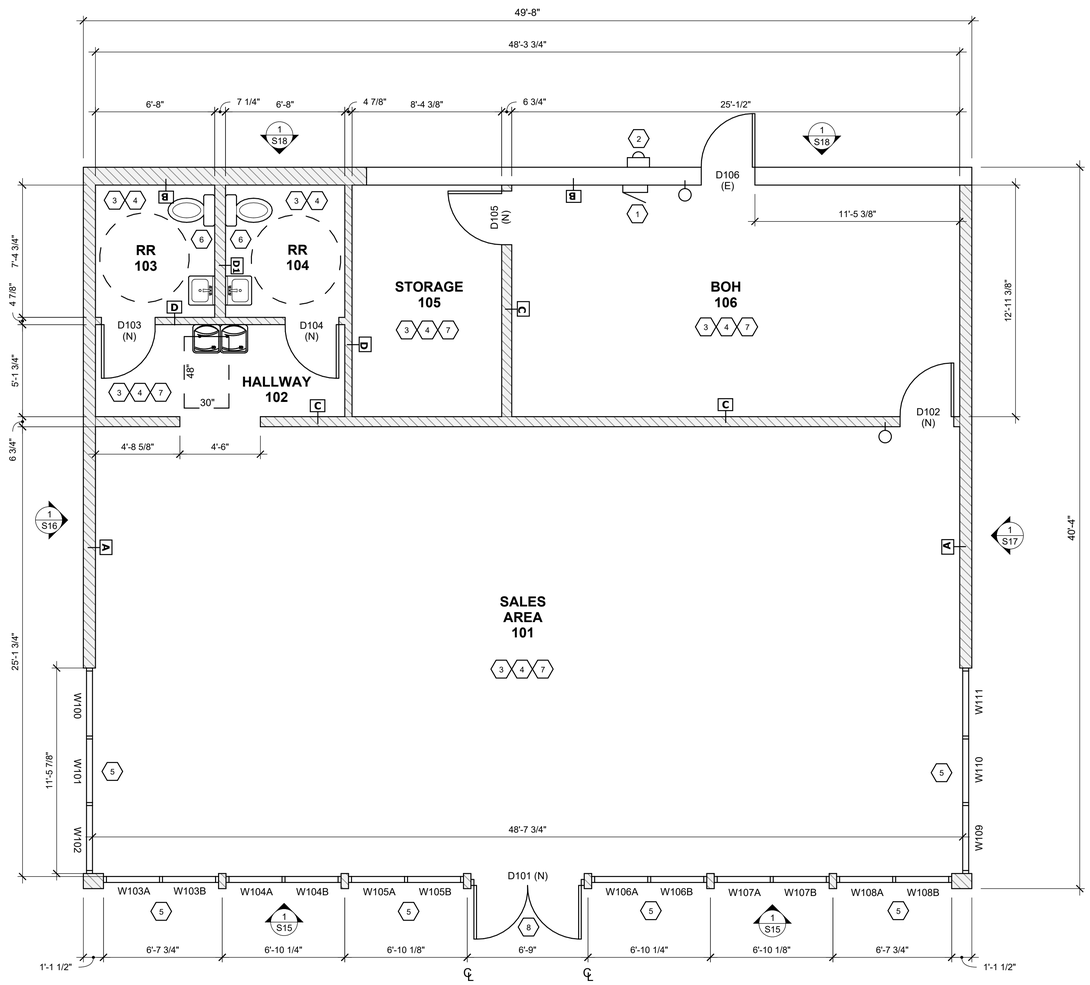

A2 SCALE : 1/4" = 1'
FLOOR PLAN

ROOM FINISH SCHEDULE

ROOM	FLOORS	FL BASE	CEILINGS	WALLS
101 SALES AREA	CPT-2 CPT-4	RB-1	ACP-2	PT-1 PT-5
102 HALLWAY	VCT-2	RB-1	ACP-2	PT-1
103 RESTROOM	VCT-1	RB-1	ACP-1	PT-5 FRP-1
104 RESTROOM	VCT-1	RB-1	ACP-1	PT-5 FRP-1
105 STORAGE	VCT-1	RB-1	ACP-1	PT-5
106 BACK OF HOUSE	VCT-1	RB-1	ACP-1	PT-5

FINISH LEGEND

ITEM	DESCRIPTION
ACP-1	USG RADAR CLIMAPLUS #2410 / EDGE: SQUARE / SIZE: 2X4 / COLOR: WHITE GRID: DOWN DX 15/16" / COLOR: FLAT WHITE
ACP-2	USG: ASTRO-SLT-EDGE / SIZE: 2' X 2' / COLOR: WHITE / GRID: 15/16" DONN DX / COLOR: FLAT WHITE /
CPT-4	MFR: SHAW CARPET / STYLE: AT&T 800Y7 /STEP FORWARD / COLOR: STERLING #31557 / SIZE: 2' X 2' / 1/4" TURN / WALK OFF MAT, ENTRY
CPT-2	MFR: SHAW CARPET / STYLE: CONNECT SQUARE / COLOR: WIRELESS SIZE: 2' X 2' / MONOLITHIC
PT-1	BENJAMIN MOORE / DEEP SPACE #2121-20 / EGGSHELL ON GYP WALLS
PT-5	BENJAMIN MOORE / HORIZON #OC-53 / EGGSHELL ON GYP WALLS
RB-1	SHAW COVE BASE / COLOR: SLATE 00580 / SIZE: 4" HIGH
FRP-1	PARKLAND PERFORMANCE #FRP0130P / COLOR: BRIGHT WHITE SMOOTH SIZE 4' X 8'
VCT-1	ARMSTRONG IMPERIAL TEXTURE #51904 / COLOR: STERLING / SIZE: 12"X12" BOH & RR FLOORING

DOOR FINISH SCHEDULE

DOOR	DESCRIPTION	FRAME	HARDWARE
D101	NEW EXTERIOR 6'-0" X 7'-0" DOUBLE STORE-FRONT DOOR	ALMN	HWG-3
D102	NEW INTERIOR 3'-0" X 7'-0" SOLID CORE WOOD DOOR	HM	HWG-4
D103	NEW INTERIOR 3'-0" X 7'-0" SOLID CORE WOOD DOOR	HM	HWG-1
D104	NEW INTERIOR 3'-0" X 7'-0" SOLID CORE WOOD DOOR	HM	HWG-1
D105	NEW INTERIOR 3'-0" X 7'-0" SOLID CORE WOOD DOOR	HM	HWG-4
D106	EXISTING EXTERIOR 3'-0" X 7'-0" HM DOOR & FRAME	HM	HWG-2

DOOR HARDWARE SCHEDULE

GROUP	DESCRIPTION
HWG 1	1 PRIVACY (ALC20-US26D BRUSHED CHROME), 1 DOOR CLOSER, 1KICK PLATE
HWG 2	1 PUSH / PULL BAR / LOCKSET / CLOSER / PANIC BAR
HWG 3	1 LOCKSET W/ INT THUMB LATCH & INDICATOR / 1 CLOSER / PULL/PUSH BAR
HWG 4	1 LOCKSET (BRUSHED CHROME) / 1 CLOSER / 1 KICK PLATE

WINDOW FINISH SCHEDULE

WINDOW	DESCRIPTION
W100	NEW STOREFRONT WINDOW (3'-7" X 8'-7" / ALUM FRAME / INSULATED
W101	NEW STOREFRONT WINDOW (3'-7" X 8'-7" / ALUM FRAME / INSULATED
W102	NEW STOREFRONT WINDOW (3'-7" X 8'-7" / ALUM FRAME / INSULATED
W103 A&B	NEW STOREFRONT WINDOW (3'-0" X 8'-7" / ALUM FRAME / INSULATED
W104 A&B	NEW STOREFRONT WINDOW (3'-0" X 8'-7" / ALUM FRAME / INSULATED
W105 A&B	NEW STOREFRONT WINDOW (3'-0" X 8'-7" / ALUM FRAME / INSULATED
W106 A&B	NEW STOREFRONT WINDOW (3'-0" X 8'-7" / ALUM FRAME / INSULATED
W107 A&B	NEW STOREFRONT WINDOW (3'-0" X 8'-7" / ALUM FRAME / INSULATED
W108 A&B	NEW STOREFRONT WINDOW (3'-0" X 8'-7" / ALUM FRAME / INSULATED
W109	NEW STOREFRONT WINDOW (3'-7" X 8'-7" / ALUM FRAME / INSULATED
W110	NEW STOREFRONT WINDOW (3'-7" X 8'-7" / ALUM FRAME / INSULATED
W111	NEW STOREFRONT WINDOW (3'-7" X 8'-7" / ALUM FRAME / INSULATED

FLOOR PLAN KEY NOTES

1. NEW 200 AMP ELECTRICAL PANEL "A".
2. NEW 200 AMP METER BASE & DISCONNECT.
3. FLOORING TO BE PREPED AND READY FOR NEW VCT / CARPET. SEE FINISH SCHEDULE FOR DETAILS.
4. NEW 2X4 & 2X2 CEILING GRID & TILES THROUGHOUT. SEE RCP FOR CEILING HEIGHTS AND SCHEDULE.
5. NEW STORE-FRONT GLASS & FRAME. SEE WINDOW SCHEDULE FOR DETAILS.
6. INSTALL FRP 4'-0" FROM FINISH FLOOR & PAINT ABOVE FRP IN RESTROOM.
7. WALLS TO BE TAPED-BED & PAINTED. SEE FINISH SCHEDULE.
8. NEW STORE-FRONT DOUBLE GLASS DOORS. SEE DOOR SCHEDULE.
9. SEE STRUCTUAL PLANS FOR EXTERIOR & INTERIOR WALL & ROOF DETAILS.
10.

FLOOR PLAN KEY LEGEND

- EXISTING WALLS
- NEW WALLS
- ELECTRIC PANEL
- FIRE EXTINGUISHERS
- PATH OF EGRESS TRAVEL
- EMERGENCY EGRESS LIGHTING (MIN 90 MIN)
- (N) NEW DOORS
- (E) EXISTING DOORS
- B WALL PARTITION TYPE
- EMERGENCY EXIT LIGHT COMBO (MIN 90 MIN)

MOFFETT CONSTRUCTION

Designed By:
Moffett Construction
1535 American Way
Cedar Hill, TX 76001

PROJECT:
3020 BROADWAY ST
SAN ANTONIO, TX 78209

ISSUE:
4-26-19

FLOOR PLAN

A2

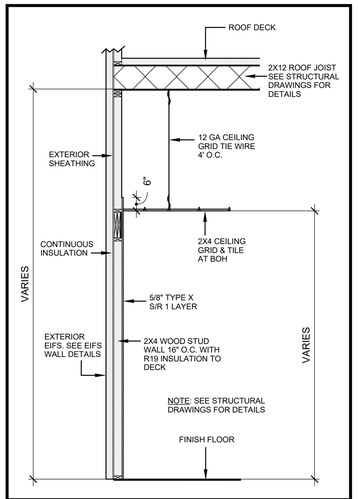

PARTITION TYPE B

N.T.S.

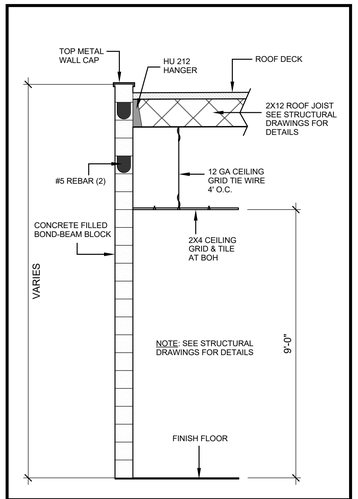

PARTITION TYPE B

N.T.S.

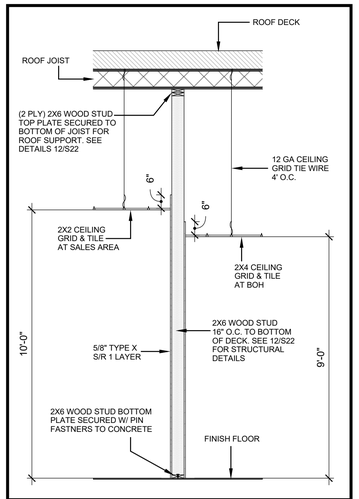

PARTITION TYPE C

N.T.S.

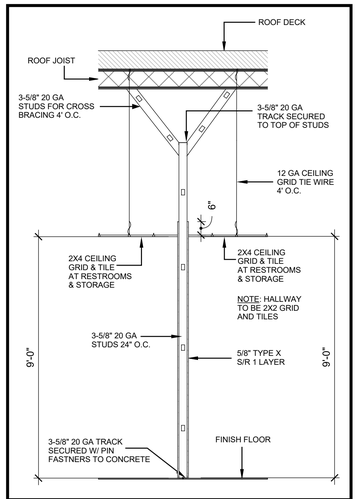

PARTITION TYPE D

N.T.S.

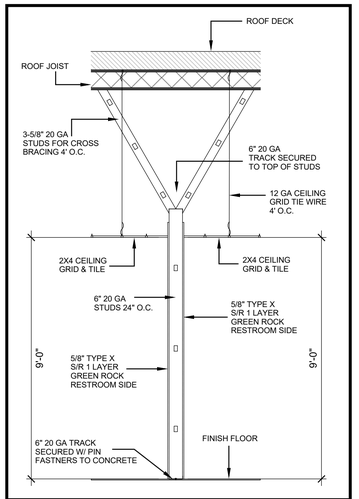

PARTITION TYPE D1

N.T.S.

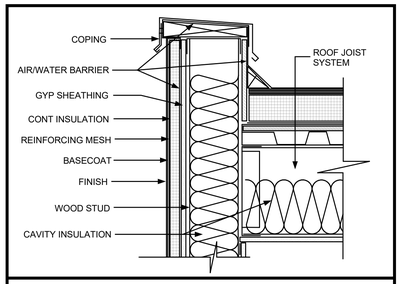

EIFS PARAPET DETAIL

N.T.S.

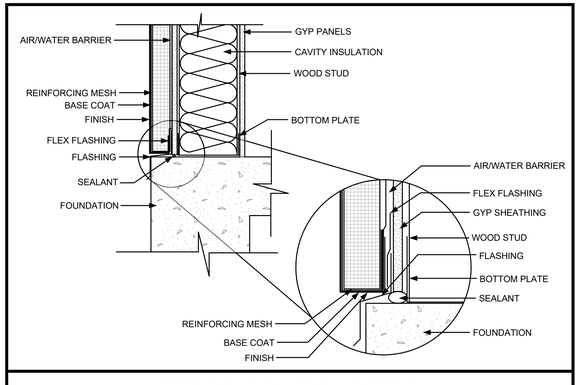

EIFS FOUNDATION DETAIL

N.T.S.

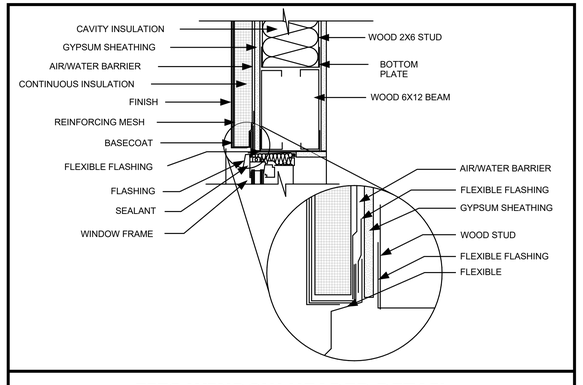

EIFS WINDOW HEADER DETAIL

N.T.S.

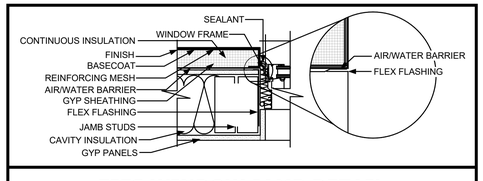

EIFS WINDOW JAMB DETAIL

N.T.S.

Designed By:
Moffett Construction
1535 American Way
Cedar Hill, TX 76001

PROJECT:
3020 BROADWAY ST
SAN ANTONIO, TX 78209

ISSUE:
4-26-19

PARTITION DETAILS

A2.1

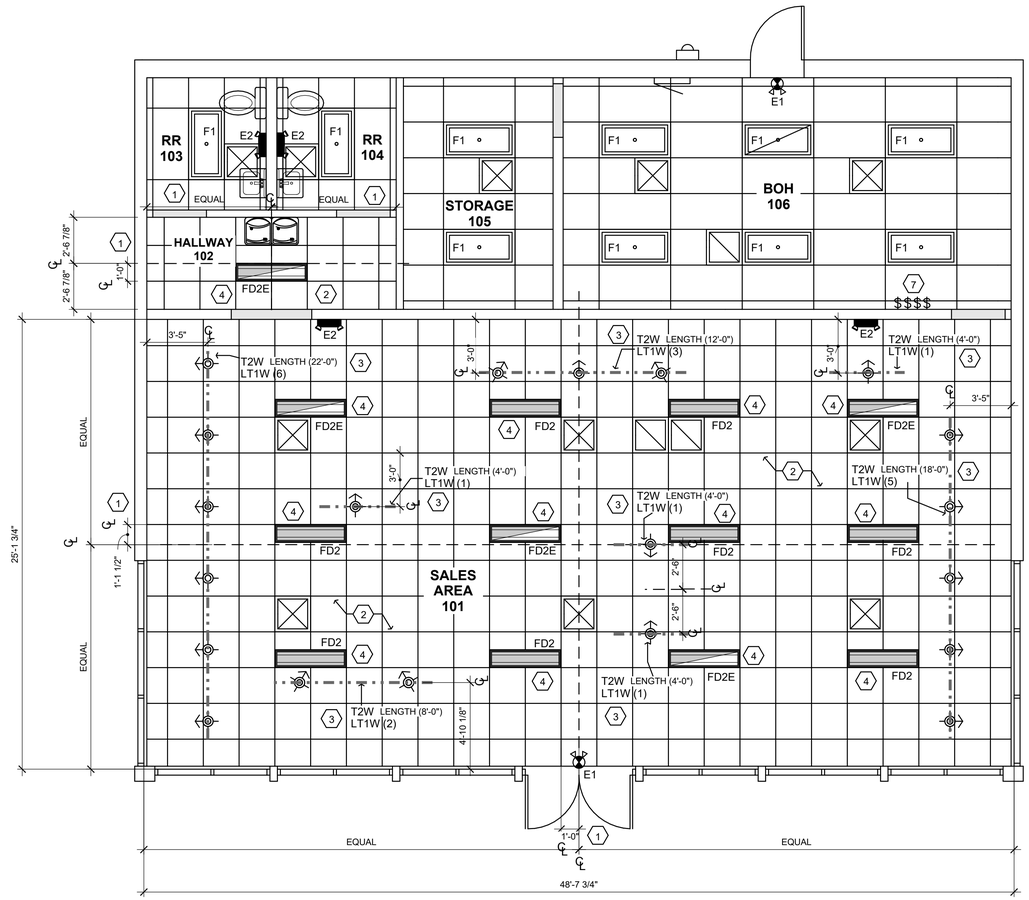

A3 SCALE : 1/4" = 1'
R.C.P.

CEILING HEIGHT SCHEDULE

ROOM	CEILING TYPE	CEILING HEIGHT
101 SALES AREA	APC-2	10' - 0"
102 HALLWAY	APC-2	9' - 0"
103 RR	APC-1	9' - 0"
104 RR	APC-1	9' - 0"
105 STORAGE	APC-1	9' - 0"
106 BACK OF HOUSE	APC-1	9' - 0"

REFLECTED CEILING PLAN GENERAL NOTES

1. CENTERLINES ARE USED TO LAY OUT SUSPENDED CEILING SYSTEM, LIGHT FIXTURES, POWER/DATA OUTLETS AND SALES AREA FIXTURES. CONTRACTOR IS TO MARK AND VERIFY ALL CENTERLINES SHOWN ON THESE DRAWINGS PRIOR TO START OF CONSTRUCTION.
2. ALL AIR SUPPLY AND RETURN DIFFUSERS IN THE SALES AREA SHALL BE STANDARD FINISH #26-WHITE TO MATCH CEILINGS.
3. EMERGENCY AND EXIT LIGHT FIXTURES ARE SHOWN FOR REFERENCE ONLY. IT IS THE ARCHITECT AND/OR ENGINEER OF RECORD'S RESPONSIBILITY TO VERIFY LOCATIONS AND QUANTITIES PER LOCAL CODE REQUIREMENTS.
4. AUTHORIZED RETAILER IS RESPONSIBLE TO CONFIRM FINAL CEILING HEIGHT WITH AT&T PRIOR TO ORDERING FIXTURES, TO DETERMINE HEIGHT OF WALL BAY.
   - FOR CEILING HEIGHT 10'-0" A.F.F. AND HIGHER - USE PROTOTYPICAL WALL FIXTURES
   - FOR CEILING HEIGHT 9'-4" TO 9'-11" A.F.F. - USE SHORT WALL FIXTURES
   - FOR CEILING HEIGHT 7'-8" TO 9'-3" - USE EXTRA SHORT WALL FIXTURES
5. IF A NEW FIRE SPRINKLER SYSTEM IS REQUIRED, OR THE EXISTING SYSTEM NEEDS TO BE MODIFIED, THE FOLLOWING SPECIFICATIONS SHALL BE USED FOR ALL SPRINKLER HEADS LOCATED WITHIN THE SALES AREA:
   - VIKING HORIZON; MODEL: MIRAGE VK 332; FLUSH CONCEALED; ESCUTCHEON & CAP FINISHES: WHITE AT SALES AREA CEILINGS.

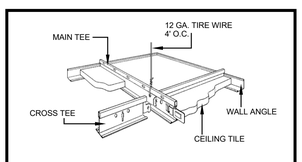

1 CEILING GRID DETAIL
N.T.S.

REFLECTED CEILING PLAN KEYED NOTES

1. DIMENSION INDICATES STARTING POINT FOR CEILING GRID INSTALLATION.
2. THE PREFERRED MOUNTING HEIGHT FOR THE SPECIFIED ACOUSTICAL LAY-IN CEILING, ACP-2, IS BETWEEN 10'-0" AND 12'-0" ABOVE FINISHED FLOOR, UNLESS PROHIBITED BY EXISTING CONDITIONS.
3. ACCENT TRACK LIGHT HEADS ARE TO BE AIMED AT FIXTURES PROVIDED BY THE FIXTURE VENDOR. CENTER LIGHTING TRACK AS DIMENSIONED FROM THE FACE OF THE WALL. CENTER TRACK HEAD FOR EVERY 4' OF FIXTURE. IF CEILING GRID CONFLICTS WITH LIGHT PLACEMENT, ADJUST LOCATION AS MINIMALLY AS FEASIBLE.
   - AT WALL FIXTURES, AIM SO THAT LIGHT BEAM EVENLY ILLUMINATES THE GRAPHIC AND MERCHANDISE COUNTER.
   - AT OEM DISPLAY TABLES, AIM SO THAT LIGHT BEAM ILLUMINATES THE DISPLAY COUNTER WITHOUT CREATING GLARE.
   - AT DEVICE TABLE, AIM SO THAT LIGHT BEAM ILLUMINATES THE COUNTER TOP DISPLAY EVENLY.
   - AT ENTERTAINMENT WALL, AIM SO THAT LIGHT BEAM ILLUMINATES THE DISPLAY SCREENS EVENLY WITHOUT CREATING A GLARE.
4. 1x4 LIGHT FIXTURE IS TO BE SUSPENDED FROM STRUCTURE AT AUXILIARY FIXTURE END SUSPENSION POINTS PROVIDED WITH FIXTURE. AN INTEGRAL "GRID-LOCK" FEATURE IS TO BE UTILIZED TO SECURE FIXTURE TO GRID.
5. INSTALL SPEAKER AT THIS LOCATION. SPEAKER CABLES TO BE INSTALLED WITH 10' OF ADDITIONAL LENGTH AT SPEAKER ENDS FOR ADJUSTMENT DURING TERMINATION. REFER TO COVER SHEET FOR SPECIFICATIONS. SPEAKER CABLES MUST BE PULLED DIRECTLY ABOVE IT RACK AND EXTEND TO FINISHED FLOOR. CONTRACTOR IS TO PROVIDE PLYWOOD BACKER, 24"x 24"X ¾" AT EACH SPEAKER LOCATION. REFER TO AT&T PROVIDED ENTD AUDIO AND CABLING REFERENCE PAGES FOR MORE INFORMATION.
6. INSTALL NEW GYPSUM BOARD SOFFIT DOWN TO 8'-10" AT STOREFRONT FOR WALL FIXTURE SUPPORT CONNECTION. SOFFIT TO ALIGN TO INTERIOR FACE OF WALL. PAINT PT-5.
7. GANG SALES AREA LIGHT SWITCHES AND OTHER DEVICES IN BACK OF HOUSE AREA. EXACT LOCATION AND HEIGHT TO BE DETERMINED BY ARCHITECT OF RECORD AND AS REQUIRED PER LOCAL CODES. CIRCUITING IS THE RESPONSIBILITY OF THE ENGINEER OF RECORD AND SHOULD INCLUDE THE FOLLOWING:
   - (1-2) SWITCHES FOR GENERAL LIGHTING AS REQUIRED PER CODE.
   - (1-2) SWITCH FOR ALL ACCENT FIXTURES.

LIGHT FIXTURE SCHEDULE

REQUIRED FIXTURES

TYPE	SYMBOL	SPECIFICATIONS	
T2W		FIXTURE: MANUFACTURER: LOCATION:	SURFACE MOUNTED LIGHTING TRACK, WHITE FINISH LIGHTOLIER 6000N SERIES WH SALES AREA
LT1W		FIXTURE: MANUFACTURER: LAMP: SWITCHING: LOCATION:	LED TRACK HEAD, 24 DEGREE MEDIUM FLOOD BEAM, WHITE FINISH SOLAIS XD20-25-27K-1400-W, 83CRI LED, 1058LM NOMINAL LED 17W DISPLAY LIGHTING OR NON-SWITCHED SALES AREA
FD2		FIXTURE: MANUFACTURER: LAMP: SWITCHING: LOCATION:	1x4 LED FLAT PANEL, 5000 LUMEN, 3500K METALUX 14FP424OC LED 40W GENERAL LIGHTING SALES AREA
FD2E		FIXTURE: MANUFACTURER: LAMP: SWITCHING: LOCATION: NOTES:	1x4 LED FLAT PANEL, 5000 LUMEN, 3500K - WITH EMERGENCY DRIVER METALUX 14FP424OC - EL LED 40W NON-SWITCHED/NIGHTLIGHT CIRCUIT SALES AREA INCLUDE EMERGENCY BALLAST AND SURE-LITES 1RTPL REMOTE TEST BUTTON.
F1		FIXTURE: MANUFACTURER: LAMP: SWITCHING: LOCATION:	2X4 LED TROFFER LITHONIA 4' INTERIOR LED: 2ALT45000LM BOH, RR, STORAGE
E1		FIXTURE: MANUFACTURER: LOCATION:	EMERGENCY EXIT COMBO LIGHT LITHONIA INTERIOR LED: LHQM-LED-M6 BOH, RR, STORAGE, SALES
E2		FIXTURE: MANUFACTURER: LOCATION:	EMERGENCY EXIT LIGHT LITHONIA INTERIOR LED: ELM2-LED-M12 RR, SALES

Designed By:
Moffett Construction
1535 American Way
Cedar Hill, TX 76001

PROJECT:
3020 BROADWAY ST
SAN ANTONIO, TX 78209

ISSUE:
4-26-19

REFLECTED CEILING PLAN

A3

SALES AREA FIXTURE SCHEDULE

OEM	APPLE	AA1-0	WALL UNIT - MERCHANDISING BAY	1
		FFG-3	WALL UNIT - 4 FOOT GRAPHIC	1
		AA2-0	WALL UNIT - MERCHANDISING BAY	1
		PW1-0	WALL UNIT - MERCHANDISING BAY	1
	SAM-SUNG	FFG-4	WALL UNIT - 4 FOOT GRAPHIC	1
		SA1-0	WALL UNIT - MERCHANDISING BAY	1
		FFG-1	WALL UNIT - 4 FOOT GRAPHIC	1
		DN2-0	WALL UNIT - MERCHANDISING BAY	0
		FFG-2	WALL UNIT - 4 FOOT GRAPHIC	1
PREPAID		PP1-0	WALL UNIT - MERCHANDISING BAY	1
PERSONAL AUDIO		PA1-0	PERSONAL AUDIO - MERCHANDISING BAY	1
		PA2-E	PERSONAL AUDIO - MERCHANDISING BAY	1
OTHER FIXTURES		ENT-12	12' ENTERTAINMENT WALL FIXTURE	1
		MFG-1	ENTERTAINMENT WALL GRAPHIC	2
		FSLS	FULL SERVICE LANDING STATION	1
		OPUS	OPUS INFRASTRUCTURE	2
		OEM-1	8 FOOT OEM TABLE - APPLE	1
		OEM-4	4 FOOT OEM TABLE - SAMSUNG	1
		RWT-4	RUNWAY TABLE - 4 FOOT	1
		LT-36	SALES AND SERVICE TABLE	2
		SS	SALES STOOL	6
		LT-LOW-36	ACCESSIBLE SALES AND SERVICE TABLE	1
		SS-LOW	ACCESSIBLE SALES CHAIR	3
		MSG-4	MODULAR SEATING GROUP FOR ENTERTAINMENT WALL	1

BOH FIXTURE SCHEDULE

IT RACK	7 FOOT IT DATA RACK	1
(2) IPAD	IPAD CHARGING STATIONS. (OPTIONAL BY AUTHORIZED RETAILER. NOT INCLUDED IN AT&T PROVIDED KIT OF PARTS)	1
WALL-MOUNTED RACK	WALL-MOUNTED RACK FOR DEALER EQUIPMENT. (BY AUTHORIZED RETAILER. NOT IN AT&T PROVIDED KIT OF PARTS)	1
QMI-SC	SECURED STORAGE CABINET	1

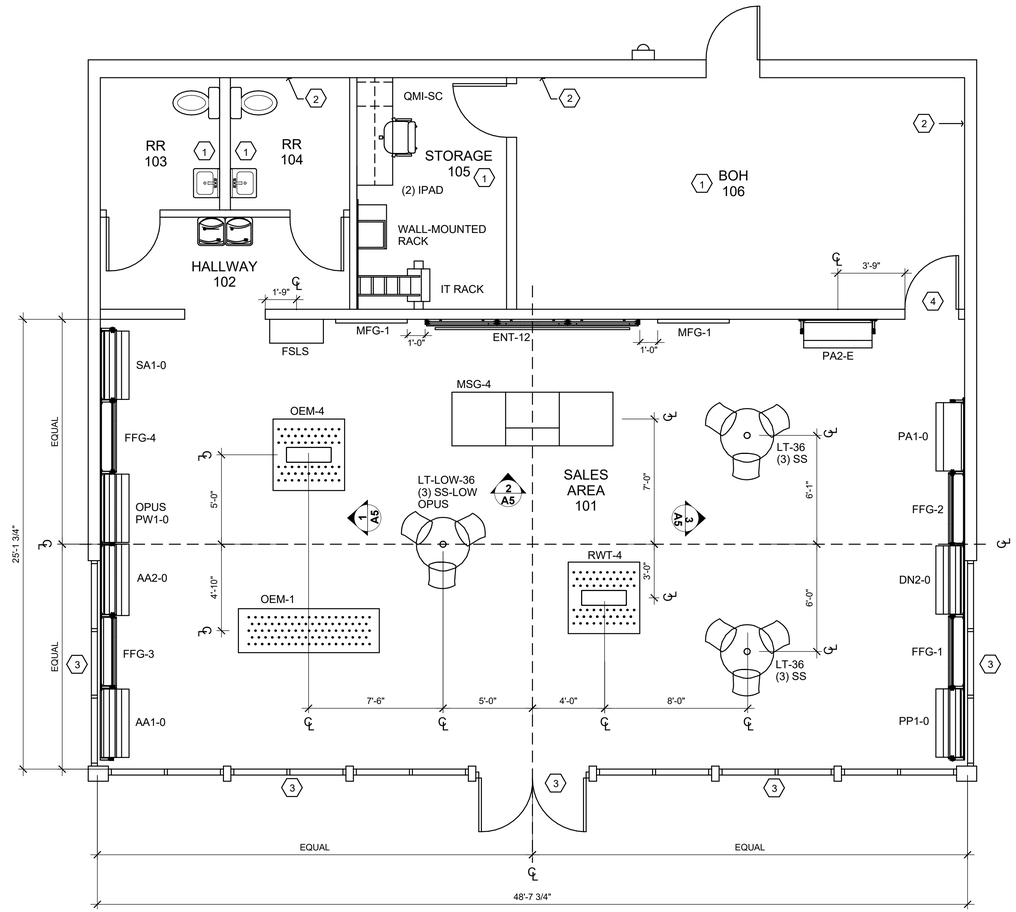

A4 SCALE : 1/4" = 1'
FIXTURE PLAN

FIXTURE PLAN GENERAL NOTES

1. CONTRACTOR IS TO PROVIDE ANY FIRE RETARDANT BLOCKING REQUIRED FOR THE INSTALLATION OF ALL SALES AREA FIXTURES. CONFIRM ALL BLOCKING AND INSTALLATION REQUIREMENTS WITH FIXTURE VENDOR.
2. CENTERLINES ARE USED TO LAY OUT POWER/DATA OUTLETS, SALES AREA FIXTURES, SUSPENDED CEILING SYSTEM & LIGHT FIXTURES. CONTRACTOR IS TO MARK AND VERIFY ALL CENTERLINES SHOWN ON THESE DRAWINGS PRIOR TO START OF CONSTRUCTION.
3. IT IS THE ARCHITECT OF RECORD'S RESPONSIBILITY TO FIELD VERIFY THAT THE FLOOR PLAN LENGTH, WIDTH AND LOCATIONS OF ANY OPENINGS / DOORS ARE ACCURATE. CONTACT DRS ARCHITECTS & PLANNERS, P.C. IMMEDIATELY IF THERE ARE ANY DIMENSIONAL DISCREPANCIES THAT CONFLICT WITH THE DESIGN INTENT SHOWN ON THESE DRAWINGS.
4. CONTRACTOR IS RESPONSIBLE FOR COORDINATING WITH AND INFORMING FIXTURE VENDOR OF ANY / ALL MODIFICATIONS REQUIRED TO SALES AREA FIXTURES.
5. IT IS THE ARCHITECT OF RECORD'S RESPONSIBILITY TO ENSURE ALL DOORS AND HARDWARE COMPONENTS ARE IN ACCORDANCE WITH ALL APPLICABLE CODES, INCLUDING LOCAL ACCESSIBILITY CODES.
6. IT IS THE ARCHITECT OF RECORD'S RESPONSIBILITY TO ENSURE ALL APPLICABLE ACCESSIBILITY CLEARANCES ARE MAINTAINED.
7. AUTHORIZED RETAILER IS RESPONSIBLE TO CONFIRM FINAL CEILING HEIGHT WITH AT&T PRIOR TO ORDERING FIXTURES, TO DETERMINE HEIGHT OF WALL BAY.
   - FOR CEILING HEIGHTS 10'-0" A.F.F. AND HIGHER - USE PROTOTYPICAL WALL FIXTURES
   - FOR CEILING HEIGHTS 9'-4" A.F.F. TO 9'-11" A.F.F. - USE SHORT WALL FIXTURES
   - FOR CEILING HEIGHTS 7'-8" A.F.F TO 9'-3" A.F.F. - USE EXTRA SHORT WALL FIXTURES
8. ALL EXISTING WALLS, DOORS, DOOR FRAMES AND HARDWARE ARE TO REMAIN. THE ARCHITECT OF RECORD SHALL BE RESPONSIBLE FOR ENSURING ALL COMPONENTS / ASSEMBLIES ARE CODE COMPLIANT AND IN GOOD WORKING CONDITION. REPAIR / REPLACE ITEMS AS NECESSARY.

FIXTURE PLAN KEYED NOTES

1. THE BACK OF HOUSE CONSTRUCTION, CODE COMPLIANCE AND FINISHES ARE OUTSIDE THE SCOPE OF WORK OF THESE DRAWINGS AND ARE THE FULL RESPONSIBILITY OF THE AUTHORIZED RETAILER AND THE ARCHITECT OF RECORD.
2. EXISTING EXTERIOR WALL IS SHOWN FOR REFERENCE ONLY. THE ARCHITECT OF RECORD SHALL BE RESPONSIBLE TO ENSURE A CODE COMPLIANT ASSEMBLY.
3. EXISTING STOREFRONT SYSTEM, INCLUDING DOOR, FRAME & HARDWARE IS SHOWN FOR REFERENCE ONLY. THE ARCHITECT OF RECORD SHALL BE RESPONSIBLE FOR ENSURING THAT ALL STOREFRONT COMPONENTS ARE IN GOOD WORKING CONDITION AND ARE ACCURATELY SHOWN IN THESE DRAWINGS. ANY EXISTING DECALS ON STOREFRONT MUST BE COMPLETELY REMOVED.
4. EXISTING INTERIOR DOOR IS SHOWN FOR REFERENCE ONLY. THE ARCHITECT OF RECORD SHALL BE RESPONSIBLE FOR ENSURING A CODE COMPLIANT ASSEMBLY.
   - DOOR TO BE PROVIDED WITH A KICKPLATE ON SALES AREA SIDE OF DOOR AND A CLOSER.

MOFFETT CONSTRUCTION

Designed By:
Moffett Construction
1535 American Way
Cedar Hill, TX 76001

PROJECT:
3020 BROADWAY ST
SAN ANTONIO, TX 78209

ISSUE:
4-26-19

FIXTURE PLAN

A4

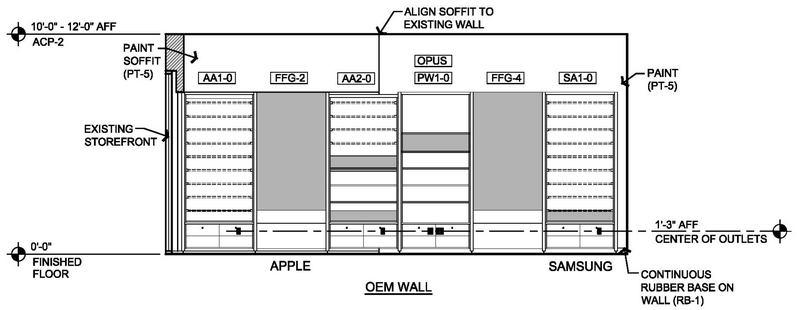

1 / A5 SALES AREA EAST ELEVATION

SCALE: 1/4" = 1'-0"

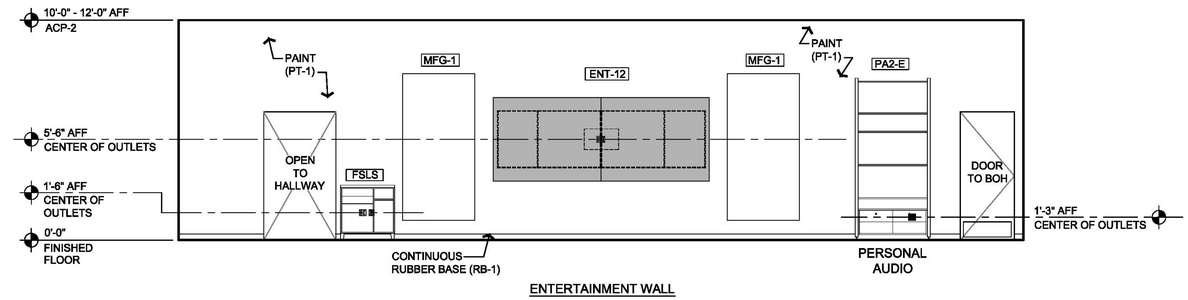

2 / A5 SALES AREA SOUTH ELEVATION

SCALE: 1/4" = 1'-0"

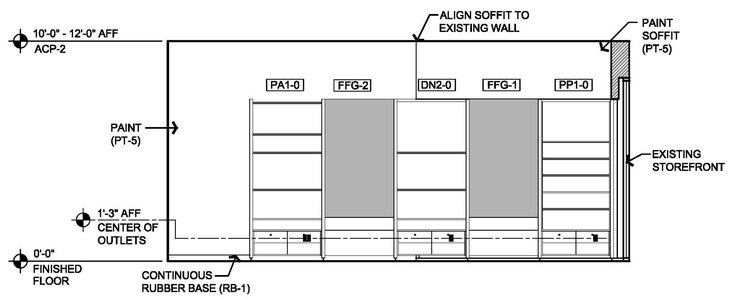

3 / A5 SALES AREA WEST ELEVATION

SCALE: 1/4" = 1'-0"

SALES AREA ELEVATIONS GENERAL NOTES

1. THE PREFERRED MOUNTING HEIGHT FOR THE SPECIFIED ACOUSTICAL LAY-IN CEILING, ACP-2, IS BETWEEN 10'-0" AND 12'-0" ABOVE FINISHED FLOOR. LOWER CEILINGS ARE ONLY ALLOWED WHEN EXISTING CONDITIONS DO NOT ALLOW FOR A HIGHER CEILING.

2. AUTHORIZED RETAILER IS RESPONSIBLE TO CONFIRM FINAL CEILING HEIGHT WITH AT&T PRIOR TO ORDERING FIXTURES, TO DETERMINE TYPE OF WALL FIXTURE:
   - FOR CEILING HEIGHT 10'-0" A.F.F. AND HIGHER - USE PROTOTYPICAL WALL FIXTURES
   - FOR CEILING HEIGHT 9'-4" TO 9'-11" A.F.F. - USE SHORT WALL FIXTURES
   - FOR CEILING HEIGHT 7'-8" TO 9'-3" A.F.F. - USE EXTRA SHORT WALL FIXTURES

Designed By:
Moffett Construction
1535 American Way
Cedar Hill, TX 76001

PROJECT:
3020 BROADWAY ST
SAN ANTONIO, TX 78209

ISSUE:
4-26-19

INTERIOR ELEVATIONS

A5

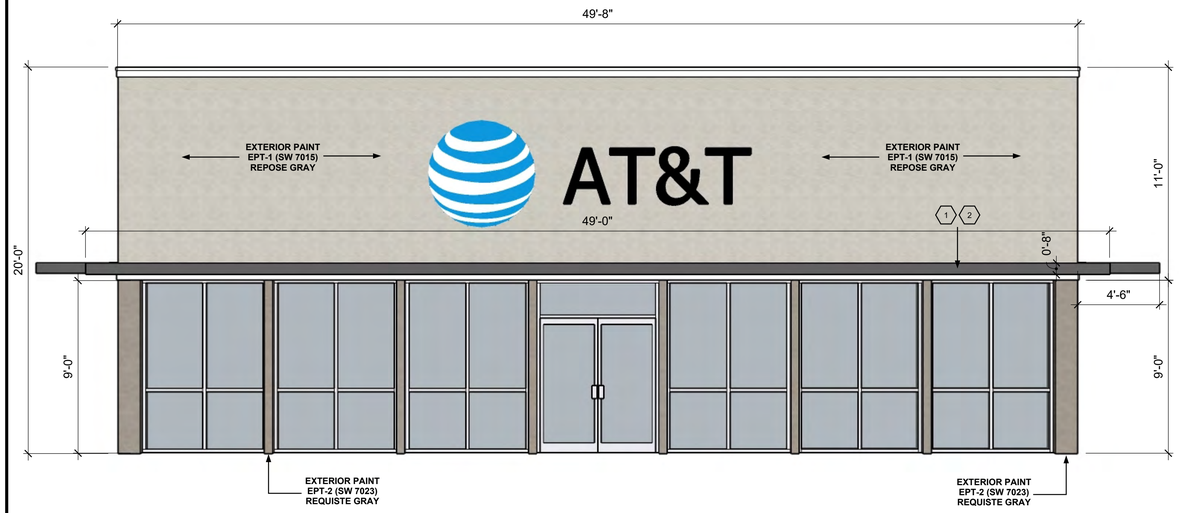

SOUTH EXTERIOR FRONT ELEVATION

N.T.S.

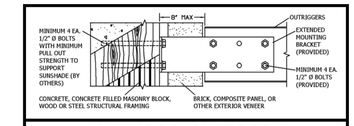

1 AWNING BRACKET DETAIL N.T.S.

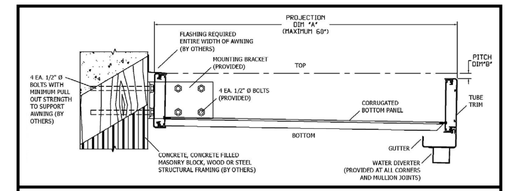

2 AWNING FULL INSTALL DETAIL N.T.S.

ELEVATION GENERAL NOTES

1. AT&T SIGNAGE TO BE DESIGNED & INSTALLED UNDER SEPERATE PERMIT BY OWNER/LL SIGN CONTRACTOR
2. SEE WINDOW SCHEDULE ON A2 FOR STOREFRONT SPECS & DETAILS
3. SEE EIFS / EXTERIOR WALLS PARTITION DETAILS ON A2.1.
4. EPT-1 & EPT-2 TO BE EXTERIOR SHERWIN WILLIAMS PAINT. SEE PAINT SPECS ON ELEVATIONS

AWNING KEY NOTES

1. AWNING TO BE INSTALLED PER MANUFACTURER SPECS. SEE DETAIL 1 & 2 A6
2. AWNING TO BE 54" DEEP WITH A 9/16" PITCH FOR DRAINAGE.
3. MANUF: ARCHITECTURAL LOUVERS
MODEL: H8CV-8" DEEP SOLID EXTRUDED ALUM
COLOR: BRONZE
PH: 888-568-8371

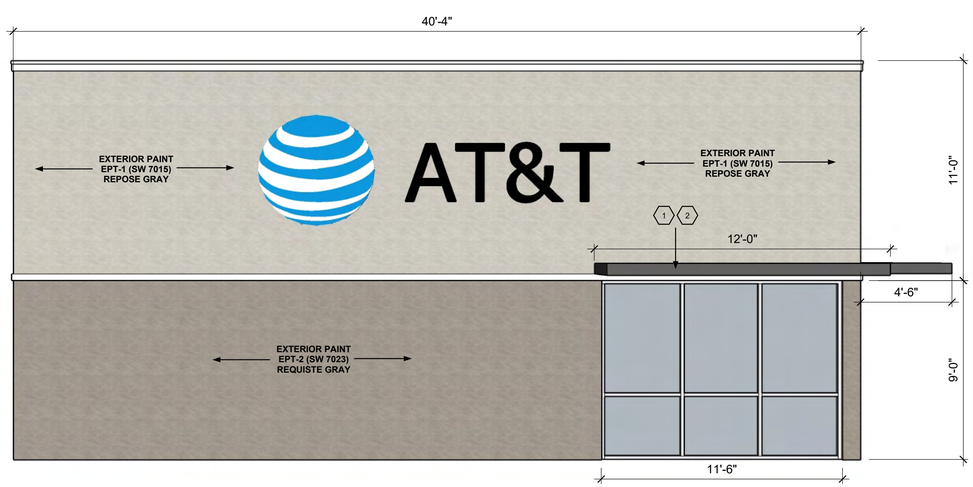

EAST EXTERIOR LEFT ELEVATION

N.T.S.

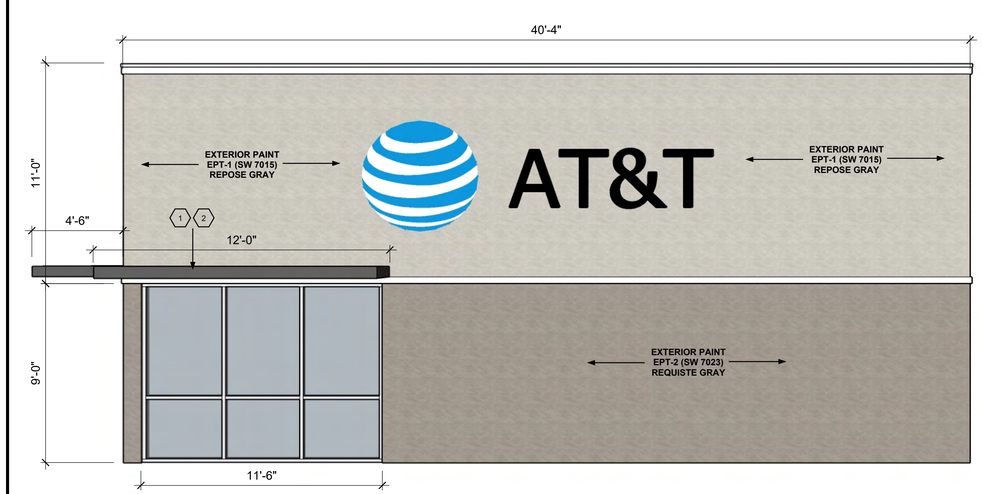

WEST EXTERIOR RIGHT ELEVATION

N.T.S.

Designed By:
Moffett Construction
1535 American Way
Cedar Hill, TX 76001

PROJECT:
3020 BROADWAY ST
SAN ANTONIO, TX 78209

ISSUE:
4-26-19

EXTERIOR ELEVATIONS

A6

ARCHITECTURAL SPECIFICATIONS

DIVISION 1 - GENERAL CONDITIONS

1. THE AMERICAN INSTITUTE OF ARCHITECTS A205 - GENERAL CONDITIONS FOR CONSTRUCTION (CURRENT EDITION) SHALL RELATE TO THE WORK OF THE PROJECT AND ARE HEREBY MADE A PART OF THESE CONTRACT DRAWINGS AS THOUGH FULLY CONTAINED. IN CASE OF CONFLICTS BETWEEN THE FOLLOWING PARAGRAPHS AND THE STANDARD GENERAL CONDITIONS FOUND IN THE CONSTRUCTION DOCUMENTS, THESE PARAGRAPHS SHALL GOVERN.

2. DRAWINGS AND SPECIFICATIONS ARE INTENDED TO BE COMPLEMENTARY. SPECIFIC INFORMATION SHALL BE FOUND IN EITHER OR BOTH.

3. THE CONTRACTOR SHALL LAY OUT WORK IN CONFORMITY WITH REQUIREMENTS OF CONTRACT DOCUMENTS, AND WILL BE HELD RESPONSIBLE FOR PROPER ESTABLISHMENT AND MAINTENANCE OF ALL LINES AND DIMENSIONS BEFORE DOING ANY WORK. THE TENANT'S GENERAL CONTRACTOR SHALL VERIFY ALL MEASUREMENTS AND CONDITIONS AT THE SITE AND NOTIFY THE ARCHITECT OF ANY DISCREPANCIES. RESULTING ERRORS CAUSED BY THE FAILURE OF THE CONTRACTOR TO EXERCISE SUCH PRECAUTION SHALL NOT BE CONSIDERED SUBSEQUENTLY AS A BASIS FOR ADDITIONAL COMPENSATION.

4. ANY DISCREPANCIES, ERRORS, OR OMISSIONS DISCOVERED IN THE CONTRACT DOCUMENTS BY THE CONTRACTOR SHALL BE BROUGHT TO THE ATTENTION OF THE ARCHITECT. CORRECTION OF SUCH ITEMS WILL BE THE RESPONSIBILITY OF THE CONTRACTOR. CONTRACTOR SHALL VERIFY LANDLORD'S CONSTRUCTION AND PLACEMENT OF WALL STUDS IN EXISTING DEMISING WALLS AND ADVISE LANDLORD, ARCHITECT AND OWNER OF DISCREPANCIES IMMEDIATELY. FAILURE TO NOTIFY ABOUT DISCREPANCIES SHALL BE DEEMED AS ACCEPTANCE, AND CONTRACTOR SHALL BE RESPONSIBLE THEREAFTER.

5. CODES AND STANDARDS: ALL WORK, MATERIALS AND INSTALLATIONS SHALL BE IN STRICT ACCORDANCE WITH APPLICABLE ORDINANCES, STATE AND LOCAL BUILDING CODES, LATEST EDITION. THE MOST STRINGENT REQUIREMENTS OF ALL APPLICABLE CODES SHALL GOVERN EACH INCREMENT OF WORK. ALL PERMITS, INSPECTIONS AND LICENSES NECESSARY FOR PROPER EXECUTION OF THE WORK SHALL BE SECURED AND PAID FOR BY THE CONTRACTOR(S) INVOLVED.

6. THE CONTRACTOR SHALL BE RESPONSIBLE FOR BECOMING THOROUGHLY FAMILIAR WITH THE LANDLORD'S TENANT HANDBOOK AND DESIGN CRITERIA IF AVAILABLE. ANY CONFLICTS ARISING BETWEEN DRAWINGS AND SPECIFICATIONS AND LANDLORD DIRECTION MUST BE BROUGHT TO THE ATTENTION OF THE ARCHITECT BEFORE THE WORK BEGINS.

7. TEMPORARY BARRICADE CONSTRUCTION: THE GENERAL CONTRACTOR SHALL PROVIDE BARRICADES IF REQUIRED BY LANDLORD OR OTHER GOVERNING AGENCIES.

8. THE CONTRACTOR SHALL USE DIMENSIONS ONLY. DO NOT SCALE PLANS. ALL DIMENSIONS ARE TO FINISHED FACE UNLESS OTHERWISE NOTED.

9. NO WOOD OR COMBUSTIBLE MATERIAL OF ANY KIND SHALL BE USED ABOVE THE CEILING.

10. UPON COMPLETION OF WORK GENERAL CONTRACTOR IS TO OBTAIN CERTIFICATION OF COMPLETION AND APPROVAL FROM BUILDING DEPARTMENT AND/OR OTHER AUTHORITIES HAVING JURISDICTION, AND SUBMIT SAME TO TENANT AND LANDLORD.

11. PROTECTION OF WORK IN PLACE: WORK THAT IS SUBJECT TO INJURY BECAUSE OF OPERATIONS BEING CARRIED OUT ADJACENT TO OR ABOVE, SHALL BE COVERED, BOARDED UP, OR SUBSTANTIALLY ENCLOSED WITH ADEQUATE PROTECTION. ALL FORMS OF PROTECTION SHALL BE CONSTRUCTED IN A MANNER SUCH THAT, UPON COMPLETION, THE ENTIRE WORK WILL BE DELIVERED TO THE OWNER IN PROPER WHOLE AND UNBLEMISHED CONDITION.

12. MATERIALS: ALL MANUFACTURED ARTICLES, MATERIALS AND EQUIPMENT SHALL BE APPLIED AS RECOMMENDED BY THE MANUFACTURER. ALL LIKE MATERIALS USED SHALL BE OF THE SAME MANUFACTURER AND QUALITY UNLESS OTHERWISE SPECIFIED.

13. WORKMANSHIP: ALL WORK UNDER THIS CONTRACT SHALL BE PERFORMED BY COMPETENT WORKMEN AND EXECUTED IN A NEAT AND WORKMAN-LIKE MANNER. ALL MATERIALS AND WORKMANSHIP SHALL BE GUARANTEED FOR ONE YEAR AFTER THE DATE OF ACCEPTANCE OF THE SPACE BY THE TENANT.

14. SHOP DRAWINGS AND CATALOG DATA ON ALL MAJOR ITEMS OF EQUIPMENT AND SYSTEMS, AND SUCH OTHER ILLUSTRATIVE MATERIALS WILL BE SUBMITTED IN ADEQUATE TIME TO PREVENT DELAY OR CHANGES DURING CONSTRUCTION. ONLY REQUIRED WHEN SUBSTITUTIONS TO SPECIFIED ITEMS ARE BEING PROPOSED.

15. ALL WELDING TO THE LANDLORD'S STRUCTURE MUST BE APPROVED IN WRITING BY THE LANDLORD'S REPRESENTATIVE.

16. CONTRACTOR SHALL INFORM HIMSELF AND ADHERE TO ANY SPECIFIC REQUIREMENTS AND CONDITIONS IMPOSED BY THE LANDLORD FOR WORKING IN THE OWNER'S LEASE SPACE. ALL WORK PERFORMED SHALL BE OF THE BEST QUALITY, AND CONFORMING TO THE CONSTRUCTION INDUSTRIES HIGHEST STANDARDS AND PRINCIPALS. ALL WORK PERFORMED SHALL BE TO THE OWNER'S AND LANDLORD'S CURRENT MINIMUM REQUIREMENTS. IT IS THE CONTRACTOR'S RESPONSIBILITY TO SECURE FROM THE OWNER A COPY OF THE LANDLORD'S PRE-CONSTRUCTION REQUIREMENTS AND WORK RULES AND COMPLY WITH ALL REQUIREMENTS AND SUCH RULES.

17. CONTRACTOR TO MAINTAIN A COMPETENT SUPERINTENDENT ON SITE DURING WORK IN PROGRESS: SUPERVISING WORK BEING PERFORMED WITH REASONABLE DILIGENCE, INCLUDING AFTER HOURS WORK TO COMPLETE THE PROJECT AS PER AGREED TIME SCHEDULE WITHOUT PENALTY AND/OR OVERTIME CHARGED TO THE OWNER.

18. THE CONTRACTOR SHALL MAINTAIN ORDERLY HOUSEKEEPING DURING THE PROCESS OF CONSTRUCTION AND UPON COMPLETION SHALL THOROUGHLY CLEAN ALL AREAS. FINAL CLEAN-UP SHALL INCLUDE THE FOLLOWING: SWEEP, DAMP MOP, AND WAX RESILIENT FLOORING. DUST, DIRT, PAINT DRIPPINGS, OIL, GREASE AND OTHER BLEMISHES SHALL BE REMOVED FROM ALL SURFACES, INCLUDING PIPING AND EQUIPMENT. WINDOWS, GLASS UNITS, GLASS DOORS AND MIRRORS SHALL BE WASHED. PAINT OVERRUNS AND PUTTY SMEARS SHALL BE REMOVED. ALL HARDWARE SHALL BE POLISHED CLEAN PER MANUFACTURERS RECOMMENDATION.

19. THE CONTRACTOR SHALL ASSEMBLE AND INSTALL AND CONNECT ALL OWNER SUPPLIED EQUIPMENT IN STRICT COMPLIANCE WITH ALL MANUFACTURER'S RECOMMENDATIONS.

20. CONTRACTOR IS RESPONSIBLE FOR PROTECTING OWNER-FURNISHED ITEMS FROM DAMAGE DURING STORAGE AND HANDLING, INCLUDING DAMAGE FROM EXPOSURE TO THE ELEMENTS.

21. IF OWNER-FURNISHED ITEMS ARE DAMAGED AS A RESULT OF CONTRACTOR'S OPERATIONS, CONTRACTOR SHALL REPAIR OR REPLACE THEM.

22. CONTRACTOR SHALL INSTALL AND OTHERWISE INCORPORATE OWNER-FURNISHED ITEMS IF INDICATED ON THE DRAWINGS, INTO THE WORK.

PROJECT MANAGEMENT AND COORDINATION

1. THE GENERAL CONTRACTOR WILL BE RESPONSIBLE FOR THE FOLLOWING PROJECT MANAGEMENT AND COORDINATION TASKS:

   A. THE COORDINATION AND SUPERVISION OF ALL ASPECTS OF THE CONSTRUCTION.

   B. PROVIDE THE NAME AND CONTACT INFORMATION OF THE PROJECT SUPERINTENDENT.

   C. BEING THOROUGHLY FAMILIAR WITH THE SHOPPING CENTER REQUIREMENTS AND ASSURING COMPLIANCE BY ALL SUB-CONTRACTORS.

   D. COORDINATE WITH THE SHOPPING CENTER MANAGEMENT THROUGHOUT CONSTRUCTION.

   E. SUBMITTAL OF RFI'S TO THE ARCHITECT IN A TIMELY FASHION.

SUBMITTALS

1. ALL REQUIRED SUBMITTALS WILL BE SENT TO THE ARCHITECT FOR APPROVAL AND MUST BEAR THE CONTRACTORS STAMP INDICATING REVIEW AND APPROVAL. PROVIDE 4 (FOUR) COPIES OF EACH SUBMITTAL.

CONSTRUCTION WASTE MANAGEMENT

1. EXCEPT FOR ITEMS OR MATERIALS TO BE SALVAGED, RECYCLED, OR OTHERWISE REUSED, REMOVE WASTE MATERIALS FROM PROJECT SITE AND LEGALLY DISPOSE OF THEM.

2. TEMPORARY TRASH STORAGE AND REMOVAL - THE GENERAL CONTRACTOR SHALL MAKE PROVISIONS AND COORDINATE WITH TENANT'S LANDLORD TO PROVIDE ARRANGEMENTS FOR THE STORAGE AND REMOVAL OF CONSTRUCTION OR DEMOLITION DEBRIS AND SHALL PAY ALL COSTS THAT ARISE FROM SUCH PROVISION.

3. DO NOT ALLOW WASTE MATERIALS THAT ARE TO BE DISPOSED OF TO ACCUMULATE ON SITE.

4. COORDINATE WITH THE SHOPPING CENTER MANAGEMENT FOR THE REMOVAL OF WASTE FROM MALL FACILITIES.

PRODUCT SUBSTITUTIONS

1. WHEN PERMITTED BY THE INDIVIDUAL SPECIFICATION SECTION, PRODUCT OR EQUIPMENT SUBSTITUTIONS WILL BE CONSIDERED BY THE ARCHITECT UNDER THE FOLLOWING CONDITIONS:

   A. SUBMITTALS ARE MADE PRIOR TO THE START OF CONSTRUCTION.

   B. PRODUCT IS IDENTICAL OR BETTER THAN THE THOSE SPECIFIED IN DESIGN, APPEARANCE, PERFORMANCE AND WARRANTY.

   C. THE SUBSTITUTION DOES NOT REQUIRE REVISIONS TO THE CONTRACT DOCUMENTS.

   D. THE SUBSTITUTION MEETS THE REQUIREMENTS OF LOCAL AUTHORITIES AND THE SHOPPING CENTER MANAGEMENT.

CUTTING AND PATCHING

1. THE CONTRACTOR IS TO EMPLOY SKILLED WORKMEN TO PERFORM THE CUTTING AND REMOVAL OF EXISTING CONSTRUCTION NECESSARY FOR THE INSTALLATION AND PERFORMANCE OF DESIGN SYSTEMS, AND THE PATCHING AND REPAIR OF SURFACES TO ORIGINAL OR DESIGNATED CONDITION.

2. DO NOT CUT STRUCTURAL ELEMENTS IN A MANNER THAT COULD CHANGE THEIR LOAD CARRYING ABILITY.

3. PROTECT ADJACENT CONSTRUCTION DURING CUTTING AND PATCHING PROCEDURE.

CLOSE OUT PROCEDURES

1. PROJECT CLOSE OUT REQUIREMENTS CONSIST OF THE COMPLETION OF THE FOLLOWING REQUIREMENTS:

   A. REQUIREMENTS OF THE GENERAL CONDITIONS OF THE CONTRACT.

   B. FINAL CLEANING OF THE PROJECT.

   C. TURN OVER OF THE RECORD DOCUMENTS, WARRANTIES AND MANUALS.

   D. COMPLETION OF ALL PUNCH LIST ITEMS.

   E. INSTRUCTIONS TO THE OWNER ON THE OPERATION OF ALL SYSTEMS.

PROJECT RECORD DOCUMENTS

1. THE CONTRACTOR SHALL, UPON COMPLETION OF THE WORK, COMPILE AND DELIVER TO THE OWNER A COMPLETE SET OF RECORD DOCUMENTS, CONSISTING OF RECORD DRAWINGS AND THE OWNER'S WARRANTY MANUAL OUTLINING FINAL INSTALLATION OF EQUIPMENT "CUT SHEETS", AND WARRANTIES.

2. ALL DOCUMENTS SHALL BE CLEARLY MARKED "PROJECT RECORD DOCUMENTS"

OPERATION, DEMONSTRATION AND TRAINING

1. THE CONTRACTOR SHALL COORDINATE AND SCHEDULE WITH THE OWNER A MEETING FOR THE TURNOVER, REVIEW AND EXPLANATION OF ALL MAINTENANCE AND OPERATION MANUALS. ADDITIONALLY THE CONTRACTOR SHALL LOCATE AND DEMONSTRATE FOR THE OWNER THE OPERATION OF ALL CONTROLS AND DEVICES.

DIVISION 2 - SITE WORK/DEMOLITION

1. THE EXTENT OF DEMOLITION WORK IS REPRESENTED ON THE DRAWINGS. THE CONTRACTOR SHALL INSPECT THE PROJECT SPACE AND VERIFY ALL DESIGNATED DEMOLITION ITEMS PRIOR TO COMMENCEMENT OF WORK.

2. NOTIFY OWNER IMMEDIATELY WHEN ANY UNIDENTIFIED STRUCTURAL ELEMENTS ARE UNCOVERED IN WALLS TO BE REMOVED AND WAIT FOR FURTHER DIRECTION PRIOR TO CONTINUING WORK IN THAT AREA.

3. REMOVAL OF ALL DEBRIS AND DISCARDED MATERIAL TO BE INCLUDED IN BID. THE SPACE SHALL BE BROOM SWEPT.

4. THE GENERAL CONTRACTOR SHALL INSPECT EXISTING CONDITIONS TO DETERMINE THE AMOUNT OF CONCRETE FLOOR SLAB TO BE REMOVED AND REPLACED FOR THE INSTALLATION OF NEW PLUMBING, ELECTRICAL AND MECHANICAL WORK. ALL PENETRATIONS OF THE SLAB SHALL BE PLANNED TO MINIMIZE CUTS TO THE CONCRETE FLOOR SLAB AND COORDINATED WITH THE LANDLORD'S TENANT COORDINATOR PRIOR TO START OF WORK. ANY SLAB OR STRUCTURAL MODIFICATIONS SHALL BE APPROVED IN WRITING BY THE LANDLORD PRIOR TO COMMENCING WORK.

DIVISION 3 - CONCRETE

1. ANY CONTRACTOR REQUIRED TO TRENCH OR CHIP CONCRETE FLOOR SLABS FOR A PORTION OF THE WORK SHALL BE RESPONSIBLE FOR BACK FILLING AND PATCHING AS REQUIRED TO RETURN THE SLAB TO ITS ORIGINAL CONDITION.

2. WHERE THERE IS AN EXISTING CONCRETE FLOOR SLAB, PREPARE THE SLAB TO RECEIVE FINISH AS INDICATED ON DRAWINGS.

3. THE GENERAL CONTRACTOR SHALL INSPECT JOB SITE CONDITIONS AND REPORT ANY VARIATIONS IN THE LEVEL OR SURFACE OF THE EXISTING SLAB THAT WOULD AFFECT THE AESTHETICS OR WEARABILITY OF THE FLOOR FINISH.

4. ALL FLOOR PENETRATIONS TO BE WATERPROOFED PER LANDLORD'S REQUIREMENTS AND/OR LOCAL CODES.

5. CONFORM TO ACI 318 BUILDING CODE AND ACI 301 SPECIFICATIONS FOR STRUCTURAL CONCRETE BUILDINGS. LANDLORD'S WRITTEN APPROVAL IS REQUIRED FOR ANY MODIFICATION.

6. WHERE THERE IS AN EXISTING FLOOR SLAB REQUIRING LEVELING, THE GENERAL CONTRACTOR SHALL PERFORM CONCRETE LEVELING IN ACCORDANCE WITH PROVEN MATERIALS AND METHODS ASSURING THE QUALITY OF THE FINISHED WORK. GENERAL CONTRACTOR TO SECURE IN WRITING FROM LANDLORD APPROVAL PRIOR TO ANY LEVELING.
7. PROVIDE A PORTLAND CEMENT-BASED TROWEL APPLIED LATEX MODIFIED OVERLAYMENT TO USE AS A BASE AND LEVELING COAT, AND A PORTLAND CEMENT-BASED LATEX MODIFIED FINE TEXTURED POWDER TO ACHIEVE A SMOOTH SURFACE.

DIVISION 5 - METALS

1. CONTRACTOR SHALL PROVIDE ALL STEEL STUDS AND NECESSARY ACCESSORIES REQUIRED FOR A COMPLETE INSTALLATION.

2. THE INSTALLER MUST EXAMINE THE SPACE IN WHICH, AND SUBSTRATES TO WHICH, SYSTEMS ARE TO BE APPLIED.

3. CONTRACTOR TO NOTIFY OWNER, IN WRITING, OF ANY CONDITIONS DETRIMENTAL TO PROPER AND TIMELY COMPLETION OF WORK.

4. METAL STUDS AND LIGHT GAUGE METAL FRAMING SHALL BE GALVANIZED STEEL STUDS, SIZED AS INDICATED ON DRAWINGS OR AS REQUIRED, INCLUDING ALL ACCESSORIES SUCH AS BRIDGING, TRACK, ETC. GENERAL CONTRACTOR TO PROVIDE ALL MISCELLANEOUS BOLTS, CLIPS, ANCHORS, ANGLES, BRACKETS, SLEEVES, FASTENERS, AND OTHER METAL ITEMS AS REQUIRED.

5. STRUCTURAL METALS: THE DESIGN OF ALL MISCELLANEOUS METAL LINTELS, COLUMNS, SUPPORTS AND FRAMING REQUIRED, SHALL BE THE SOLE RESPONSIBILITY OF THE GENERAL CONTRACTOR. SHOP DRAWINGS OF SUCH MISCELLANEOUS AND STRUCTURAL METAL WORK SHALL BE SUBMITTED FOR APPROVAL.

6. FABRICATION:

   A. ALL FRAMING COMPONENTS SHALL BE CUT SQUARELY FOR ATTACHMENT TO PERPENDICULAR MEMBERS OR AS REQUIRED FOR ANGULAR FIT AGAINST STRUCTURE.

   B. FASTENING OF COMPONENTS SHALL BE WITH SELF-DRILLING SCREWS OR WELDING. SCREWS OR WELDS SHALL BE OF SUFFICIENT SIZE TO INSURE THE STRENGTH OF THE CONNECTION. WIRE TYING OF COMPONENTS IS NOT PERMITTED. ALL WELDS SHALL BE TOUCHED UP WITH ZINC-RICH PAINT.

7. ERECTION:

   A. RUNNERS SHALL BE SECURELY ANCHORED TO THE SUPPORTING STRUCTURE. ABUTTING LENGTHS OF RUNNER SHALL BE SECURELY ANCHORED TO A COMMON STRUCTURAL ELEMENT, BUTT-WELD OR SPLICED.

   B. ALL STUDS SHALL BE PLUMBED, ALIGNED AND SECURELY ATTACHED TO FLANGES OF BOTH UPPER AND LOWER RUNNERS.

   C. JACK STUDS OR CRIPPLES SHALL BE INSTALLED ABOVE DOOR HEADS AND ELSEWHERE TO FURNISH SUPPORTS, SECURELY ATTACHED TO CONNECTING MEMBERS.

   D. PROVISIONS FOR STRUCTURAL VERTICAL MOVEMENT, AND LATERAL BRACING SHALL BE PROVIDED AS INDICATED ON THE DRAWINGS OR AS REQUIRED BY GOVERNING CODES.

8. SHOP PRIMERS: PROVIDE PRIMERS THAT COMPLY WITH DIVISION 9 SECTION "PAINTING"

   A. SHOP PRIME ALL CONCEALED FERROUS METAL: FAST CURING, LEAD- AND CHROMATE-FREE, UNIVERSAL MODIFIED-ALKYD PRIMER COMPLYING WITH PERFORMANCE REQUIREMENTS IN FS TT-P-664: SELECTED FOR GOOD RESISTANCE TO NORMAL ATMOSPHERIC CORROSION, COMPATIBILITY WITH FINISH PAINT SYSTEMS INDICATED, AND COMPATIBILITY TO PROVIDE A SOUND FOUNDATION FOR FIELD-APPLIED TOPCOATS DESPITE PROLONGED EXPOSURE.

9. NON SHRINK, NONMETALLIC GROUT: FACTORY PACKAGED, NONSTAINING, NON CORROSIVE, NON GASEOUS GROUT COMPLYING WITH ASTM C 1107. PROVIDE GROUT SPECIFICALLY RECOMMENDED BY MANUFACTURER FOR INTERIOR AND EXTERIOR APPLICATIONS.

10. SHOP ASSEMBLY: PREASSEMBLE ITEMS IN SHOP TO GREATEST EXTENT POSSIBLE TO MINIMIZE FIELD SPLICING AND ASSEMBLY. DISASSEMBLE UNITS ONLY AS NECESSARY FOR SHIPPING AND HANDLING LIMITATIONS. USE CONNECTIONS THAT MAINTAIN STRUCTURAL VALUE OF JOINED PIECES. CLEARLY MARK UNITS FOR REASSEMBLY AND COORDINATED INSTALLATION.

    A. SHEAR AND PUNCH METALS CLEANLY AND ACCURATELY. REMOVE BURRS.

    B. EASE EXPOSED EDGES TO A RADIUS OF APPROXIMATELY 1/32 INCH (1 mm), UNLESS OTHERWISE INDICATED.

    C. WELD CORNERS AND SEAMS CONTINUOUSLY, AT EXPOSED CONNECTIONS, FINISH EXPOSED WELDS AND SURFACES SMOOTH AND BLENDED SO NO ROUGHNESS SHOWS AFTER FINISHING AND CONTOUR OF WELDED SURFACE MATCHES THAT OF ADJACENT SURFACE.

    D. PROVIDE FOR ANCHORAGE OF TYPE INDICATED; COORDINATE WITH SUPPORTING STRUCTURE. FABRICATE AND SPACE ANCHORING DEVICES TO SECURE METAL FABRICATIONS RIGIDLY IN PLACE AND TO SUPPORT INDICATED LOADS.

    E. CUT, REINFORCE, DRILL, AND TAP METAL FABRICATIONS AS INDICATED TO RECEIVE FINISH HARDWARE, SCREWS, AND SIMILAR ITEMS.

    F. FORM EXPOSED WORK TRUE TO LINE AND LEVEL WITH ACCURATE ANGLES AND SURFACES AND STRAIGHT SHARP EDGES.

    G. REMOVE SHARP OR ROUGH AREAS ON EXPOSED TRAFFIC SURFACES.

    H. FORM EXPOSED CONNECTIONS WITH HAIRLINE JOINTS, FLUSH AND SMOOTH, USING CONCEALED FASTENERS WHERE POSSIBLE. USE EXPOSED FASTENERS OF TYPE INDICATED OR, IF NOT INDICATED, PHILLIPS FLAT HEAD (COUNTERSUNK) SCREWS OR BOLTS. LOCATE JOINTS WHERE LEAST CONSPICUOUS.

11. PROVIDE STEEL FRAMING AND SUPPORTS THAT ARE NOT PART OF STRUCTURAL-STEEL FRAME WORK AS NECESSARY TO COMPLETE THE WORK.

12. MISCELLANEOUS STEEL TRIM: UNLESS OTHERWISE INDICATED, FABRICATE UNITS FROM STRUCTURAL STEEL SHAPES, PLATES AND BARS OF PROFILES SHOWN WITH CONTINUOUSLY WELDED JOINTS, AND SMOOTH EXPOSED EDGES. MITER CORNERS AND USE CONCEALED FIELD SPLICES WHERE POSSIBLE. PROVIDE CUTOUTS, FITTINGS, AND ANCHORAGES AS NEEDED TO COORDINATE ASSEMBLY AND INSTALLATION WITH OTHER WORK.

13. COMPLY WITH NAMM'S METAL FINISHES MANUAL FOR ARCHITECTURAL AND METAL PRODUCTS FOR RECOMMENDATIONS FOR APPLYING AND DESIGNATING FINISHES.

DIVISION 6 - WOOD AND PLASTICS

1. PROVIDE ALL NECESSARY LABOR, MATERIALS, AND EQUIPMENT FOR COMPLETE FRAMING WORK AS REQUIRED ON THE DRAWINGS.

2. ALL LUMBER SHALL BE NEW, BEARING NAME AND TRADEMARK OF ASSOCIATION UNDER WHICH IT WAS PRODUCED.

3. IT IS THE INTENT THAT ALL FRAMING BE METAL FRAMING.

4. ANY WOOD USED SHALL BE FIRE-RETARDANT TREATED.

5. LAYOUT, CUT, FIT AND ERECT FRAMING FOR ROUGH AND FINISHED WORK. INSTALL BLOCKING, NAILERS, FURRING AND OTHER ROUGH AND FINISHED MATERIALS AS REQUIRED. BRACE, PLUMB AND LEVEL MEMBERS IN TRUE ALIGNMENT AND RIGIDLY SECURE IN PLACE WITH SUFFICIENT NAILS, SCREWS AND BOLTS AS NECESSARY. FINISH NAIL ALL FINISH TRIM AND SET NAILS.
6. FURNISH AND INSTALL ALL GROUNDS, NAILERS, FURRING, OR BLOCKING REQUIRED FOR SUPPORT OR ATTACHMENT OF OTHER CONSTRUCTION.

7. FURNISH AND INSTALL ALL ROUGH HARDWARE, ANCHORS, BOLTS, ETC. AS REQUIRED FOR CARPENTRY WORK. WOOD IS NOT ALLOWED IN SPACE BETWEEN UNDERSIDE OF STRUCTURE AND FINISHED CEILING. USE METAL STRAPPING.

8. PROVIDE NAILS, SCREWS, AND OTHER ANCHORING DEVICES OF TYPE, SIZE, MATERIAL, AND FINISH REQUIRED FOR APPLICATION INDICATED TO PROVIDE SECURE ATTACHMENT, CONCEALED WHERE POSSIBLE.

MILLWORK

1. ALL ARCHITECTURAL WOODWORK AND MILLWORK SHALL BE MANUFACTURED IN ACCORDANCE WITH THE STANDARDS IN THE CURRENT EDITION OF THE ARCHITECTURAL WOODWORK QUALITY STANDARDS OF THE ARCHITECTURAL WOODWORK INSTITUTE IN THE GRADE OR GRADES HEREINAFTER SPECIFIED OR SHOWN ON THE DRAWINGS.

2. PLYWOOD: UNLESS NOTED OTHERWISE, PLYWOOD SHALL BE PAINT GRADE BIRCH IN CABINETRY IF PAINT FINISH IS TO BE APPLIED, A-D GRADE OTHERWISE. ALL EXPOSED EDGES SHALL HAVE 1/4" THICK HARDWOOD EDGE BAND. PLYWOOD IN THE EQUIPMENT ROOM SHALL BE 3/4" THICK, FIRE RETARDANT, C-D GRADE BIRCH.

3. PARTICLE BOARD: UNLESS NOTED OTHERWISE ALL PARTICLE BOARD SHALL BE HIGH DENSITY INDUSTRIAL GRADE. ALL EXPOSED EDGES IN CABINETRY SHALL HAVE A 1/4" THICK HARDWOOD EDGE BAND.

4. PLASTIC LAMINATE: ALL PLASTIC LAMINATE SHALL BE 1/16" THICK UNLESS NOTED OTHERWISE. ALL PLYWOOD AND PARTICLE BOARD DOORS WHICH ARE TO HAVE A PLASTIC LAMINATE FACE SHALL HAVE A PLASTIC LAMINATE SHEET ON BACK

5. THE MILLWORK CONTRACTOR FOR SUPPORT AREA MILLWORK SHALL FABRICATE, FINISH, DELIVER, AND INSTALL ALL MILLWORK AS SHOWN ON DRAWINGS.

6. THE CONTRACTOR(S) SHALL BE RESPONSIBLE FOR:

   A. ALL INFORMATION CONTAINED ON THE ENCLOSED DRAWINGS, EXCEPT WHERE OTHERWISE NOTED.

   B. PREPARING DETAILED INSTRUCTIONS ON AREAS THAT REQUIRE BLOCKING OR REINFORCING.

DIVISION 7 - THERMAL AND MOISTURE PROTECTION

FIRESTOPPING

1. PROVIDE FIRESTOPPING WHERE PENETRATIONS OCCUR IN A RATED FIRE-RESISTANT ASSEMBLY.

2. INSTALL FIRE STOPPING IN A MANNER THAT MAINTAINS THE REQUIRED FIRE SEPARATION. USE FIRE STOP SYSTEM AS MANUFACTURED BY UNITED STATES GYPSUM OR APPROVED EQUAL.

JOINT SEALERS

1. PROVIDE JOINT SEALANTS FOR THE FOLLOWING APPLICATIONS:

   A. TILE CONTROL AND EXPANSION JOINTS.

   B. PERIMETER JOINTS BETWEEN INTERIOR WALL SURFACES AND FRAMES OF INTERIOR DOORS.

   C. JOINTS BETWEEN PLUMBING FIXTURES AND ADJOINING WALLS, FLOORS, AND COUNTERS.

   D. OTHER JOINTS AS INDICATED.

2. PROVIDE JOINT SEALANTS FOR INTERIOR APPLICATIONS THAT ESTABLISH AND MAINTAIN AIRTIGHT AND WATER-RESISTANT CONTINUOUS JOINT SEALS WITHOUT STAINING OR DETERIORATING JOINT SUBSTRATES.

3. PROVIDE JOINT SEALANTS, BACKINGS, AND OTHER RELATED MATERIALS THAT ARE COMPATIBLE WITH ONE ANOTHER AND WITH JOINT SUBSTRATES UNDER CONDITIONS OF SERVICE AND APPLICATION, AS DEMONSTRATED BY SEALANT MANUFACTURER BASED ON TESTING AND FIELD EXPERIENCE.

4. COMPLY WITH JOINT SEALANT MANUFACTURER'S WRITTEN PREPARATION AND INSTALLATION INSTRUCTIONS FOR PRODUCTS AND APPLICATIONS INDICATED, UNLESS MORE STINGENT REQUIREMENTS APPLY.

5. COMPLY WITH RECOMMENDATIONS OF ASTM C 1193 FOR USE OF JOINT SEALANTS AS APPLICABLE TO MATERIALS, APPLICATIONS, AND CONDITIONS INDICATED.

6. CLEAN OFF EXCESS SEALANTS OR SEALANT SMEARS ADJACENT TO JOINTS AS THE WORK PROGRESSES BY METHODS AND WITH CLEANING MATERIALS APPROVED IN WRITING BY MANUFACTURERS OF JOINT SEALANTS AND OF PRODUCTS IN WHICH JOINTS OCCUR.

INSULATION

1. CONTRACTOR TO PROVIDE AND INSTALL THE SPECIFIED THERMAL INSULATION DESIGNATED BY THE REQUIREMENTS OF THE ASSOCIATED PARTITION TYPE.

2. CONTRACTOR IS TO SUPPLEMENT EXISTING THERMAL INSULATION TO ASSURE A COMPLETE THERMAL BARRIER FROM FLOOR TO ROOF DECK.

3. IF REQUIRED BY THE DRAWINGS, PROVIDE AND INSTALL NEW SPECIFIED ABOVE CEILING INSULATION TO COMPLETE THERMAL BARRIER.

DIVISION 8 - DOORS AND WINDOWS

STANDARD STEEL DOORS AND FRAMES

1. THE CONTRACTOR SHALL PROVIDE DOORS AND FRAMES OF SIZES, THICKNESSES, AND DESIGNS INDICATED. INSTALL STANDARD STEEL DOORS AND FRAMES PLUMB, RIGID, PROPERLY ALIGNED, AND SECURELY FASTENED IN PLACE; COMPLY WITH DRAWINGS AND MANUFACTURER'S WRITTEN INSTRUCTIONS.

2. HOLLOW METAL: DOORS SHALL CONSIST OF TWO (2) FLUSH FACES OF 14 GAUGE STEEL, ONE PIECE, QUALITY ROLLED SHEET STEEL WITH ONE PIECE SOUND INSULATED CORE BONDED TO BOTH FACES. TOP AND BOTTOM CHANNELS TO BE 16 GAUGE STEEL; HINGE REINFORCEMENT TO BE 10 GAUGE STEEL; FRAME SHALL BE 16 GAUGE WITH INTEGRAL STOPS AND MITERED CORNER JOINTS. DOORS THAT HAVE SPECIAL REQUIREMENTS WILL BE NOTED ON DOOR SCHEDULE. ALL RATED DOORS TO BE "U.L." OR FACTORY MUTUAL "F.M." LISTED.

3. STANDARD STEEL DOORS AND FRAMES ARE TO BE PROVIDED WITH FACTORY APPLIED SHOP PRIMER READY FOR FIELD PAINTING AS SCHEDULED.

4. PREPARE ALL JAMBS TO RECEIVE (3) THREE DOOR SILENCERS PER JAMB, UNLESS NOTED OTHERWISE.

5. FLOOR AND JAMB ANCHORS: PROVIDE (4) FOUR JAMB ANCHORS AND (1) ONE FLOOR ANCHOR PER JAMB.

6. SOURCE LIMITATIONS: OBTAIN STANDARD STEEL DOORS AND FRAMES THROUGH ONE SOURCE FROM A SINGLE MANUFACTURER.

7. FIRE-RATED DOOR FRAME ASSEMBLIES: ASSEMBLIES COMPLYING WITH NFPA 80 THAT ARE LISTED AND LABELED BY A TESTING AND INSPECTING AGENCY ACCEPTABLE TO AUTHORITIES HAVING JURISDICTION, FOR FIRE-PROTECTION RATINGS INDICATED.

WOOD DOORS

1. SOLID CORE WOOD: DOORS SHALL BE MANUFACTURED IN ACCORDANCE WITH THE LATEST NATIONAL WOODWORK MANUFACTURER'S ASSOCIATION INDUSTRY STANDARD. WOOD DOORS SHALL BE PAINT GRADE BIRCH UNLESS OTHERWISE NOTED ON DOOR SCHEDULE.

SCHEDULED DOOR HARDWARE

1. ALL DOOR HARDWARE TO COMPLY WITH AMERICANS WITH DISABILITIES ACT(ADA), ACCESSIBILITY GUIDELINES FOR BUILDING AND FACILITIES (ADAAG) OR PREVAILING CODE GOVERNING THESE ISSUES.

2. DOOR CLOSER MAXIMUM OPENING FORCE REQUIRED SHALL NOT EXCEED:

   A. INTERIOR HINGED DOORS - 5LB APPLIED PERPENDICULAR TO DOOR.

   B. FIRE DOORS - MAXIMUM OPENING FORCE ALLOWABLE BY AUTHORITIES HAVING JURISDICTION.

3. PROVIDE DOOR HARDWARE FOR EACH DOOR TO COMPLY WITH REQUIREMENTS IN THIS SECTION, DOOR HARDWARE SETS INDICATED IN DOOR AND FRAME SCHEDULE, AND THE DOOR HARDWARE SCHEDULE LOCATED IN THE DRAWINGS.

4. DOOR HARDWARE SETS: PROVIDE QUANTITY, ITEM, SIZE, FINISH OR COLOR INDICATED, AND PRODUCTS EQUIVALENT IN FUNCTION AND COMPARABLE IN QUALITY TO NAMED PRODUCTS.

5. DESIGNATIONS: REQUIREMENTS FOR DESIGN, GRADE, FUNCTION, FINISH, SIZE, AND OTHER DISTINCTIVE QUALITIES OF EACH TYPE OF DOOR HARDWARE ARE INDICATED IN THE DOOR HARDWARE SCHEDULE.

6. NAMED MANUFACTURER'S PRODUCTS: PRODUCT DESIGNATION AND MANUFACTURER ARE LISTED FOR EACH DOOR HARDWARE TYPE REQUIRED FOR THE PURPOSE OF ESTABLISHING MINIMUM REQUIREMENTS. MANUFACTURERS' NAMES ARE ABBREVIATED IN THE DOOR HARDWARE SCHEDULE.

7. MOUNT DOOR HARDWARE UNITS AT HEIGHTS INDICATED BY THE DOOR AND HARDWARE INSTITUTE, UNLESS SPECIFICALLY INDICATED OR REQUIRED TO COMPLY WITH GOVERNING REGULATIONS.

   A. STANDARD STEEL DOORS AND FRAMES: DHI'S "RECOMMENDED LOCATIONS FOR ARCHITECTURAL HARDWARE FOR STANDARD STEEL DOORS AND FRAMES."

   B. WOOD DOORS: DHI WDHS.3, "RECOMMENDED LOCATIONS FOR ARCHITECTURAL HARDWARE FOR WOOD FLUSH DOORS."

8. INSTALL EACH DOOR HARDWARE ITEM TO COMPLY WITH MANUFACTURER'S WRITTEN INSTRUCTIONS.

9. ADJUST AND CHECK EACH OPERATING ITEM OF DOOR HARDWARE AND EACH DOOR TO ENSURE PROPER OPERATION OR FUNCTION OF EVERY UNIT. ADJUST DOOR CONTROL DEVICES TO COMPENSATE FOR FINAL OPERATION OF HEATING AND VENTILATING EQUIPMENT AND TO COMPLY WITH ACCESSIBILITY REQUIREMENTS.

10. CLEAN ALL HARDWARE ITEMS AND ADJACENT SURFACES SOILED BY DOOR HARDWARE INSTALLATION.

DIVISION 9 - FINISHES

GYPSUM BOARD ASSEMBLIES

1. PARTITION TYPES, THEIR LOCATIONS AND CONSTRUCTION REQUIREMENTS ARE INDICATED ON THE DRAWINGS.

2. PROVIDE 5/8" TYPE "X" GYPSUM WALL BOARD WITH ALL EXPOSED JOINTS AND FASTENER HEADS SMOOTH AND FLUSH WITH SURFACE OF BOARD. JOINTS TAPED AND PREPARED FOR APPLICATION OF FINISH.

3. USE 5/8" WATER RESISTANT BOARD AT ALL WET AREAS TO 4'-0" A.F.F.

4. PROVIDE THE FOLLOWING LEVELS OF GYPSUM BOARD FINISH PER GA-214.

   A. LEVEL 1 FOR CONCEALED AREAS.

   B. LEVEL 2 FOR AREAS FROM SUBSTRATES FOR FRP, TILE, ETC.

   C. LEVEL 4 FOR EXPOSED FINISH AREAS.

5. ALL DEMISING PARTITIONS TO BE ONE HOUR RATED.

6. FOR GYPSUM BOARD ASSEMBLIES WITH FIRE-RESISTANCE RATINGS, PROVIDE MATERIALS AND CONSTRUCTION IDENTICAL TO THOSE TESTED IN ASSEMBLY INDICATED.

7. DO NOT BRIDGE BUILDING CONTROL AND EXPANSION JOINTS WITH STEEL FRAMING OR FURRING MEMBERS. FRAME BOTH SIDES OF JOINT INDEPENDENTLY.

8. FRAME DOOR OPENINGS TO COMPLY WITH GA-600 AND WITH GYPSUM BOARD MANUFACTURER'S APPLICABLE WRITTEN RECOMMENDATIONS, UNLESS OTHERWISE INDICATED.

9. INSTALL TWO STUDS AT EACH JAMB, UNLESS OTHERWISE INDICATED. INSTALL CRIPPLE STUDS AT EACH HEAD ADJACENT TO EACH JAMB STUD, WITH A MINIMUM 1/2" CLEARANCE FROM JAMB STUD TO ALLOW FOR INSTALLATION OF CONTROL JOINT.

10. ISOLATE PERIMETER OF NON-LOAD-BEARING GYPSUM BOARD PARTITIONS AT STRUCTURAL ABUTMENTS, EXCEPT FLOORS. PROVIDE 1/4" - 1/2" WIDE SPACES AT THESE LOCATIONS, AND TRIM EDGES WITH U-BEAD EDGE TRIM WHERE EDGES OF GYPSUM PANELS ARE EXPOSED. SEAL JOINTS BETWEEN EDGES AND ABUTTING STRUCTURAL SURFACES WITH ACOUSTICAL SEALANT.

11. LAMINATING TO SUBSTRATE: WHERE GYPSUM PANELS ARE INDICATED AS DIRECTLY ADHERED TO A SUBSTRATE (OTHER THAN STUDS, JOISTS, FURRING MEMBERS, OR BASE LAYER OF GYPSUM BOARD), COMPLY WITH GYPSUM BOARD MANUFACTURER'S WRITTEN RECOMMENDATIONS AND TEMPORARILY BRACE OR FASTEN GYPSUM PANELS UNTIL FASTENING ADHESIVE HAS SET.

CEILINGS

1. PROVIDE CEILING ASSEMBLY AS SHOWN ON DRAWINGS. WHERE SHOWN AS FIRE RATED, CEILING TO BE INSTALLED IN STRICT ACCORDANCE WITH U.L. ASSEMBLY REQUIREMENTS. TOTAL ASSEMBLY TO BE 1 HR. FIRE RATED.

2. THE CONTRACTOR SHALL FURNISH AND INSTALL CEILINGS COMPLETE WITH SUSPENSION SYSTEM AND RELATED ACCESSORIES AS SHOWN ON DRAWINGS AND AS SPECIFIED, UNLESS NOTED OTHERWISE.

3. SUSPENSION SYSTEM SHALL BE ADEQUATE TO SUPPORT LIGHTING FIXTURES, CEILING GRILLES AND DIFFUSERS AND OTHER NORMAL ACCESSORIES. ALL SYSTEM COMPONENTS SHALL BE FROM A SINGLE MANUFACTURER.

4. INSTALL CEILING AND SUSPENSION SYSTEMS IN STRICT ACCORDANCE WITH MANUFACTURER'S RECOMMENDATIONS. FINISHED CEILING SHALL BE LEVEL WITH JOINTS SNUG AND SQUARE, AND TILES OR PANELS IN PERFECT CONDITION.

5. FURNISH TO TENANT NOT LESS THAN 2 UNOPENED BOXES OF EACH TYPE OF TILE USED

Designed By:

Moffett Construction
1535 American Way
Cedar Hill, TX 76001

PROJECT:
3020 BROADWAY ST
SAN ANTONIO, TX 78209

ISSUE:
4-26-19

GENERAL SPECIFICATIONS

A7

DIVISION 9 - FINISHES (CONTINUED)

VINYL COMPOSITION TILE AND RESILIENT WALL BASE

1. THE CONTRACTOR SHALL PROVIDE AND INSTALL ALL FLOORING, BASE, TRANSITION STRIPS AND ACCESSORIES AS INDICATED IN THE FINISH SCHEDULE AND/OR AS REQUIRED TO COMPLETE THE INSTALLATION.
2. MAINTAIN TEMPERATURES WITHIN RANGE RECOMMENDED BY MANUFACTURER, BUT NOT LESS THAN 70°F OR MORE THAN 95°F, IN SPACES TO RECEIVE FLOOR TILE FOR 48 HOURS PRIOR TO INSTALLATION, DURING INSTALLATION, AND 48 HOURS AFTER INSTALLATION.
3. INSTALL RESILIENT PRODUCTS AFTER OTHER FINISHING OPERATIONS, INCLUDING PAINTING, HAVE BEEN COMPLETED.
4. PREPARE SUBSTRATES ACCORDING TO MANUFACTURER'S WRITTEN RECOMMENDATIONS TO ENSURE ADHESION OF RESILIENT PRODUCTS.
5. MOVE RESILIENT PRODUCTS AND INSTALLATION MATERIALS INTO SPACE WHERE THEY WILL BE INSTALLED AT LEAST 48 HOURS IN ADVANCE OF INSTALLATION. DO NOT INSTALL UNTIL RESILIENT PRODUCTS ARE THE SAME TEMPERATURE AS THE SPACE WHERE THEY ARE TO BE INSTALLED.
6. APPLY WALL BASE TO WALLS, COLUMNS, PILASTERS, CASEWORK AND CABINETS IN TOE SPACES, AND OTHER PERMANENT FIXTURES IN ROOMS AND AREAS WHERE BASE IS REQUIRED AND NOT OTHERWISE INDICATED.
7. INSTALL WALL BASE IN LENGTHS AS LONG AS PRACTICABLE WITHOUT GAPS AT SEAMS AND WITH TOPS OF ADJACENT PIECES ALIGNED.
8. THE CONTRACTOR SHALL PERFORM THE FOLLOWING OPERATIONS IMMEDIATELY AFTER COMPLETING RESILIENT PRODUCT INSTALLATION:

   A. REMOVE ADHESIVE AND OTHER BLEMISHES FROM EXPOSED SURFACES.

   B. SWEEP AND VACUUM SURFACES THOROUGHLY.

   C. DAMP-MOP SURFACES TO REMOVE MARKS AND SOIL.

   D. APPLY WAX FINISH RECOMENDED BY MANUFACTURER.

FLOOR COVERING

1. THE CONTRACTOR SHALL COORDINATE INSTALLATION OF ALL FLOOR COVERINGS AS INDICATED ON THE FINISH SCHEDULE AND AS NOTED ON THE DRAWINGS FOR LOCATION AND EXTENT.
2. CONTRACTOR TO FLASH PATCH OR SCRAPE AS REQUIRED TO PROVIDE A SMOOTH LEVEL FLOOR SURFACE FREE FROM HOLES, CRACKS OR BUMPS.
3. FILL ALL CRACKS, JOINTS, ETC. IN SUB-FLOOR WITH CRACK FILLER APPROVED BY FLOORING MANUFACTURER. INSTALL ALL MATERIALS WITH WATERPROOF TYPE
4. INSTALL ADHESIVES AS RECOMMENDED BY FLOORING MANUFACTURER FOR SURFACE INVOLVED.
5. CONTRACTOR TO "FLOAT UP" SUB-FLOOR AS REQUIRED TO BRING CARPET OR COMPOSITION TILE FLUSH WITH ADJACENT FINISHED FLOORS.

DIRECT GLUE CARPETING

1. CONTRACTOR TO CONFIRM THAT SLAB CONDITIONS MEET OR EXCEED MINIMUM MANUFACTURER'S REQUIREMENTS FOR INSTALLATION.
2. FLOORING TO BE INSTALLED IN STRICT COMPLIANCE WITH MANUFACTURER'S SPECIFICATIONS.
3. CARPET PATTERN INSTALLATION REQUIREMENTS ARE NOTED IN THE DRAWINGS.
4. BASE LAYER OF GYPSUM BOARD), COMPLY WITH GYPSUM BOARD MANUFACTURER'S WRITTEN RECOMMENDATIONS AND TEMPORARILY BRACE OR FASTEN GYPSUM PANELS UNTIL FASTENING ADHESIVE HAS SET.
5. BASE IS REQUIRED AND NOT OTHERWISE INDICATED.
6. INSTALL WALL BASE IN LENGTHS AS LONG AS PRACTICABLE WITHOUT GAPS AT SEAMS AND WITH TOPS OF ADJACENT PIECES ALIGNED.
7. THE CONTRACTOR SHALL PERFORM THE FOLLOWING OPERATIONS IMMEDIATELY AFTER COMPLETING CARPETING INSTALLATION:

   A. REMOVE ADHESIVE AND OTHER BLEMISHES FROM EXPOSED SURFACES.

   B. VACUUM SURFACES THOROUGHLY.

   C. SPOT-CLEAN AREAS AS REQUIRED TO REMOVE MARKS AND SOIL.

PAINT

1. THE CONTRACTOR IS RESPONSIBLE FOR VISITING AND INSPECTING THE SPACE PRIOR TO THE APPLICATION OF ANY PAINT OR FINISHING MATERIAL. IF ANY NEW OR EXISTING SURFACE TO BE FINISHED CANNOT BE PUT IN PROPER CONDITION BY CUSTOMARY CLEANING, SANDING AND PUTTYING OPERATIONS, THE GENERAL CONTRACTOR SHALL IMMEDIATELY NOTIFY THE OWNER OR ASSUME RESPONSIBILITY FOR, AND RECTIFY ANY UNSATISFACTORY RESULTING FINISH.
2. UNLESS SPECIFICALLY STATED OTHERWISE, COVER ALL SURFACES THOROUGHLY. IF THE NUMBER OF COATS SPECIFIED DOES NOT ACCOMPLISH THE INTENT, THEN APPLY ADDITIONAL COATS OF SPECIFIED MATERIAL TO GIVE SATISFACTORY COVERAGE. SEE FINISH SCHEDULE.
3. STAINLESS STEEL, ALUMINUM, CHROME PLATED SURFACES, AND ALL OTHER BRIGHT METAL FINISHES SHALL NOT BE PAINTED UNLESS OTHERWISE NOTED.
4. USE ONLY THE PAINT AND RELATED MATERIALS OF THE MANUFACTURER(S) SPECIFIED.
5. ALL PAINTED SURFACES SHALL BE PREPARED IN STRICT ACCORDANCE WITH MANUFACTURER'S SPECIFICATIONS (ESPECIALLY IN REGARD TO PRIMING EXISTING SURFACES).
6. PAINTED GYPSUM BOARD TO RECEIVE ONE COAT LATEX PRIMER AND TWO COATS OF SPECIFIED PAINT. TINT PRIMER TO APPROXIMATE SHADE OF THE FINAL COAT. TOUCH UP ALL SUCTION SPOTS OR HOT SPOTS AFTER APPLICATION OF FIRST COAT AND BEFORE APPLYING SECOND COAT TO PRODUCE AN EVEN RESULT IN THE FINISH COAT. DRY ALL COATS THOROUGHLY BEFORE APPLYING SUCCEEDING COATS. FOLLOW MANUFACTURER'S RECOMMENDATIONS FOR RE-COAT TIME. SEAL ALL DRYWALL SURFACES BEHIND MIRRORS.
7. FOR ALL METAL SURFACES TO BE PAINTED, WASH ALL METAL SURFACES WITH MINERAL SPIRITS TO REMOVE ALL DIRT AND GREASE BEFORE APPLYING FINISH. WHERE RUST AND/OR SCALE IS PRESENT, WIRE BRUSH AND SAND CLEAN BEFORE APPLYING FINISH.
8. PUTTY ALL NAIL HOLES, COUNTERSUNK SCREWS, BOLTS, CRACKS, ETC. BEFORE APPLYING FINISH.
9. SAND ALL WOOD SURFACES SMOOTH AND EVEN BEFORE APPLYING FINISH.
10. BEFORE STARTING FINISH WORK, REMOVE HARDWARE, ACCESSORIES, PLATES, LIGHTING FIXTURES, AND SIMILAR ITEMS OR PROVIDE AMPLE PROTECTION FOR SUCH ITEMS.
11. WOOD DOORS: SEAL BOTTOMS, TOPS, AND EDGES. SAND ALL WOOD DOORS BEFORE FINISHING AND BETWEEN COATS.
12. PAINT ALL RADIATION COVERINGS, CONVECTORS, REGISTERS, LOUVERS, GRILLES, EXPOSED PIPING, ACCESS DOORS, VENTS, FIRE EXTINGUISHER CABINETS, EQUIPMENT MOUNTING BOARDS, ETC., UNLESS OTHERWISE NOTED. PAINT TO MATCH ADJACENT WORK UNLESS OTHERWISE NOTED. IF PREFINISHED TO MATCH WALL, DO NOT PAINT.
13. SAND ENAMELED FINISHES APPLIED TO WOOD OR METAL BETWEEN COATS WITH FINE SANDPAPER TO PRODUCE SMOOTH FINISH.
14. MAKE FINISH WORK UNIFORM AND SMOOTH, FREE OF RUNS, SAGS, DEFECTIVE BRUSHING AND CLOGGING. MAKE EDGES OF PAINT ADJOINING OTHER MATERIALS OR COLORS SHARP AND CLEAN WITHOUT OVERLAPPING.
15. FIELD PAINTING, EXCEPT TOUCH-UP, WILL NOT BE ALLOWED ON ITEMS SPECIFIED TO BE COMPLETELY FINISHED AT FACTORY UNLESS SPECIFICALLY DESIGNATED. GENERAL CONTRACTOR SHALL LEAVE SUFFICIENT MATERIAL FOR TOUCH-UP OF FINISHES.
16. THE CONTRACTOR SHALL LEAVE IN THE TENANT SPACE A MINIMUM OF ONE (1) GALLON OF EACH WALL PAINT USED ON THE PROJECT.
17. THE CONTRACTOR SHALL REMOVE ALL PAINT RAGS, EMPTY CANS AND WASTE FROM THE TENANT SPACE EACH DAY.
18. CLEANING AND TOUCH-UP: IN ADDITION TO THE CLEANING REQUIRED IN THE "AIA GENERAL CONDITIONS" THE CONTRACTOR SHALL UPON COMPLETION: (1) REMOVE ALL PAINT AND/OR PASTE WHERE IT HAS BEEN SPILLED, SPLASHED OR SPLATTERED (INCLUDING FIXTURES, GLASS, HARDWARE, CARPETING, ETC.). (2) TOUCH UP AND RESTORE THE FINISH OF ANY ITEM MARRED OR DAMAGED DURING FINISH OPERATIONS OR CLEAN-UP.
19. STANDARD COATING TERMS DEFINED IN ASTM D 16 APPLY TO THIS SECTION:

   A. FLAT REFERS TO A LUSTERLESS OR MATTE FINISH WITH A GLOSS RANGE BELOW 15 WHEN MEASURED AT AN 85-DEGREE METER.

   B. EGGSHELL REFERS TO LOW-SHEEN FINISH WITH A GLOSS RANGE BETWEEN 20 AND 35 WHEN MEASURED AT A 60-DEGREE METER.

   C. SEMIGLOSS REFERS TO MEDIUM-SHEEN FINISH WITH A GLOSS RANGE BETWEEN 35 AND 70 WHEN MEASURED AT A 60-DEGREE METER.

   D. FULL GLOSS REFERS TO HIGH-SHEEN FINISH WITH A GLOSS RANGE MORE THAN 70 WHEN MEASURED AT A 60-DEGREE METER.

QUALITY ASSURANCE

1. APPLICATOR QUALIFICATIONS: A FIRM OR INDIVIDUAL EXPERIENCED IN APPLYING PAINTS AND COATINGS SIMILAR IN MATERIAL, DESIGN, AND EXTENT TO THOSE INDICATED FOR THIS PROJECT, WHOSE WORK HAS RESULTED IN APPLICATIONS WITH A RECORD OF SUCCESSFUL IN-SERVICE PERFORMANCE.
2. SOURCE LIMITATIONS: OBTAIN PRIMERS FOR EACH COATING SYSTEM FROM THE SAME MANUFACTURER AS THE FINISH COATS.

PAINT MATERIALS, GENERAL

1. MATERIAL COMPATIBILITY: PROVIDE BLOCK FILLERS, PRIMERS, AND FINISH-COAT MATERIALS THAT ARE COMPATIBLE WITH ONE ANOTHER AND WITH THE SUBSTRATES INDICATED UNDER CONDITIONS OF SERVICE AND APPLICATION, AS DEMONSTRATED BY MANUFACTURER BASED ON TESTING AND FIELD EXPERIENCE.
2. MATERIAL QUALITY: PROVIDE MANUFACTURER'S BEST-QUALITY PAINT MATERIAL OF THE VARIOUS COATING TYPES SPECIFIED THAT ARE FACTORY FORMULATED AND RECOMMENDED BY MANUFACTURER FOR APPLICATION INDICATED. PAINT MATERIAL CONTAINERS NOT DISPLAYING MANUFACTURER'S PRODUCT IDENTIFICATION WILL NOT BE ACCEPTABLE.
3. INTERIOR GYPSUM BOARD PRIMER: FACTORY-FORMULATED LATEX-BASED PRIMER FOR INTERIOR APPLICATION.
4. INTERIOR WOOD PRIMER FOR ACRYLIC-ENAMEL AND SEMIGLOSS ALKYD-ENAMEL FINISHES: FACTORY-FORMULATED ALKYD- OR ACRYLIC-LATEX-BASED INTERIOR WOOD PRIMER.
5. INTERIOR FERROUS-METAL PRIMER: FACTORY-FORMULATED QUICK-DRYING RUST-INHIBITIVE ALKYD-BASED METAL PRIMER.
6. EXAMINE SUBSTRATES, AREAS, AND CONDITIONS, WITH APPLICATOR PRESENT, FOR COMPLIANCE WITH REQUIREMENTS FOR PAINT APPLICATION.

   A. PROCEED WITH PAINT APPLICATION ONLY AFTER UNSATISFACTORY CONDITIONS HAVE BEEN CORRECTED AND SURFACES RECEIVING PAINT ARE THOROUGHLY DRY.

   B. START OF PAINTING WILL BE CONSTRUED AS APPLICATOR'S ACCEPTANCE OF SURFACES AND CONDITIONS WITHIN A PARTICULAR AREA.

PREPARATION

1. REMOVE HARDWARE AND HARDWARE ACCESSORIES, PLATES, MACHINED SURFACES, LIGHTING FIXTURES, AND SIMILAR ITEMS ALREADY INSTALLED THAT ARE NOT TO BE PAINTED. IF REMOVAL IS IMPRACTICAL OR IMPOSSIBLE BECAUSE OF SIZE OR WEIGHT OF THE ITEM, PROVIDE SURFACE-APPLIED PROTECTION BEFORE SURFACE PREPARATION AND PAINTING.
2. AFTER COMPLETING PAINTING OPERATIONS IN EACH SPACE OR AREA, REINSTALL ITEMS REMOVED USING WORKERS SKILLED IN THE TRADES INVOLVED.
3. CLEANING: BEFORE APPLYING PAINT OR OTHER SURFACE TREATMENTS, CLEAN SUBSTRATES OF SUBSTANCES THAT COULD IMPAIR BOND OF THE VARIOUS COATINGS. REMOVE OIL AND GREASE BEFORE CLEANING.
4. SCHEDULE CLEANING AND PAINTING SO DUST AND OTHER CONTAMINANTS FROM THE CLEANING PROCESS WILL NOT FALL ON WET, NEWLY PAINTED SURFACES.
5. SURFACE PREPARATION: CLEAN AND PREPARE SURFACES TO BE PAINTED ACCORDING TO MANUFACTURER'S WRITTEN INSTRUCTIONS FOR EACH PARTICULAR SUBSTRATE CONDITION AND AS SPECIFIED
6. PROVIDE BARRIER COATS OVER INCOMPATIBLE PRIMERS OR REMOVE AND REPRIME.
7. WOOD: CLEAN SURFACES OF DIRT, OIL, AND OTHER FOREIGN SUBSTANCES WITH SCRAPERS, MINERAL SPIRITS, AND SANDPAPER, AS REQUIRED. SAND SURFACES EXPOSED TO VIEW SMOOTH AND DUST OFF.

   A. SCRAPE AND CLEAN SMALL, DRY, SEASONED KNOTS, AND APPLY A THIN COAT OF WHITE SHELLAC OR OTHER RECOMMENDED KNOT SEALER BEFORE APPLYING PRIMER. AFTER PRIMING, FILL HOLES AND IMPERFECTIONS IN FINISH SURFACES WITH PUTTY OR PLASTIC WOOD FILLER. SAND SMOOTH WHEN DRIED.

   B. PRIME, STAIN, OR SEAL WOOD TO BE PAINTED IMMEDIATELY ON DELIVERY. PRIME EDGES, ENDS, FACES, UNDERSIDES, AND BACK SIDES OF WOOD, INCLUDING CABINETS, COUNTERS, CASES, AND PANELING.

   C. IF TRANSPARENT FINISH IS REQUIRED, BACKPRIME WITH SPAR VARNISH.

   D. BACKPRIME PANELING ON INTERIOR PARTITIONS WHERE MASONRY, PLASTER, OR OTHER WET WALL CONSTRUCTION OCCURS ON BACK SIDE.

   E. SEAL TOPS, BOTTOMS, AND CUTOUTS OF UNPRIMED WOOD DOORS WITH A HEAVY COAT OF VARNISH OR SEALER IMMEDIATELY ON DELIVERY.
8. FERROUS METALS: CLEAN UNGALVANIZED FERROUS-METAL SURFACES THAT HAVE NOT BEEN SHOP COATED; REMOVE OIL, GREASE, DIRT, LOOSE MILL SCALE, AND OTHER FOREIGN SUBSTANCES.

   A. TREAT BARE AND SANDBLASTED OR PICKLED CLEAN METAL WITH A METAL TREATMENT WASH COAT BEFORE PRIMING.

   B. TOUCH UP BARE AREAS AND SHOP-APPLIED PRIME COATS THAT HAVE BEEN DAMAGED. WIRE-BRUSH, CLEAN WITH SOLVENTS RECOMMENDED BY PAINT MANUFACTURER, AND TOUCH UP WITH SAME PRIMER AS THE SHOP COAT.
9. GALVANIZED SURFACES: CLEAN GALVANIZED SURFACES WITH NONPETROLEUM-BASED SOLVENTS SO SURFACE IS FREE OF OIL AND SURFACE CONTAMINANTS. REMOVE PRETREATMENT FROM GALVANIZED SHEET METAL FABRICATED FROM COIL STOCK BY MECHANICAL METHODS.
10. MATERIAL PREPARATION: MIX AND PREPARE PAINT MATERIALS ACCORDING TO MANUFACTURER'S WRITTEN INSTRUCTIONS.

    A. USE ONLY THINNERS APPROVED BY PAINT MANUFACTURER AND ONLY WITHIN RECOMMENDED LIMITS.

APPLICATION

1. APPLY PAINT ACCORDING TO MANUFACTURER'S WRITTEN INSTRUCTIONS. USE APPLICATORS AND TECHNIQUES BEST SUITED FOR SUBSTRATE AND TYPE OF MATERIAL BEING APPLIED.
2. PAINT COLORS, SURFACE TREATMENTS, AND FINISHES ARE INDICATED IN THE PAINT SCHEDULES.
3. DO NOT PAINT OVER DIRT, RUST, SCALE, GREASE, MOISTURE, SCUFFED SURFACES, OR CONDITIONS DETRIMENTAL TO FORMATION OF A DURABLE PAINT FILM.
4. PROVIDE FINISH COATS THAT ARE COMPATIBLE WITH PRIMERS USED.
5. THE TERM "EXPOSED SURFACES" INCLUDES AREAS VISIBLE WHEN PERMANENT OR BUILT-IN FIXTURES, GRILLES, CONVECTOR COVERS, COVERS FOR FINNED-TUBE RADIATION, AND SIMILAR COMPONENTS ARE IN PLACE. EXTEND COATINGS IN THESE AREAS, AS REQUIRED, TO MAINTAIN SYSTEM INTEGRITY AND PROVIDE DESIRED PROTECTION.
6. PAINT SURFACES BEHIND MOVABLE EQUIPMENT AND FURNITURE THE SAME AS SIMILAR EXPOSED SURFACES. BEFORE FINAL INSTALLATION OF EQUIPMENT, PAINT SURFACES BEHIND PERMANENTLY FIXED EQUIPMENT OR FURNITURE WITH PRIME COAT ONLY.
7. PAINT INTERIOR SURFACES OF DUCTS WITH A FLAT, NONSPECULAR BLACK PAINT WHERE VISIBLE THROUGH REGISTERS OR GRILLES.
8. PAINT BACK SIDES OF ACCESS PANELS AND REMOVABLE OR HINGED COVERS TO MATCH EXPOSED SURFACES.
9. FINISH EXTERIOR DOORS ON TOPS, BOTTOMS, AND SIDE EDGES THE SAME AS EXTERIOR FACES.
10. SAND LIGHTLY BETWEEN EACH SUCCEEDING ENAMEL OR VARNISH COAT.
11. SCHEDULING PAINTING: APPLY FIRST COAT TO SURFACES THAT HAVE BEEN CLEANED, PRETREATED, OR OTHERWISE PREPARED FOR PAINTING AS SOON AS PRACTICABLE AFTER PREPARATION AND BEFORE SUBSEQUENT SURFACE DETERIORATION.
12. THE NUMBER OF COATS AND FILM THICKNESS REQUIRED ARE THE SAME REGARDLESS OF APPLICATION METHOD. DO NOT APPLY SUCCEEDING COATS UNTIL PREVIOUS COAT HAS CURED AS RECOMMENDED BY MANUFACTURER. IF SANDING IS REQUIRED TO PRODUCE A SMOOTH, EVEN SURFACE ACCORDING TO MANUFACTURER'S WRITTEN INSTRUCTIONS, SAND BETWEEN APPLICATIONS.
13. OMIT PRIMER OVER METAL SURFACES THAT HAVE BEEN SHOP PRIMED AND TOUCHUP PAINTED.
14. IF UNDERCOATS, STAINS, OR OTHER CONDITIONS SHOW THROUGH FINAL COAT OF PAINT, APPLY ADDITIONAL COATS UNTIL PAINT FILM IS OF UNIFORM FINISH, COLOR, AND APPEARANCE. GIVE SPECIAL ATTENTION TO ENSURE THAT EDGES, CORNERS, CREVICES, WELDS, AND EXPOSED FASTENERS RECEIVE A DRY FILM THICKNESS EQUIVALENT TO THAT OF FLAT SURFACES.
15. ALLOW SUFFICIENT TIME BETWEEN SUCCESSIVE COATS TO PERMIT PROPER DRYING. DO NOT RECOAT SURFACES UNTIL PAINT HAS DRIED TO WHERE IT FEELS FIRM, AND DOES NOT DEFORM OR FEEL STICKY UNDER MODERATE THUMB PRESSURE, AND UNTIL APPLICATION OF ANOTHER COAT OF PAINT DOES NOT CAUSE UNDERCOAT TO LIFT OR LOSE ADHESION.
16. MINIMUM COATING THICKNESS: APPLY PAINT MATERIALS NO THINNER THAN MANUFACTURER'S RECOMMENDED SPREADING RATE TO ACHIEVE DRY FILM THICKNESS INDICATED. PROVIDE TOTAL DRY FILM THICKNESS OF THE ENTIRE SYSTEM AS RECOMMENDED BY MANUFACTURER.
17. PRIME COATS: BEFORE APPLYING FINISH COATS, APPLY A PRIME COAT, AS RECOMMENDED BY MANUFACTURER, TO MATERIAL THAT IS REQUIRED TO BE PAINTED OR FINISHED AND THAT HAS NOT BEEN PRIME COATED BY OTHERS. RECOAT PRIMED AND SEALED SURFACES WHERE EVIDENCE OF SUCTION SPOTS OR UNSEALED AREAS IN FIRST COAT APPEARS, TO ENSURE A FINISH COAT WITH NO BURN-THROUGH OR OTHER DEFECTS DUE TO INSUFFICIENT SEALING.
18. PIGMENTED (OPAQUE) FINISHES: COMPLETELY COVER SURFACES AS NECESSARY TO PROVIDE A SMOOTH, OPAQUE SURFACE OF UNIFORM FINISH, COLOR, APPEARANCE, AND COVERAGE. CLOUDINESS, SPOTTING, HOLIDAYS, LAPS, BRUSH MARKS, RUNS, SAGS, ROPINESS, OR OTHER SURFACE IMPERFECTIONS WILL NOT BE ACCEPTABLE.
19. TRANSPARENT (CLEAR) FINISHES: USE MULTIPLE COATS TO PRODUCE A GLASS-SMOOTH SURFACE FILM OF EVEN LUSTER. PROVIDE A FINISH FREE OF LAPS, RUNS, CLOUDINESS, COLOR IRREGULARITY, BRUSH MARKS, ORANGE PEEL, NAIL HOLES, OR OTHER SURFACE IMPERFECTIONS.

    A. PROVIDE SATIN FINISH FOR FINAL COATS.
20. TREATED FERROUS METAL: COMPLETELY COVER SURFACE AS NECESSARY TO PROVIDE A SMOOTH UNIFORM FINISH.

PROTECTION

1. PROTECT WORK OF OTHER TRADES, WHETHER BEING PAINTED OR NOT, AGAINST DAMAGE FROM PAINTING. CORRECT DAMAGE BY CLEANING, REPAIRING OR REPLACING, AND REPAINTING, AS APPROVED BY ARCHITECT.
2. PROVIDE "WET PAINT" SIGNS TO PROTECT NEWLY PAINTED FINISHES. AFTER COMPLETING PAINTING OPERATIONS, REMOVE TEMPORARY PROTECTIVE WRAPPINGS PROVIDED BY OTHERS TO PROTECT THEIR WORK.

   A. AFTER WORK OF OTHER TRADES IS COMPLETE, TOUCH UP AND RESTORE DAMAGED OR DEFACED PAINTED SURFACES.

DIVISION 10 - SPECIALTIES

TOILET ROOM ACCESSORIES

1. PROVIDE ALL NECESSARY TOILET ROOM ACCESSORIES AS INDICATED ON THE DRAWINGS.
2. COORDINATE ACCESSORY LOCATIONS WITH OTHER WORK TO PREVENT INTERFERENCE WITH CLEARANCES REQUIRED FOR ACCESS BY PEOPLE WITH DISABILITIES, AND FOR PROPER INSTALLATION, ADJUSTMENT, OPERATION, CLEANING, AND SERVICING OF ACCESSORIES.
3. PROVIDE INSULATING PIPE COVERING FOR SUPPLY AND DRAIN PIPING ASSEMBLIES THAT PREVENT DIRECT CONTACT WITH AND BURNS FROM PIPING, AND ALLOW SERVICE ACCESS WITHOUT REMOVING COVERINGS.
4. PROVIDE UNIVERSAL KEYS FOR INTERNAL ACCESS TO ACCESSORIES FOR SERVICING AND RESUPPLYING. PROVIDE MINIMUM OF SIX KEYS TO OWNER'S REPRESENTATIVE.
5. INSTALL ACCESSORIES ACCORDING TO MANUFACTURER'S WRITTEN INSTRUCTIONS, USING FASTENERS APPROPRIATE TO SUBSTRATE INDICATED AND RECOMMENDED BY UNIT MANUFACTURER. INSTALL UNITS LEVEL, PLUMB, AND FIRMLY ANCHORED IN LOCATIONS AND AT HEIGHTS INDICATED.

TOILET ROOM SIGNAGE

1. CONTRACTOR TO PROVIDE AND INSTALL SPECIFIED, ADA COMPLIANT, TOILET ROOM SIGNAGE AT EACH TOILET ROOM. SIGNAGE TO BE INSTALLED AT DIMENSIONED LOCATIONS PROVIDED IN THE DRAWINGS.

DIVISION 15 - MECHANICAL & PLUMBING

1. REFER TO MECHANICAL & PLUMBING DRAWINGS IN THIS SET FOR SPECIFICATIONS.

DIVISION 16 - ELECTRICAL

1. REFER TO ELECTRICAL DRAWINGS IN THIS SET FOR SPECIFICATIONS.

MOFFETT CONSTRUCTION

Designed By:
Moffett Construction
1535 American Way
Cedar Hill, TX 76001

PROJECT:
3020 BROADWAY ST
SAN ANTONIO, TX 78209

ISSUE:
4-26-19

GENERAL SPECIFICATIONS

A8

ACCESSIBILITY STANDARDS

*** REFER TO SPECIAL ACCESSIBILITY REQUIREMENTS NOTES. ***

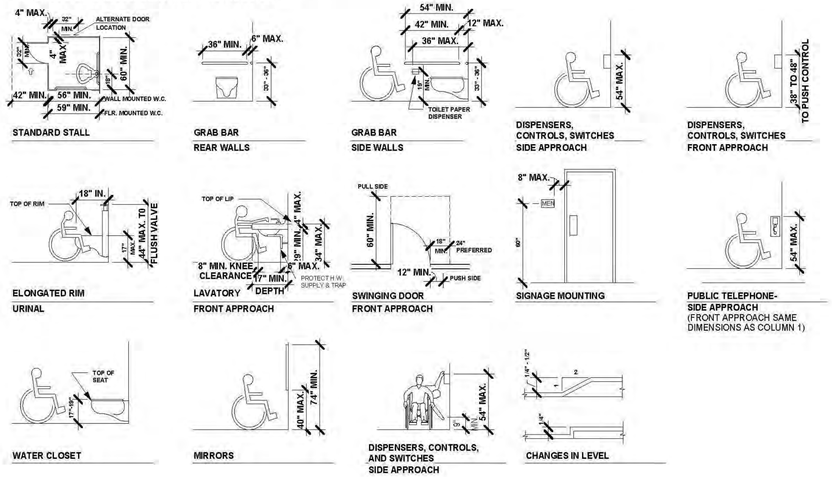

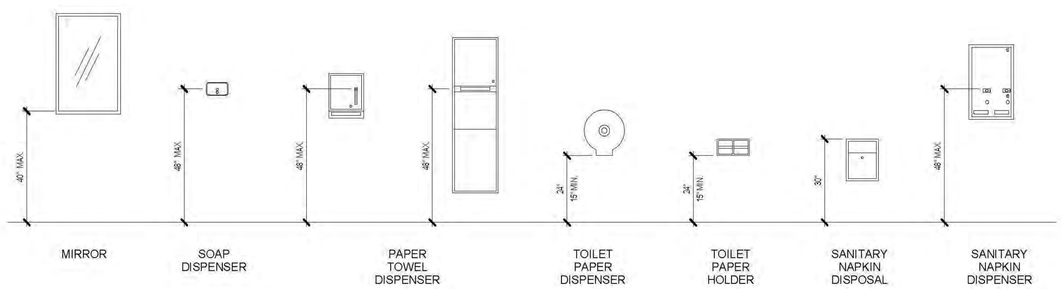

TYPICAL TOILET ACCESSORIES MOUNTING HEIGHTS

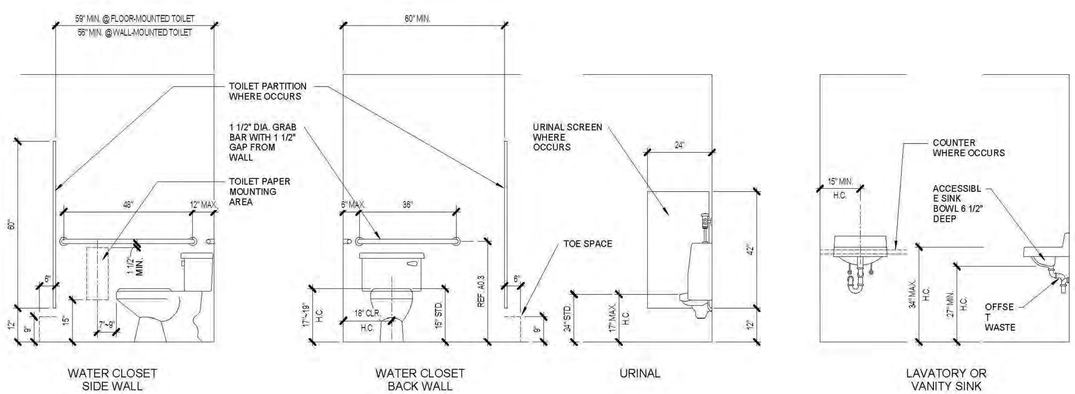

TYPICAL PLUMBING FIXTURES AND ACCESSORIES MOUNTING HEIGHTS

GENERAL ACCESSIBILITY NOTES

1. **DOOR HARDWARE:** DOORS SHALL HAVE LEVER-OPERATED MECHANISM, PUSH TYPE MECHANISMS, OR U-SHAPED HANDLES.

   HANDLE PULLS, LATCHES, LOCKS AND OTHER OPERATING DEVICES ON ACCESSIBLE DOORS SHALL HAVE A SHAPE THAT IS EASY TO GRASP WITH ONE HAND AND DOES NOT REQUIRE TIGHT GRASPING, TIGHT PINCHING, OR TWISTING OF THE WRIST TO OPERATE.

   MOUNTING HEIGHT: HARDWARE REQUIRED FOR ACCESSIBLE DOOR PASSAGE SHALL BE MOUNTED NO HIGHER THAN 48"ABOVE FINISHED FLOOR.

   CLOSER OPERATION: THE SWEEP PERIOD OF A CLOSER SHALL BE ADJUSTED SO THAT FROM AN OPEN POSITION OF 70 DEGREES, THE DOOR WILL TAKE AT LEAST 3 SECONDS TO MOVE TO A POINT 3" FROM THE LATCH, MEASURED TO THE LEADING EDGE OF THE DOOR.

   THE MAXIMUM FORCE FOR PUSHING OR PULLING OPEN A DOOR SHALL BE AS FOLLOWS:
   - (A) EXTERIOR HINGED DOOR: NO REPLACEMENT
   - (B) INTERIOR HINGED DOORS: 5 LBF
   - (C) SLIDING OR FOLDING DOORS: 5 LBF

2. CONTROLS AND OPERATING MECHANISM:
   HEIGHT: SWITCHES, THERMOSTATS, CONTROLS, DISPENSERS, RECEPTACLES, AND THE HIGHEST OPERABLE EQUIPMENT SHALL BE PLACED NO HIGHER THAN 48"ABOVE THE FLOOR.
   EXCEPTION: THESE REQUIREMENTS DO NOT APPLY WHERE THE USE OF SPECIAL EQUIPMENT DICTATES OTHERWISE OR WHERE ELECTRICAL AND COMMUNICATIONS SYSTEMS RECEPTACLES ARE NOT NORMALLY INTENDED FOR THE USE BY BUILDING OCCUPANTS.

   FLUSH CONTROLS SHALL BE HAND OPERATED OR AUTOMATIC. CONTROLS FOR FLUSH VALVES SHALL BE MOUNTED ON THE WIDE SIDE OF THE TOILET AREAS NO MORE THAN 44" ABOVE THE FLOOR.

   OPERATION: CONTROLS AND OPERATING MECHANISM SHALL BE OPERABLE WITH ONE HAND AND SHALL NOT REQUIRE TIGHT GRASPING, PINCHING, OR GREATER THAN 5 LBF.

3. **GRAB BARS:**
   THE OUTSIDE DIAMETER OR WIDTH OF THE GRIPPING SURFACES OF A HANDRAIL OR GRAB SHALL BE 1-1/4" TO 1-1/2", OR THE SHAPE SHALL PROVIDE AN EQUIVALENT GRIPPING SURFACE.

   IF HANDRAILS OR GRAB BARS ARE MOUNTED ADJACENT TO A WALL, THE SPACE BETWEEN THE WALL AND THE GRAB BAR SHALL BE 1-1/2".

   BENDING STRESS IN A GRAB BAR OR SEAT INDUCED BY THE MAXIMUM BENDING MOMENT FROM THE APPLICATION OF 250 LBF. SHALL BE LESS THAN THE ALLOWABLE STRESS FOR THE MATERIAL OF THE GRAB BAR OR SEAT.

   SHEAR STRESS INDUCED A GRAB BAR OR SEAT BY THE APPLICATION OF 250 LBF. SHALL BE LESS THAN THE ALLOWABLE SHEAR STRESS FOR THE MATERIAL OF THE GRAB BAR OR SEAT.

   SHEAR STRESS INDUCED IN A FASTENER OR MOUNTING DEVICE FROM THE APPLICATION OF 250 LBF. SHALL BE LESS THAN THE ALLOWABLE LATERAL LOAD OF EITHER THE FASTENER OR MOUNTING DEVICE OR THE SUPPORTING STRUCTURE WHICHEVER IS THE SMALLER ALLOWABLE LOAD.

   TENSILE FORCE INDUCED IN A FASTENER BY A DIRECT TENSION FORCE OF 250 LBF PLUS THE MAXIMUM MOMENT FROM THE APPLICATION OF 250 LBF. SHALL BE LESS THAN THE ALLOWABLE WITHDRAWAL LOAD BETWEEN THE FASTENER AND THE SUPPORTING STRUCTURE.

   ROTATION OF GRAB BARS WITHIN THEIR FITTINGS IS NOT ACCEPTABLE.

   SHARP OR ABRASIVE ELEMENTS ARE NOT ACCEPTABLE FOR A HANDRAIL OR GRAB BAR OR ANY WALL OR OTHER SURFACE ADJACENT TO ITS EDGES.

4. **SIGNAGE:**
   THE WIDTH-TO-HEIGHT RATIO OF LETTERS AND NUMBERS ON SIGNS SHALL HAVE BETWEEN 3:5 AND 1:1 AND A STROKE -WIDTH-TO-HEIGHT RATIO BETWEEN 1:5 AND 1:10 USING AN UPPER-CASE "X" FOR MEASUREMENT/ LOWER CASE LETTERS ARE PERMITTED.

   OVERHEAD SIGN CHARACTERS AND NUMBERS SHALL BE SIZED ACCORDING TO THE VIEWING DISTANCE FROM WHICH THEY ARE TO READ. FOR SUSPENDED OR PROJECTED OVERHEAD SIGNS, THE MINIMUM CHARACTER HEIGHT IS 3".

   BRAILLE CHARACTERS AND PICTORIAL SYMBOL SIGNS (PICTOGRAMS) SHALL BE RAISED 1/32", UPPER CASE, SAN SERIF OR SIMPLE SERIF TYPE AND SHALL BE ACCOMPANIED WITH GRADE 2 BRAILLE. RAISED CHARACTERS SHALL BE AT LEAST 5/8" HIGH, BUT NO HIGHER THAN 2". PICTOGRAMS SHALL BE ACCOMPANIED BY THE EQUIVALENT VERBAL DESCRIPTION PLACED DIRECTLY BELOW THE PICTOGRAM. THE BORDER DIMENSION OF THE PICTOGRAM SHALL BE 6" MINIMUM IN HEIGHT.

   FINISH: THE CHARACTERS AND BACKGROUND OF SIGNS SHALL BE EGGSHELL, MATTE, OR OTHER NON GLARE-FINISH. CHARACTERS AND SYMBOLS SHALL CONTRAST WITH THEIR BACKGROUND.

   PERMANENT IDENTIFICATION SIGNS PROVIDED FOR ROOM AND SPACES, SIGN SHALL BE INSTALLED ON THE WALL ADJACENT TO THE LATCH SIDE OF THE DOOR. WHERE THERE IS NO WALL SPACE TO THE LATCH SIDE OF THE DOOR, INCLUDING AT DOUBLE LEAF DOORS, SIGNS SHALL BE PLACED ON THE NEAREST ADJACENT WALL. MOUNTING HEIGHT SHALL BE 60" ABOVE FINISH FLOOR TO THE CENTERLINE OF THE SIGN.

   MOUNTING LOCATION FOR REACH SIGNAGE SHALL BE SO THAT A PERSON MAY APPROACH WITHIN 3" OF SIGNAGE WITHOUT ENCOUNTERING PROTRUDING OBJECTS OR STANDING WITHIN THE SWING OF A DOOR.

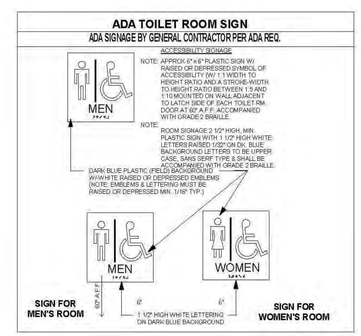

MOFFETT CONSTRUCTION

Designed By:
Moffett Construction
1535 American Way
Cedar Hill, TX 76001

PROJECT:
3020 BROADWAY ST
SAN ANTONIO, TX 78209

ISSUE:
4-26-19

ADA/TAS SPECS & INFO

A9

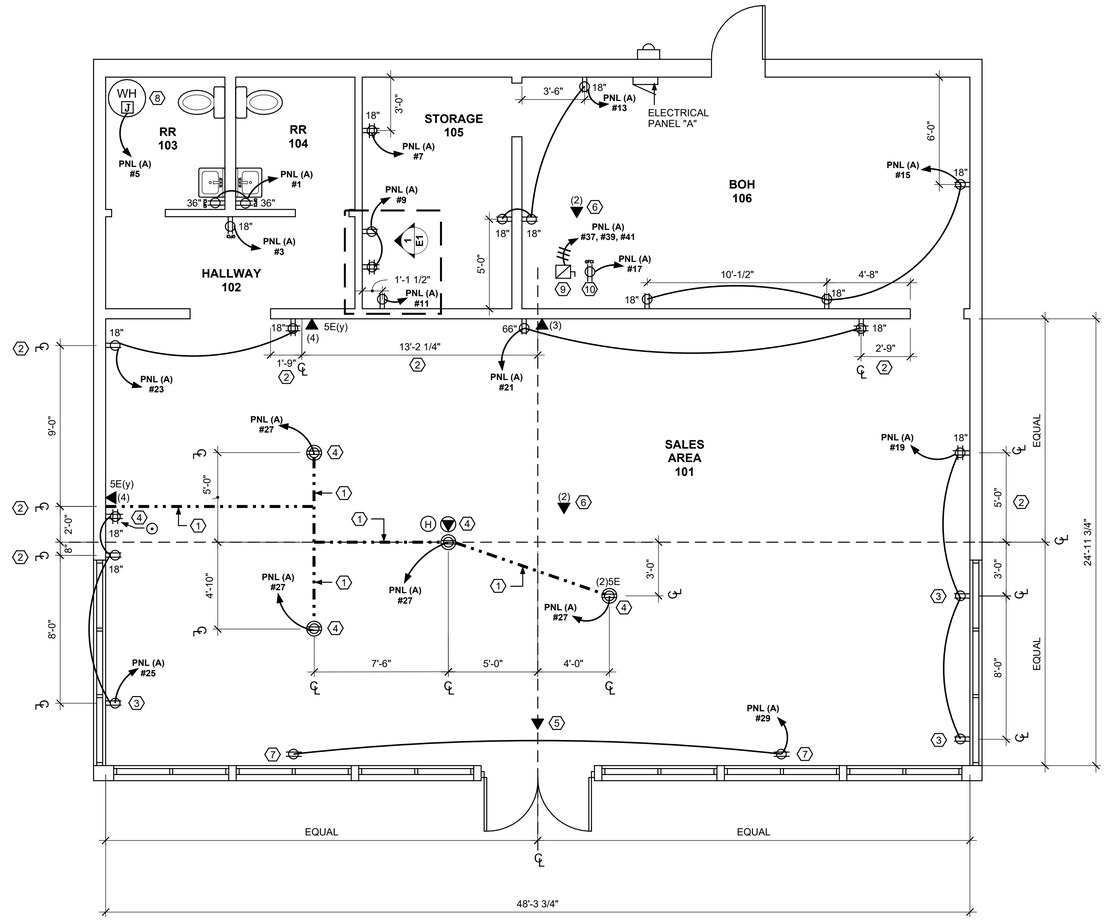

E1 SCALE : 1/4" = 1'
ELECTRICAL POWER PLAN

I.T. RACK - KEYED NOTES

GC - GENERAL CONTRACTOR
EC - ELECTRICAL CONTRACTOR

1. GC SHALL EXTEND EXISTING 2" CONDUIT WITH PULL STRING AND BUSHING FROM IT RACK AREA TO EXISTING WEATHER HEAD PROVIDED BY LANDLORD FOR SATELLITE. FIELD VERIFY EXACT LOCATIONS AND ROUTING IN FIELD. COORDINATE INSTALLATION WITH AT&T CONSTRUCTION MANAGER. COORDINATE WITH LANDLORD ROOFER IF NOT EXISTING.
2. EC SHALL TERMINATE DATA CABLING TO DATA RACK AS IDENTIFIED.
3. EC SHALL PROVIDE L5-30R 30A, 120V SIMPLEX RECEPTACLE.
4. EC SHALL PROVIDE QUADPLEX.
5. EC SHALL PROVIDE 24" X 1" BUSBAR. GC SHALL ROUTE A #6 GROUND FROM BUSBAR FOR CONNECTION TO ELECTRICAL SYSTEM GROUND.
6. GC SHALL PROVIDE AND EXTEND 3" CONDUIT WITH PULL STRING AND BUSHING FROM IT RACK AREA TO EXISTING PHONE SERVICES. FIELD VERIFY EXACT LOCATION AND ROUTING IN FIELD. COORDINATE INSTALLATION WITH AT&T CONSTRUCTION MANAGER.
7. EC SHALL PROVIDE DUPLEX(S) IF OPTIONAL IPAD CHARGING STATIONS ARE UTILIZED.
8. EC SHALL PROVIDE FLUSH DEVICE BOX AT TYCO CABLING WITH CONDUIT/BUSHING AND PULL STRING STUBBED ABOVE FINISHED CEILING. PROVIDE BLANK COVER PLATE WITH ½" HOLE DRILLED IN THE CENTER.
9. GC SHALL PROVIDE AND EXTEND 2" CONDUIT WITH PULL STRING AND BUSHING FROM IT RACK AREA FOR AUDIO CABLING. VERIFY EXACT LOCATION AND ROUTING IN FIELD.
10. GC SHALL PROVIDE SIX 1-7/8" W X 2-3/8"D CABLE DISTRIBUTION D-RINGS.

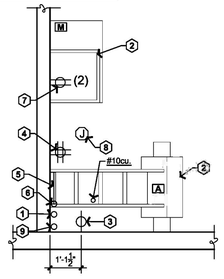

1 **ENGLARGED IT RACK PLAN** N.T.S.

PROVIDED BY VENDOR

- A LADDER TRAY TO RACK.
- B FLOOR MOUNTED EQUIPMENT RACK.
- C 4' POWER STRIP.
- D VERTICAL WIRE MANAGEMENT.
- E DUMMY SECURITY PANEL MOUNTED.
- F RJ2IX EXTENSION OF ALARM LINE, JUST ABOVE CEILING WHERE LOW-VOLTAGE CABLING PENETRATION OCCURS. LABEL JACK WITH ONLY THE POTS LINE ASSOCIATED WITH IT.
- G SECURITY PANEL MOUNTED ABOVE CEILING
- H TI SMART JACK/ETHERNET CONNECTION.
- J LEC NETWORK INTERFACE BLOCK, RJ2IX OR 66 BLOCK.
- K WALL MOUNTED EQUIPMENT RACK. LOCATION AND EQUIPMENT ARE FOR REFERENCE ONLY. SYSTEM IS BY AUTHORIZED RETAILER.
- L 2' POWER STRIP WITH 15' CORD.
- M IPAD CHARGING STATIONS. SYSTEM IS OPTIONAL BY AUTHORIZED RETAILER. NOT INCLUDED IN AT&T PROVIDED KIT OF PARTS.

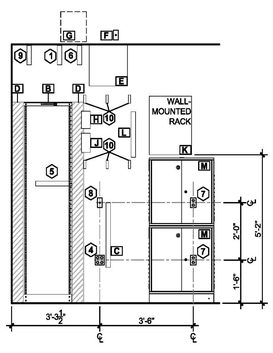

2 **IT RACK ELEVATION** N.T.S.

POWER / DATA PLAN GENERAL NOTES

1. ELECTRICAL AND DATA INFORMATION IS SHOWN FOR REFERENCE ONLY. ELECTRICAL ENGINEERING PLANS ARE REQUIRED FOR CONSTRUCTION.
2. CENTERLINES ARE USED TO LAYOUT SALES AREA FIXTURES, POWER / DATA OUTLETS, SUSPENDED CEILING SYSTEM AND LIGHT FIXTURES. CONTRACTOR IS TO MARK AND VERIFY ALL CENTERLINES SHOWN ON THESE DRAWINGS PRIOR TO START OF CONSTRUCTION. CONTACT DRS ARCHITECTS & PLANNERS, P.C. IMMEDIATELY IF THERE ARE ANY DIMENSIONAL DISCREPANCIES THAT CONFLICT WITH THE DESIGN INTENT SHOWN ON THESE DRAWINGS.
3. THE CENTERLINE OF ALL WALL OUTLETS IS TO BE AT 1'-3" ABOVE FINISHED FLOOR, UNLESS NOTED OTHERWISE.
4. ALL EXISTING ELECTRICAL OUTLETS, DATA OUTLETS AND JUNCTION BOXES ARE TO BE REMOVED, UNLESS NOTED OTHERWISE. PATCH AND REPAIR ANY OPENINGS IN WALLS IN PREPARATION FOR NEW SCHEDULED FINISHES. SPECIFIED DEVICES CAN REMAIN ONLY IF:
   - ELECTRICAL AND DATA OUTLETS ARE COMPLETELY COVERED BY AT&T FIXTURES.
   - JUNCTION BOXES ARE COMPLETELY COVERED BY AT&T FIXTURES.
6. ALL NEW AND EXISTING DATA AND ELECTRICAL OUTLETS SHALL HAVE BLACK COVER PLATES ON GRAY WALLS AND WHITE COVER PLATES AT ALL REMAINING LOCATIONS.
7. AUTHORIZED RETAILER MAY INSTALL ADDITIONAL OUTLETS WITHIN THE SALES AREA AS NEEDED. EXACT LOCATION AND REQUIREMENTS ARE THE RESPONSIBILITY OF THE ARCHITECT OF RECORD AND ENGINEER OF RECORD.
8. ALL INDICATED FLAT WIRE CONNECTIONS AND OUTLETS ARE REQUIRED BY AT&T STANDARDS FOR SALES AREA FIXTURES. NO SUBSTITUTIONS ARE ALLOWED UNLESS APPROVED IN WRITING BY AT&T PROJECT MANAGER PRIOR TO THE START OF CONSTRUCTION.

POWER / DATA PLAN KEYED NOTES

1. PROVIDE UNDER-CARPET FLAT WIRE CABLE SYSTEM TO FIXTURES INDICATED.
2. DIMENSION IS MEASURED TO THE CENTERLINE OF THE WALL OUTLET GROUP.
3. WALL FIXTURE POWER TO BE SUPPLIED THROUGH EXTENSION CORD CONNECTED TO CLOSEST WALL OUTLET. COORDINATE POWER REQUIREMENTS WITH FIXTURE VENDOR AND AT&T PROJECT MANAGER PRIOR TO FIXTURE INSTALLATION.
4. PROVIDE FLOOR MOUNTED J-BOX, FED WITH UNDER-CARPET FLAT WIRE, AND INCLUDE THE FOLLOWING OUTLETS:
   - AT SALES & SERVICE TABLE: (1) POWER , (1) DATA AND (1) HDMI & USB CONNECTION
   - AT DEVICE TABLES: DATA AND/OR POWER AS INDICATED
   - AT WALL FIXTURE BASE: FLAT WIRE IS TO STUB UP 11" AWAY FROM WALL
5. THIS DATA DROP IS TO BE MOUNTED AT CEILING FOR THE CONNECTION OF SHOPPERTRAK SYSTEM. PROVIDE LOOSE CABLE WITH CRIMPED RJ-45 MALE END ABOVE CEILING READY FOR FINAL CONNECTION AT CEILING-MOUNTED SHOPPERTRAK DEVICE. CABLE IS TO EXTEND TO TELECOMMUNICATIONS BOARD IN BACK OF HOUSE. SHOPPERTRAK SYSTEM IS TO BE PROVIDED AND INSTALLED BY OTHERS.
6. THESE DATA DROPS ARE TO BE INSTALLED ABOVE CEILING FOR THE CONNECTION OF WI-FI ACCESS POINT WITH A DUPLEX ELECTRICAL OUTLET AT THE TELECOMMUNICATIONS BOARD AT BACK OF HOUSE. PROVIDE LOOSE CABLE WITH CRIMPED RJ-45 MALE END ABOVE CEILING. CABLE IS TO EXTEND FROM THIS POINT UP TO TELECOMMUNICATIONS BOARD AT BACK OF HOUSE. AUTHORIZED RETAILER IS TO MARK LOCATION OF JACK ON CEILING TO HELP WI-FI TECHNICIAN DURING INSTALLATION.
7. LOCATION FOR CEILING MOUNT DUPLEX.
8. CIRCUIT FOR WATER HEATER TO BE MOUNTED ABOVE CEILING.
9. LOCATION FOR ROOF TOP RTU 1 DISCONNECT POWER.
10. LOCATION FOR ROOF TOP RTU 1 CONVENIENCE GFCI DUPLEX.

ELECTRICAL PLAN KEY LEGEND

	DUPLEX RECEPTACLE	J	JUNCTION BOX	OS $	OCCUPANCY SENSOR SWITCH
GFCI	GFCI DUPLEX RECEPTACLE		DISCONNECT SWITCH FUSED	3 $	3 WAY SWITCH
	QUAD RECEPTACLE		ELECTRICAL PANEL	DS	DAYLIGHT SENSOR
GFCI	GFCI QUAD RECEPTACLE		2X4 SURFACE MOUNT LIGHT FIXTURE		PENDANT LIGHTING
	CEILING RECEPTACLE		2X2 SURFACE MOUNT LIGHT FIXTURE		RECESSED-SPOT LIGHT
	FLOOR MOUNT DUPLEX		EMERGENCY EXIT W/ BACK UP BATTERY		WALL MOUNT LIGHTING
	FLAT-WIRE CAT 5E DATA OUTLET		EMERGENCY LIGHTS W/ BACK UP BATTERY		STUB UP
	DATA OUTLET	$	SWITCH		UNDER-CARPET FLAT WIRE
T	TIME CLOCK	H	HDMI/USB CONNECTION		

MOFFETT CONSTRUCTION

Designed By:
Moffett Construction
1535 American Way
Cedar Hill, TX 76001

PROJECT:
3020 BROADWAY ST
SAN ANTONIO, TX 78209

ISSUE:
4-26-19

ELECTRICAL FLOOR PLAN

E1

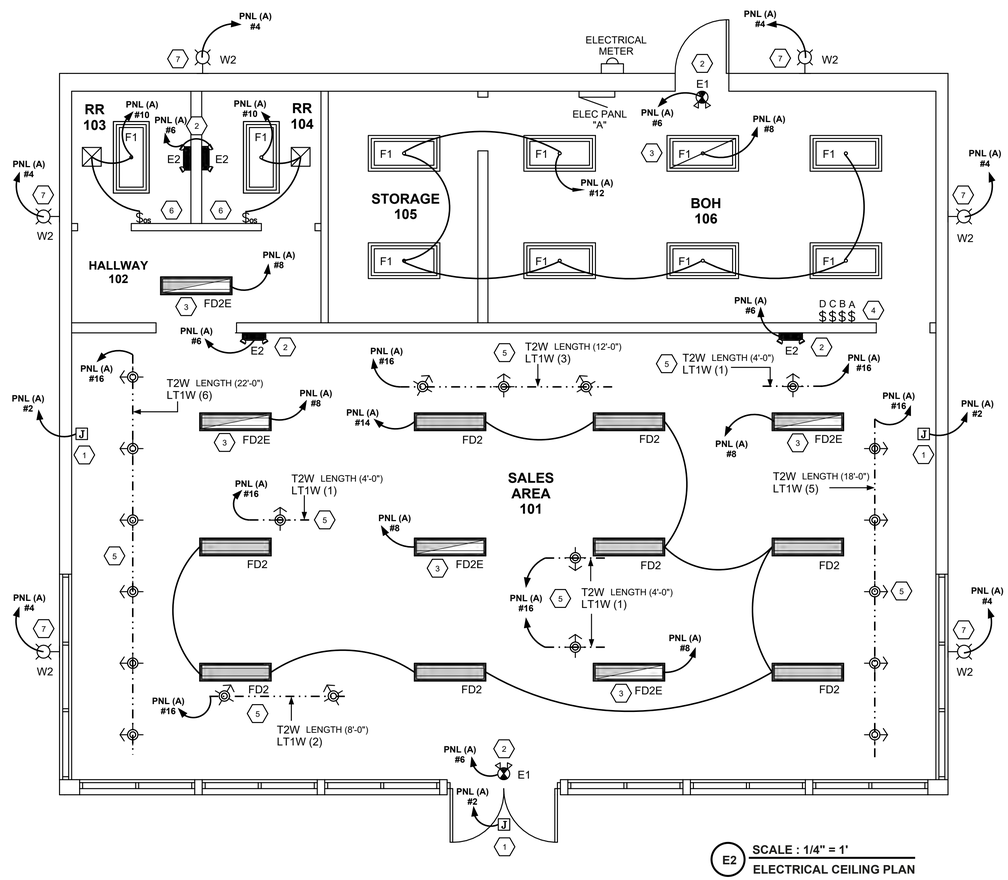

E2 SCALE : 1/4" = 1'
ELECTRICAL CEILING PLAN

GENERAL NOTES

1. ALL ELECTRICAL WORK SHALL BE IN ACCORDANCE W/ THE 2017 NATIONAL ELECTRICAL CODE (NEC) & LOCAL ORDINANCES & AMENDMENTS.
2. COORDINATE THE LOCATION OF ALL ELECTRICAL OUTLETS W/ THE OWNER & CONTRACTORS PRIOR TO INSTALLATION.
2. FIELD VERIFY EXACT LOCATION OF ALL FIXTURES W/ OWNER & CONTRACTORS PRIOR TO INSTALLATION.

LIGHT FIXTURE SCHEDULE

MARK	MANUFACTURER MODEL NUMBER	VOLTAGE WATTS	LAMP TYPE	MOUNTING	DESCRIPTION
F1	LITHONIA 4' INT LED 2ALT45000LM	120/ 42	INTEG LED 5000 K	RECESSED	2X4 LED TROFFER
W1	LITHONIA WALL PACK OWP-LEDP1-50K	120/ 19	INTEG LED 5000 K	SURFACE	EXTERIOR WALL PACK
W2	J&H LED WALL PACK JH-RWP100W-27R	120/ 19	INTEG LED 5000 K	SURFACE	EXTERIOR WALL PACK
E1	LITHONIA EMRG EXIT LIGHT COMBO LHQM-LED-M6	120/ 12	FURNISHED W/ FIXTURE	SURFACE	2-LAMP 90 MIN BATTERY
E2	LITHONIA EMRG LIGHT BUG EYES ELM2-LED-M12	120/ 12	FURNISHED W/ FIXTURE	SURFACE	2-LAMP 90 MIN BATTERY
FD2 FD2E	METALUX 14FP424OC LED 1X4 3500K/5000 LUMEEN	120/ 40	FURNISHED W/ FIXTURE	RECESSED	SALES AREA LGHT FLAT PANEL
T2W	LIGHTOLIER 600N SERIES WH	120	FURNISHED W/ FIXTURE	SURFACE	WHITE TRACK LGHT SALES AREA
LT1W	SOLAIS XD20-25-27K-1400-W 83CRI LED / 1058LM NOMNL	120/ 17	FURNISHED W/ FIXTURE	SURFACE	WHITE TRACK HEAD SALES AREA

ELECTRICAL PLAN KEY LEGEND

- DUPLEX RECEPTACLE
- GFCI DUPLEX RECEPTACLE
- QUAD RECEPTACLE
- GFCI QUAD RECEPTACLE
- CEILING RECEPTACLE
- SPECIAL GFCI RECEPTACLE
- DATA OUTLET
- TIME CLOCK
- JUNCTION BOX
- DISCONNECT SWITCH FUSED
- ELECTRICAL PANEL
- 2X4 SURFACE MOUNT LIGHT FIXTURE
- 2X2 SURFACE MOUNT LIGHT FIXTURE
- EMERGENCY EXIT W/ BACK UP BATTERY
- EMERGENCY LIGHTS W/ BACK UP BATTERY
- SWITCH
- OCCUPANCY SENSOR SWITCH
- 3 WAY SWITCH
- DAYLIGHT SENSOR
- PENDANT LIGHTING
- RECESSED-SPOT LIGHT
- WALL MOUNT LIGHTING

ELECTRICAL PLAN KEY NOTES

1. PROVIDE DEDICATED CIRCUIT W/ TIME CLOCK FOR NEW EXTERIOR SIGNAGE. JBOX TO BE MOUNTED ABOVE CEILING AT CENTER HEIGHT OF SIGN. REFER TO SIGN RENDERING PER OWNER.
2. EMERGENCY LIGHTS TO BE ON THE SAME NON SWITCHED CIRCUIT.
3. NIGHT LIGHTS TO BE ON A 24/7 NON SWITCHED DEDICATED CIRCUIT.
4. LIGHT FIXTURES FOR SALES AREA 101, BOH 106, STORAGE 105 & EXTERIOR LIGHTS, TO BE ON A SWITCH BANK. SEE DETAILS ON 4/E3.
5. TRACK LIGHTING TO BE ON SAME CIRCUIT CONNECTED TO SWITCH BANK. SEE FIXTURE SCHEDULE ON A3 & E2.
6. RESTROOM LIGHTS TO BE SWITCHED BY NEW OCCUPANCY SENSORS.
7. WALL PACKS (W2) TO BE INSTALLED ON EXTERIOR WALL ABOVE 10' AFF. COORDINATE EXACT LOCATION WITH GC & SIGN INSTALLER. WALL PACKS NOT TO INTERFERE WITH SIGNAGE.
8. REFER TO RCP A3 FOR EXACT INTALL LOCATIONS OF ALL LIGHT FIXTURES.

MOFFETT CONSTRUCTION ENGINEERING

Designed By:
Moffett Construction
1535 American Way
Cedar Hill, TX 76001

PROJECT:
3020 BROADWAY ST
SAN ANTONIO, TX 78209

ISSUE:
4-26-19

ELECTRICAL CEILING PLAN

E2

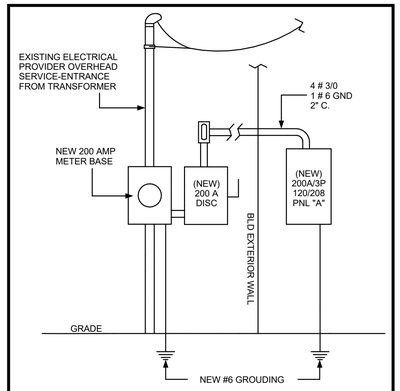

ELECTRICAL RISER DIAGRAM

N.T.S

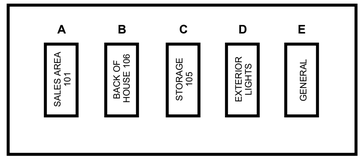

NOTE - T.G.C. SHALL CONNECT EMERGENCY / NIGHT LIGHTING TO LOCAL CIRCUIT ON UNSWITCHED LEG.

4. **SWITCH BANK DETAIL**

PANEL "A"

NEW

120/208 V		3 POLE		4 WIRE		200 AMP/MAX		TOP FED		SURGACE MOUNT		
CKT #	DESCRIPTION	BRKR SIZE	POLE	PHASE A	PHASE B	PHASE C	PHASE C	PHASE B	PHASE A	POLE	BRKR SIZE	DESCRIPTION	CKT #
1	RESTROOM GFCI	20A	1	360					1500	1	20A	EXT SIGNS	2
3	EDF FOUNTAIN	20A	1		600			120		1	20A	WALL PACKS	4
5	WATER HEATER	30A	1			1500	72			1	20A	EMERG LIGHTS	6
7	STORAGE REC	20A	1	360					242	1	20A	NIGHT LIGHTS	8
9	STORAGE REC	20A	1		540			244		1	20A	RESTROOM LTS	10
11	SIMPLEX REC	30A	1			360	294			1	20A	BOH LIGHTS	12
13	BREAKROOM REC	20A	1	540					320	1	20A	SALES LIGHTS	14
15	BREAKROOM REC	20A	1		540			340		1	20A	TRACK LIGHTS	16
17	RTU GFCI	20A	1			180				1	20A	SPARE	18
19	SALES REC	20A	1	720						1	20A	SPARE	20
21	SALES REC	20A	1		540					1	20A	SPARE	22
23	SALES REC	20A	1			540				1	20A	SPARE	24
25	SALES REC	20A	1	720						1	20A	SPARE	26
27	FLAT WIRE REC	20A	1		720					1	20A	SPARE	28
29	CEILING REC	20A	1			360				1	20A	SPARE	30
31	SPARE	20A	1							1	20A	SPARE	32
33	SPARE	20A	1							1	20A	SPARE	34
35	SPARE	20A	1							1	20A	SPARE	36
37	RTU # 1	50A	3	2500						1	20A	SPARE	38
39		50A	3		2500					1	20A	SPARE	40
41		50A	3			2500				1	20A	SPARE	42

"A" TOTAL VA	"B" TOTAL VA	"C" TOTAL VA
7,262 VA	6,144 VA	5,806 VA
61 AMPS	51 AMPS	49 AMPS

7,262 VA / 120V = 61 AMPS

TOTAL PHASE VA = 19,212
TOTAL PHASE AMPS = (161 / 3 PH) = 54 AMPS
TOTAL CONNECTED LOAD = 54 AMPS

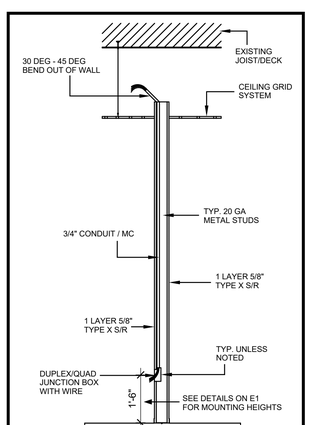

1. **WALL OUTLET DETAIL**

N.T.S

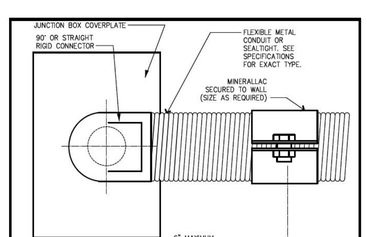

2. **J-BOX CONNECTION DETAIL**

N.T.S

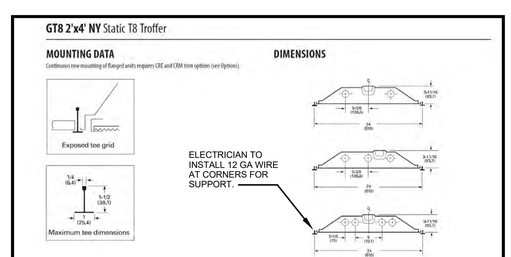

3. **2x4 LIGHT FIXTURE MOUNTING DETAIL**

N.T.S

GENERAL NOTES

1. ALL ELECTRICAL WORK SHALL BE IN ACCORDANCE W/ THE 2017 NATIONAL ELECTRICAL CODE (NEC) & LOCAL ORDINANCES & AMENDMENTS.
2. COORDINATE THE LOCATION OF ALL ELECTRICAL OUTLETS W/ THE OWNER & CONTRACTORS PRIOR TO INSTALLATION.
3. ALL EMERGENCY LIGHTS & EXIT SIGNS ARE TO BE CONNECTED TO THE UNSWITCHED PORTION OF THE CIRCUIT.
4. REFER TO THE ARCHITECTURAL REFLECTED CEILING PLAN & BUILDING SECTIONS FOR THE EXACT LOCATION & MOUNTIING HEIGHT OF ALL FIXTURES.
5. FIELD VERIFY EXACT LOCATION OF ALL FIXTURES W/ OWNER & CONTRACTORS PRIOR TO INSTALLATION.
6. ALL EXTERIOR LIGHTS SHALL BE CONTROLLED VIA PHOTOCELL OR TIMECLOCK.

Designed By:
Moffett Construction
1535 American Way
Cedar Hill, TX 76001

PROJECT:
3020 BROADWAY ST
SAN ANTONIO, TX 78209

ISSUE:
4-26-19

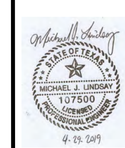

ELECTRICAL SPECS & DETAILS

E3

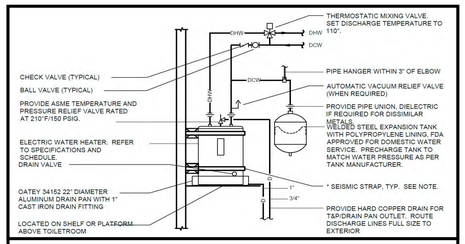

WATER HEATER DETAIL

N.T.S.

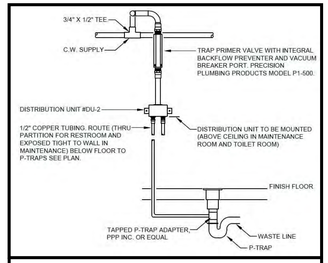

TRAP PRIMER DETAIL

N.T.S.

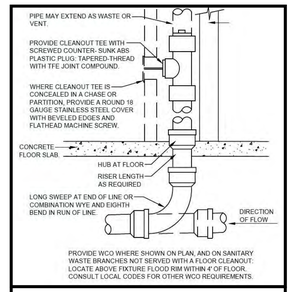

WALL CLEANOUT DETAIL

N.T.S.

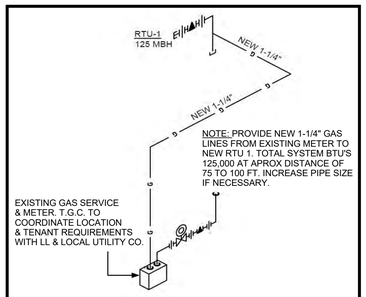

GAS RISER DIAGRAM

N.T.S.

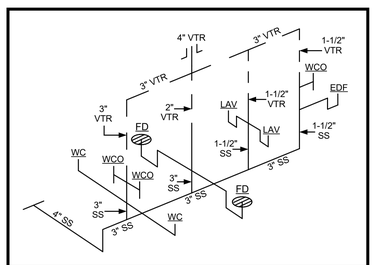

WASTE & VENT DIAGRAM

N.T.S.

GENERAL NOTES

1. ALL WORK SHALL BE IN ACCORDANCE W/ LATEST EDITIONS OF ALL APPLICABLE STATE, NATIONAL CODES & ALL LOCAL ORDINANCES & AMENDMENTS.
2. ALL WORK SHALL BE PERFORMED IN ACCORDANCE W/ LAND LORD REQUIREMENTS.
3. CONTRACTOR SHALL PROVIDE ALL MATERIALS FOR A COMPLETE OPERATIONAL SYSTEM, INCLUDING TO COORDINATE WITH OTHER TRADES AND STRUCTURAL MEMBERS.
4. CONTACT ENGINEER / DESIGNER IF ANY MODIFICATIONS ARE NECESSARY.
5. PROVIDE ACCESS TO ALL VALVES LOCATED ABOVE CEILING AND WITHIN WALLS.

ELECTRIC WATER HEATER SCHEDULE

MARK	MANUF/ MODEL#	STOR. CAP.	ELECTRIC	TEMP	NOTES
WH	RHEEM XE10P06PU20U0	10 GAL	2000W / 120 V 16.67 AMPS	150 / 90	ALL

NOTES:

1. PROVIDE ALL REQUIRED ACCESSORIES, CONTROLS & INSTALLATION KIT.
2. INSTALL ACCORDING TO MANUFACTURER RECOMMENDATIONS.

PLUMBING FIXTURE CONNECTION SCHEDULE

MARK	DESCRIPTION	TRAP SIZE	WASTE	VENT	COLD WATER	HOT WATER	REMARKS
FD	3" FLOOR DRAIN	3"	3"	2"	—	—	WITH TRAP PRIMER
EDF	DRINKING FOUNTAIN	1-1/2"	1-1/2"	1-1/2"	1/2"	1/2"	WALL MOUNT
LAV	LAVATORY	1-1/2"	1-1/2"	1-1/2"	1/2"	1/2"	WALL MOUNT
WC	WATER CLOSET TANK TYPE	INTEGRAL	3"	3"	3/4"	—	(HDCP)

PLUMBING FIXTURE SCHEDULE

MARK	MFR/MODEL	DESCRIPTION
FD	ZURN ZN-415-2"	CAST IRON FLOOR DRAIN W/ FLANGE, INTEGRAL REVERSING CLAMPING COLLAR, NICKEL BRONZE, TYPE "B" STRAINER BOTTOM OUTLET. PROVIDE "SIOUX CHIEF" PERFECT PRIME T.P.
EDF	ELKAY BI-LEVEL EZSTL8LC	ELKAY VERSATILE COOLER / WALL MOUNT / BI-LEVEL ADA / NON FILTERED / 8 GPH OF 50 DEG DRINKING WATER / LIGHT GRAY GRANITE DRINKING FOUNTAIN / 115V/60HZ / 5 AMPS / 370 W / 36 3/4" X 19" X 25 5/16" / 72 LBS / 80 DEG INLET & 90 DEG AMBIENT (NOTE: MAY USE SIMILAR MODEL. NOTIFY GC IF CHANGES ARE TO BE MADE)
LAV	AMERICAN STANDARD LUCERNE 0355.012	WALL MOUNT LAVATORY, 20-1/2" X 18-1/4" D-SHAPE BOWL, 4" CENTER FAUCET W/ 3 FAUCET HOLES, WHITE. SELF DRAINING DECK W/ BACK & SIDE SPLASH SHIELDS. ADA COMPLIANT, LAV CONCEALED ARM CARRIER "ZURN" Z-1231. FAUCET: "AMER STAND" 7385.003 CHROME PLATED BRASS, 5" SPOUT, DECK MOUNTED, 4" CENTERSET, LEVER & KNOB HANDLE, METAL DRAIN LESS POP-UP TYPE FITTING W/ PLATED FLANGE & STOPPER. ADA COMPLIANT.
WC	AMERICAN STANDARD CADET 3 2383.012	TANK TYPE, VITREOUS CHINA, LOW CONSUMPTION (1.6 GPF) FLOOR MOUNTED, ELONGATED BOWL, WHITE, RIM HEIGHT 15" AFF. CHROME TRIP LEVER. SEAT: "AMER STAND" 5901.100 OPEN FRONT TOILET SEAT LESS COVER, ELONGATED HEAVE DUTY BOWL, STAINLESS STEEL CHECK HINGES.

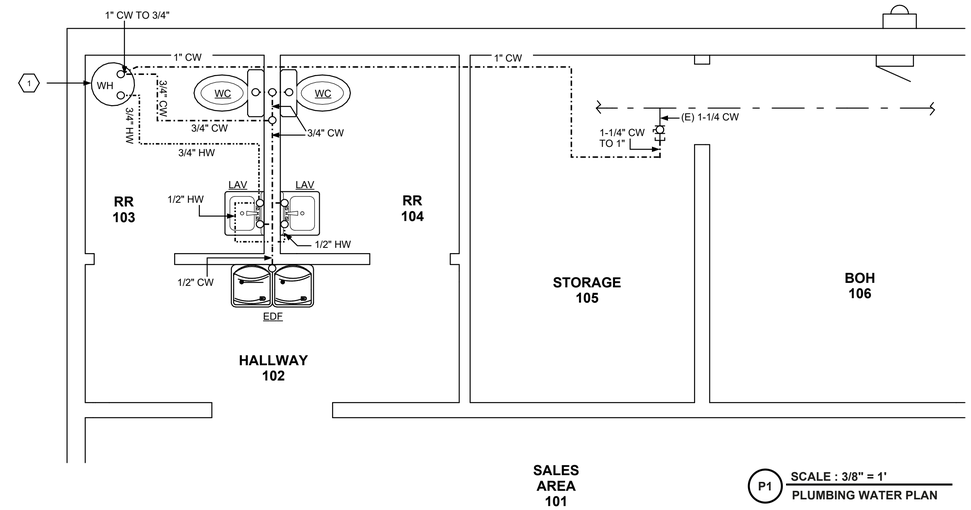

P1 SCALE : 3/8" = 1'
PLUMBING WATER PLAN

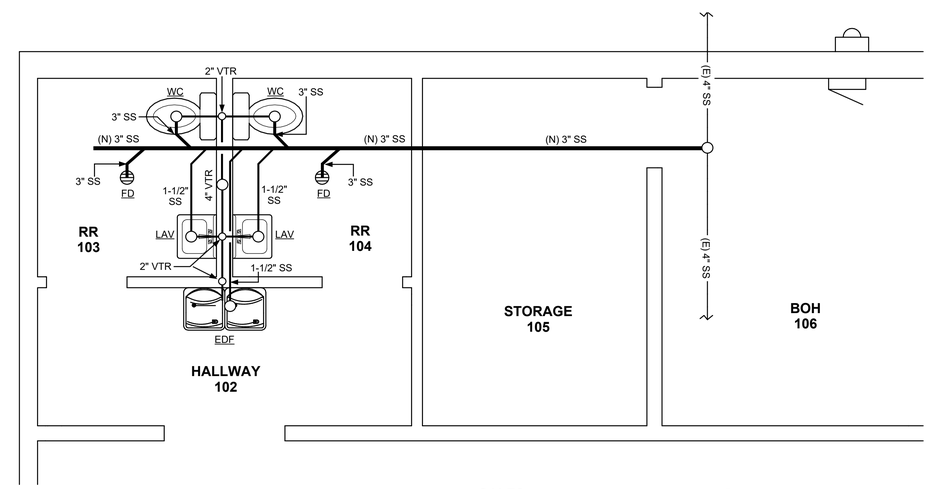

P1 SCALE : 3/8" = 1'
PLUMBING WASTE PLAN

PLUMBING PLAN KEY NOTES

1. WATER HEATER TO BE MOUNTED ABOVE CEILING ON WALL OR PLATFORM.
2. ALL LAV, WC, EDF, OR RESTROOM FIXTURES MAY HAVE PEX WATER LINES. WHATER SHUT-OFF VALVES AND WATER LINES MUST BE FLUSH MOUNTED ON WALL SECURED.
3. GAS METER IS EXISTING. NEW GAS LINES TO RTU 1 TO BE INSTALLED AND TESTED REQUIRED BY LOCAL GAS COMPANY.
4. PLUMBING CONTRACTOR TO VERIFY LOCATIONS OF EXISTING WATER MAIN & SEWER LINES BEFORE WORK TO BEGIN.

PLUMBING PLAN KEY LEGEND

— SS —	SANITARY SEWER	TCS	THREE COMPARTMENT SINK
— G —	NATURAL GAS	HS	HAND SINK
— CD —	CONDENSATE DRAIN	EDF	DRINKING FOUNTAIN
	DOMESTIC COLD WATER	LAV	LAVITORY SINK
	DOMESTIC HOT WATER	WC	WATER CLOSET
	VENT PIPING	WH	WATER HEATER
	FLOOR DRAIN	FS	FLOOR SINK
	BALL VALVE W/ PIPE CAP	FD	FLOOR DRAIN
		WCO	WALL CLEAN OUT
		VTR	VENT TO ROOF

MOFFETT CONSTRUCTION

Designed By:
Moffett Construction
1535 American Way
Cedar Hill, TX 76001

PROJECT:
3020 BROADWAY ST
SAN ANTONIO, TX 78209

ISSUE:
4-26-19

PLUMBING PLAN

P1

VENTILATION REQUIREMENT CALCULATION

PER IMC TABLE 403.3

ROOM NAME	UNIT SERVICING	PEOPLE	CFM PERSON	CFM/SF	AREA (SF)	PEOPLE X CFM/PERSON	SF X CFM/SF	REQUIRED O.A. CFM	PROVIDED O.A. CFM
SALES 101	RTU 1	19	7.5	0.12	1223	142.5	146.76	289.26	360
BOH /STORAGE 105 & 106	RTU 1	0	10	0.12	432	0	51.84	51.84	60
MIN FRESH AIR CFM REQUIRED PER CODE									341.1
TOTAL O.A.									420
ZONE AIR DISTRIBUTION EFFECTIVENESS (TBL 403.3.1.2)=0.8									525
TOTAL O.A. PROVIDED									530
RESTROOMS	70 CFM / FIXTURE				# FIXTURE (2)	140 CFM EXHST REQ		140 CFM EXHST PROV	

NOTES: REPRESENTS CONDITIONS DURING NORMAL OPERATIONS AND NOT CONSIDERING ECONOMIZER OPERATION.

EXHAUST FAN SCHEDULE

MARK	MANUF/ MODEL#	TYPE	CFM	E.S.P.	HP	B.D.D	DRIVE	WEIGHT	REMARKS
EXH FAN	GREENHECK SP-B110	CLG.	100	0.25	80W	YES	DIRECT	10 LBS	SWITCH WITH LIGHT

GRILLE, REGISTER & DIFFUSER SCHEDULE

PLAN SYMBOL	MFGR MODEL	DESC.	FRAME	STYLE	FINISH	MATERIAL	DAMPER	MAX NC	REMARKS
☒	GRAINGER	SUPPLY	SURFACE	LOUV	WHITE	STEEL	OBD	30	24" X 24" FRAME
⧄	GRAINGER	RETURN	SURFACE	PERF	WHITE	STEEL	—	30	24" X 24" FRAME

EXISTING RTU PACKAGE GAS/ ELECTRIC COOLING SCHEDULE

MARK	MANUF/ MODEL#	HEATING CAPACITY (MBH)			COOLING CAPACITIES (MBH)			CFM	OA CFM	ELECTRICAL DATA	EER IEER	HP	MCA	MOCP	O.P. WEIGHT
		INPUT	OUTPUT	STAGES	TOTAL CAPACITY	SENSIBLE CAPACITY	STAGES								
RTU 1	CARRIER 48TCDD08 7.5 TONS	125,000	103,000	1	90,100	68,900	2	3000	530	208-230 3PH/60HZ	11 11.7	1.7	38.8	50	1053 LBS

1. SINGLE ENTHALPY ECONOMIZER - FACTORY INSTALLED
2. BAROMETRIC RELIEF - FACTORY INSTALLED
3. DISCONNECT - FACTORY PROVIDED, FIELD INSTALLED
4. GFCI CONV OUTLET - FACTORY PROVIDED, FIELD INSTALLED
5. R.A. SMOKE DETECTOR - FACTORY PROVIDED, FIELD INSTALLED
6. 14" ROOF CURB - FACTORY PROVIDED, FIELD INSTALLED
7. FACTORY EQUIPMENT OPERATIONS CHECK (EOC)
8. WARRANTY - 10 YEAR HEAT EXCHANGER / 5 YEAR COMPRESSOR / 3 YEAR CONTROLLER
9. LOW LEAKAGE (1%) DAMPERS
10. 2" THROW-AWAY FILTERS / REGIONAL OPTIONS: HAIL GUARDS, FACTORY SUPPLIED, FIELD INSTALLED.

NOTE: T-STAT SHALL BE HONEYWELL VISION PRO TH8000 SERIES

NOTE: OPTIONAL MANUFACTURERS- TRANE, GOODMAN, ECT.. / NOTIFY ENGINEER / OWNER GC FOR APPROVAL.

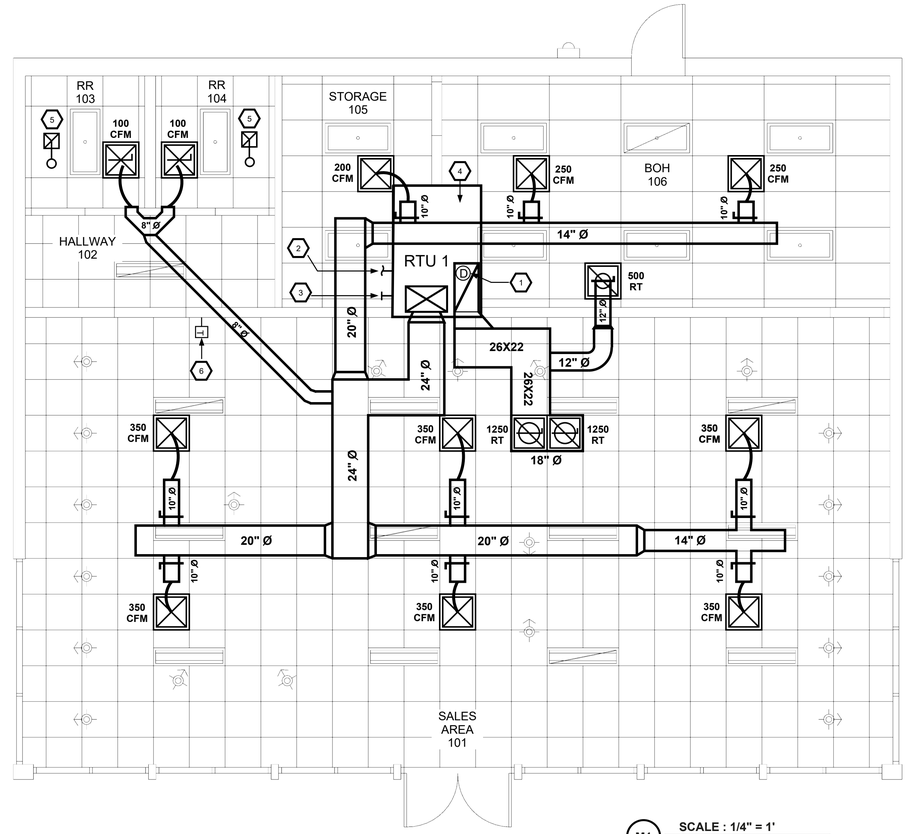

M1 SCALE : 1/4" = 1'
MECHANICAL PLAN

MECHANICAL PLAN KEY NOTES

1. PROVIDE DUCT MOUNTED SMOKE DETECTOR IN RA TO PROVIDE FAN SHUTDOWN UPON DETECTION OF SMOKE.
2. PROVIDE NEW CONDENSATE DRAIN. TERMINATE TO APPROVED LOCATION.
3. PROVIDE NEW GAS LINES PER CODE. CONNECT TO LL EXISTING GAS METER.
4. RTU TO BE INSTALLED AT THIS LOCATION FOR RTU ROOF SUPPORT.
5. PROVIDE NEW RESTROOM EXHAUST FAN. TERMINATE AT ROOF.
6. PROVIDE NEW 7-DAY PROGRAMABLE THERMOSTAT.

MECHANICAL PLAN KEY LEGEND

- NEW SUPPLY GRILLS
- NEW RETURN GRILLS
- VOLUME DAMPER
- T-STAT
- FLEX DUCT CONNECTED TO SUPPLY / RETURN PLENUM
- EXHAUST FAN / VENT UP TO ROOF
- SMOKE DETECTOR
- LOCATION OF DUCT SIZE CHANGE

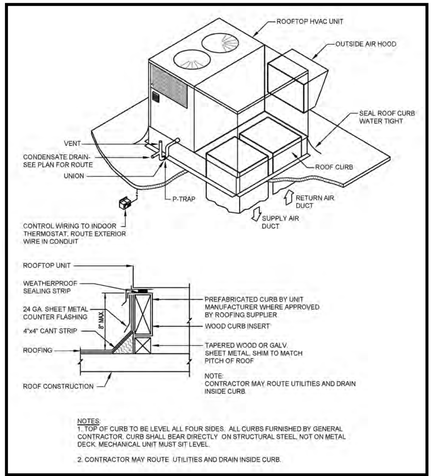

ROOFTOP INSTALLATION DETAIL N.T.S.

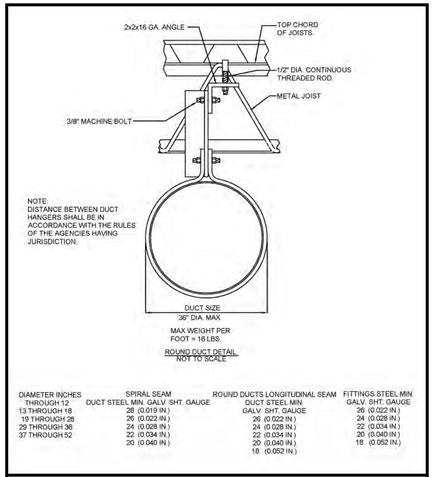

DUCTWORK SUPPORT DETAIL N.T.S.

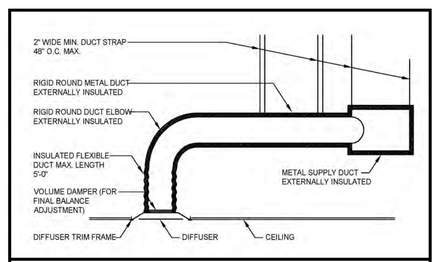

DIFFUSER CONNECTION DETAIL N.T.S.

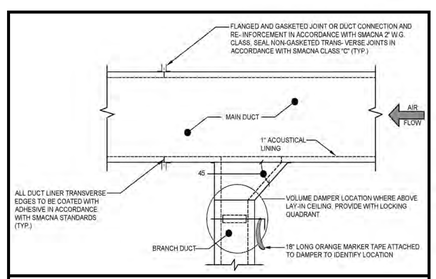

TYP. RECTANGULAR TAKE-OFF DETAIL N.T.S.

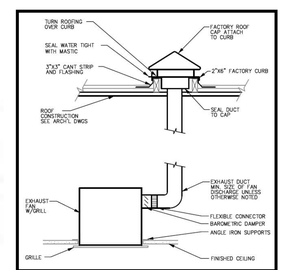

EXHAUST VENT DETAIL N.T.S.

DIFFUSER SIZING SCHEDULE

NECK SIZE	AIR FLOW SUPPLY	AIR FLOW RETURN
8"ø	1 - 200	1 - 600
10"ø	201 - 375	161 - 290
12"ø	376 - 600	291 - 485
14"ø	601 - 900	496 - 700
16"ø	901 - 1300	701 - 1050

MOFFETT CONSTRUCTION

Designed By:
Moffett Construction
1535 American Way
Cedar Hill, TX 76001

PROJECT:
3020 BROADWAY ST
SAN ANTONIO, TX 78209

ISSUE:
4-26-19

MECHANICAL PLAN

M1

STRUCTURAL ENGINEERING

FOR

AT&T COMMERCIAL BUILDING REMODEL

3020 BROADWAY STREET
SAN ANTONIO, TEXAS 78215

LIST OF DRAWINGS

Site Location

ENGINEER:

DGA
Consulting Engineers
Post Office Box 852697
Mesquite, Texas 75185
Phone: (214) 356-0797
www.dgaengineers.com
Texas Registered Engineering Firm F-12706

CONSULTANT:

OWNER'S REPRESENTATIVE:
MOFFETT CONSTRUCTION
c/o BRANDON MOFFETT
1535 AMERICAN WAY
CEDAR HILL, TEXAS 76001
(682) 323-7700

AT&T BUILDING REMODEL
STRUCTURAL RENOVATION
3020 BROADWAY STREET
SAN ANTONIO, TEXAS 78215

REVISIONS:

NO.	DATE	ISSUE:

STATE OF TEXAS
DONAL R GREEN
77140
LICENSED PROFESSIONAL ENGINEER
4/25/19

DGA Project Number: DGA-S-1925
Date: APRIL 25, 2019
Sheet Title
COVER
Sheet Number
CO of 22

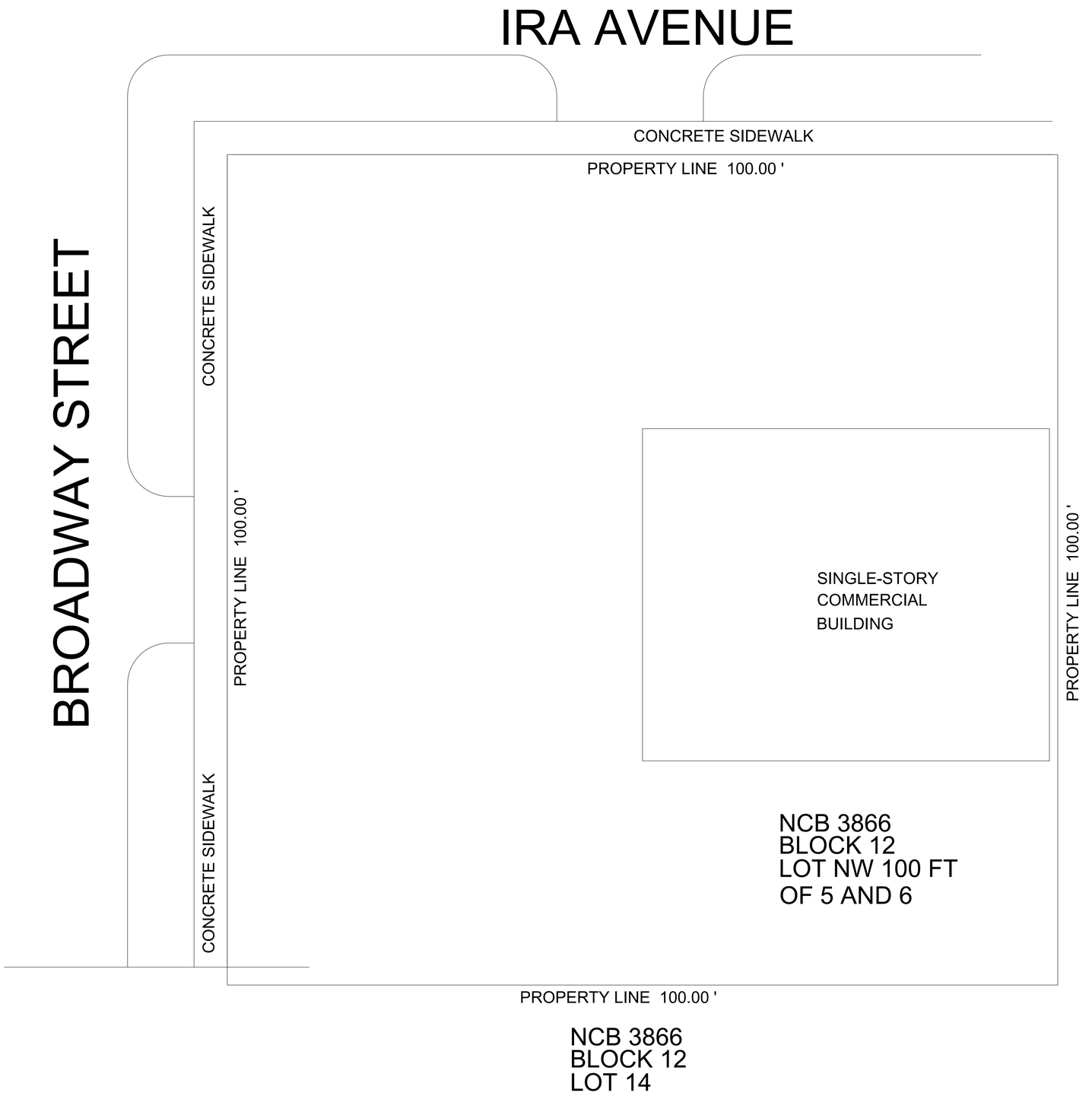

SITE PLAN

SCALE: 1/8" = 1' - 0"

STATE OF TEXAS
DONAL R GREEN
77140
LICENSED
PROFESSIONAL ENGINEER
4/25/19

ENGINEER:

DGA
Consulting Engineers
Post Office Box 852697
Mesquite, Texas 75185
Phone: (214) 356-0797
www.dgaengineers.com
Texas Registered
Engineering Firm
F-12706

CONSULTANT:

OWNER'S REPRESENTATIVE:
MOFFETT CONSTRUCTION
c/o BRANDON MOFFETT
1535 AMERICAN WAY
CEDAR HILL, TEXAS 76001
(682) 323-7700

AT&T BUILDING REMODEL

STRUCTURAL RENOVATION
3020 BROADWAY STREET
SAN ANTONIO, TEXAS 78215

REVISIONS:

NO.	DATE	ISSUE:

DGA Project Number: DGA-S-1925
Date: APRIL 25, 2019
Sheet Title
SITE PLAN
Sheet Number
S1 of 22

GENERAL NOTES

1. THE STRUCTURE IS DESIGNED IN ACCORDANCE WITH THE REQUIREMENTS OF THE INTERNATIONAL BUILDING CODE 2018 (IBC 2018).

2. THE DESIGN LIVE LOADS FOR THE STRUCTURE ARE AS FOLLOWS:
   ROOFS.....12 PSF
   FLOOR.....40 PSF
   STAIRS.....100 PSF

3. LIVE LOAD REDUCTIONS ARE IN STRICT ACCORDANCE WITH THE AFOREMENTIONED CODES.

4. METHODS, PROCEDURES AND SEQUENCES OF CONSTRUCTION ARE THE RESPONSIBILITY OF THE CONTRACTOR. THE CONTRACTOR SHALL TAKE ALL MEASURES NECESSARY TO MAINTAIN AND INSURE THE INTEGRITY OF THE STRUCTURE AT ALL STAGES OF CONSTRUCTION.

5. REFER TO THE ARCHITECTURAL, MECHANICAL, ELECTRICAL AND PLUMBING DRAWINGS FOR SLEEVES, CURBS, INSERTS, ETC. NOT SHOWN ON THE STRUCTURAL DRAWINGS.

6. THE USE OF REPRODUCTIONS OF THESE CONTRACT DRAWINGS BY ANY CONTRACTOR, ERECTOR, FABRICATOR, OR MATERIAL SUPPLIER IN LIEU OF PREPARATION OF SHOP DRAWINGS SIGNIFIES HIS ACCEPTANCE OF ALL INFORMATION SOWN HEREON AS CORRECT AND DELEGATES HIMSELF TO ANY JOB EXPENSE, REAL OR IMPLIED, DUE TO ERRORS THAT MAY OCCUR HEREIN.

7. CONTRACTOR OR BUILDER IS RESPONSIBLE FOR INSURING THAT THESE DRAWINGS ARE CORRECT BEFORE STARTING CONSTRUCTION. DGA, IINC. SHALL NOT BE LIABLE FOR THE INCORRECT FORMS OR FOR DIMENSIONAL DISCREPANCIES BETWEEN THIS PLAN AND THE ARCHITECTURAL DRAWINGS.

8. ALL MATERIAL AND WORKMANSHIP SHALL CONFORM TO DRAWINGS AND SPECIFICATIONS AND THE LATEST EDITION OF THE BUILDING CODE.

9. ALL ERECTION PROCEDURES SHALL CONFORM TO OSHA STANDARDS. ANY DEVIATIONS MUST BE APPROVED BY OSHA PRIOR TO ERECTION.

10. THE CONTRACTOR SHALL BE RESPONSIBLE FOR COORDINATING THE WORK OF TRADES AND SHALL CHECK ALL DIMENSIONS. ANY DISCREPANCIES SHALL BE CALLED TO THE ATTENTION OF THE ARCHITECT AND BE RESOLVED BEFORE PROCEEDING WITH ANY WORK.

11. ANY REFERENCE TO CODES OR SPECIFICATIONS SHALL BE WITH RESPECT TO THE CURRENT EDITIONS OF THE SAME.

12. CONTRACTOR SHALL BE RESPONSIBLE FOR RIGID BRACING OF ALL WALLS, FORMWORK, SHORING, AND FALSE WORK DURING CONSTRUCTION.

13. FRAMING LAYOUTS ARE PROVIDED TO REPRESENT DESIGN CONCEPTS AND SYSTEMS CONSTRUCTION. CONTRACTOR AND HIS SUBCONTRACTORS ARE RESPONSIBLE FOR MATERIAL QUALITIES AND ANY AND ALL UNSPECIFIED COMPONENTS REQUIRED FOR CONSTRUCTION.

WIRE NAILING, FASTENERS, & HARDWARE

1. NAILING INSTALLATION AND MATERIAL ARE TO BE IN COMPLIANCE WITH A.I.T.C., NDS, AND APPLICABLE BUILDING CODE REQUIREMENTS.

2. GUN NAILS MAY BE USED IN LIEU OF HAND NAILING. GUN NAIL SIZES SHALL BE AS FOLLOWS:

PENNYWEIGHT	GUN NAIL DIAMETER
8d	0.113"
10d	0.123"
12d	0.123"
16d	0.133"

3. NAILS SHALL HAVE A MINIMUM PENETRATION OF 6 TIMES THE WIRE DIAMETER UNLESS OTHERWISE NOTED ON PLANS.

4. EDGE DISTANCE OF ALL NAILS SHALL BE A MINIMUM OF 2 TIMES THE WIRE DIAMETER UNLESS OTHERWISE NOTED ON PLANS.

5. ALL HANGERS SHALL BE MANUFACTURED BY SIMPSON STRONG TIE. ALTERNATIVES SHALL BE SUBMITTED TO ENGINEER FOR REVIEW.

6. ALL HANGERS SHALL BE INSTALLED ACCORDING TO MANUFACTURER'S RECOMMENDATION.

CONVENTIONAL 2X FRAMING

1. LUMBER AND ITS FASTENING SHALL CONFORM TO THE "NATIONAL DESIGN SPECIFICATION OF STRESS - GRADE LUMBER AND ITS FASTENING" (LATEST EDITION) AS RECOMMENDED BY THE NATIONAL FOREST PRODUCTS ASSOCIATION.

2. LUMBER FOR HEADERS, BEAMS, AND OTHER FRAMING MEMBERS SHALL BE NO. 2 SOUTHERN YELLOW PINE (MC19) OR #2 DOUGLAS FIR (MC19).

3. LUMBER OF THE TOP AND BOTTOM PLATES SHALLL BE SOUTHERN YELLOW PINE CONSTRUCTION GRADE OR #3 (MC19).

4. ALL OTHER WALL CONSTRUCTION SHALL BE EITHER CONSTRUCTION GRADE OR UTILITY HEADER AND OTHER MISCELLANEOUS FLEXURAL MEMBERS SHALL BE NO. 2 SOUTHERN YELLOW PINE (MC19 OR BETTER U.N.O.).

5. MATERIAL MUST BE GRADE MARKED.

6. SOLE PLATES AT FIRST FLOOR SHALL BE PRESSURE TREATED LUMBER, 0.25CCA MINIMUM.

7. ENGINEERED WOOD PRODUCTS SHALL BE AS MANUFACTURED BY WEYERHAEUSER. ALTERNATIVES SHALL BE SUBMITTED TO ENGINEER FOR REVIEW

STATE OF TEXAS
DONAL R GREEN
77140
LICENSED PROFESSIONAL ENGINEER
4/25/19

ENGINEER:

DGA
Consulting Engineers
Post Office Box 852697
Mesquite, Texas 75185
Phone: (214) 356-0797
www.dgaengineers.com
Texas Registered Engineering Firm F-12706

CONSULTANT:

OWNER'S REPRESENTATIVE:
MOFFETT CONSTRUCTION
c/o BRANDON MOFFETT
1535 AMERICAN WAY
CEDAR HILL, TEXAS 76001
(682) 323-7700

AT&T BUILDING REMODEL
STRUCTURAL RENOVATION
3020 BROADWAY STREET
SAN ANTONIO, TEXAS 78215

REVISIONS:

NO.	DATE	ISSUE:

DGA Project Number: DGA-S-1925
Date: APRIL 25, 2019
Sheet Title
GENERAL NOTES
Sheet Number
S2 of 22

REINFORCED CONCRETE NOTES

1. CONCRETE FOR POOL, GRADE BEAMS, AND DRILLED SHAFTS SHALL HAVE NATURAL SAND FIND AGGREGATE AND NORMAL WEIGHT COARSE AGGREGATES CONFORMING TO ASTM C33, TYPE 1 PORTLAND CEMENT CONFORMING TO ASTM C150, AND SHALL HAVE A COMPRESSIVE STRENGTH (F'c) OF 3500 psi AT 28 DAYS.

2. DETAILING OF CONCRETE REINFORCEMENT BARS AND ACCESSORIES SHALL CONFORM TO THE RECOMMENDATIONS OF THE ACI DETAILING MANUAL ACI 315.

3. GUNNITE IS THE PREFERRED TYPE OF CONCRETE USED. MIXING, HANDLING, AND PLACING OF CONCRETE SHALL CONFORM TO ACI 301.

4. CONCRETE COVER PROTECTION FOR REINFORCING SHALL CONFORM TO ACI 318.

5. CONCRETE REINFORCEMENT BARS SHALL CONFORM TO ASTM A615, GRADE 60, WITH SUPPLEMENTARY REQUIREMENTS. NO. 3 BARS MAY CONFORM TO ASTM A615 GRADE 40, WITH SUPPLEMENTARY REQUIREMENTS UNLESS NOTED OTHERWISE. THE "N" DESIGNATION SHALL BE ACCEPTED IN LIEU OF THE "S" DESIGNATION REQUIREMENT; HOWEVER, OTHER REQUIREMENTS OF SUPPLEMENT SHALL BE MET. REINFORCEMENT BARS SHALL NOT BE TACK WELDED, WELDED, HEATED, OR CUT UNLESS INDICATED ON THE CONTRACT DOCUMENTS OR APPROVED BY THE STRUCTURAL ENGINEER.

6. WELDING OF REINFORCEMENT BARS, WHEN APPROVED BY THE STRUCTURAL ENGINEER, SHALL CONFORM TO THE AMERICAN WELDING SOCIETY STANDARD D1.479. ELECTRODES FOR SHOP FIELD WELDING OF REINFORCEMENT BARS SHALL CONFORM TO ASTM A233, CLASS E90XX.

7. COMPLETE REINFORCING PLACEMENT DRAWINGS PREPARED IN ACCORDANCE WITH ACI 315 SHALL BE REVIEWED BY THE ENGINEER AND AVAILABLE ON THE JOB SITE PRIOR TO PLACING OF CONCRETE.

8. MAXIMUM SLUMP IN CONCRETE SHALL NOT EXCEED 5" IN FLATWORK.

9. ALL CONCRETE MIX SHALL BE DESIGNED BY A QUALIFIED REGISTERED ENGINEER AND LAB CONCRETE MIX DESIGN RESULTS SHALL BE SUBMITTED TO STRUCTURAL ENGINEER FOR REVIEW.

10. WATER FOR CONCRETE SHALL BE CLEAN, FRESH, AND DRINKABLE.

11. CONCRETE MIX DESIGNS MUST BE SUBMITTED A MINIMUM OF 15 DAYS PRIOR TO THE START OF WORK FOR DGA AND OWNER'S TESTING LAB APPROVAL PRIOR TO PLACEMENT OF CONCRETE IN THE PLANT OR FIELD. ANY ADJUSTMENTS IN APPROVED MIX DESIGNS INCLUDING CHANGES IN ADMIXTURES MUST BE SUBMITTED IN WRITING TO THE DGA AND OWNER'S TESTING LAB FOR APPROVAL PRIOR TO USE IN THE FIELD.

12. WELDED WIRE FABRIC (WWF) SHALL BE IN ACCORDANCE WITH ASTM A185. PROVIDE FABRIC IN FLAT SHEETS (ROLLED SHEETS ARE NOT ACCEPTABLE). LAB FABRIC TWO MESHES AT SPLICE LOCATIONS.

13. ALL REINFORCING STEEL SHALL BE SUPPORTED TO MID - DEPTH USING PLASTIC CHAIRS SPACED AT 48" ON CENTER EACH WAY.

14. AFTER COMPLETING THE SURFACE FINISH ON A CONCRETE POUR, THE POUR SHALL BE COVERED WITH PLASTIC AND KEPT DAMP FOR THE NEXT 72 HOURS.

15. CURING COMPOUND MAY BE USED IN LIEU OF WET CURING, SUBMIT CURING COMPOUND TO ARCHITECT AND ENGINEER FOR REVIEW. CURING COMPOUNDS THAT MAY HAVE CONFLICT WITH THE FINISH SHALL NOT BE USED.

TESTING AND INSPECTION

1. AT THE CONTRACTOR'S REQUEST AND EXPENSE, DGA WILL PERFORM A "PREPOUR INSPECTION" TO VERIFY THE PROPER IMPLEMENTATION OF THIS FOUNDATION DESIGN. THE CONTRACTOR MUST NOTIFY DGA, INC. AT LEAST 48 HOURS PRIOR TO CONCRETE PLACEMENT TO SCHEDULE A PREPOUR INSPECTION.

2. THE STRUCTURAL ENGINEER SHOULD EXAMINE EACH FOOTING EXCAVATION AND FILL TO DETERMINE THAT THE PROPER DESIGN REQUIREMENTS HAVE BEEN REACHED. THIS INSPECTION SHOULD BE PERFOMED PRIOR TO THE PLACEMENT OF THE SLAB REINFORCEMENT IN TH EXCAVATION. INSPECTION OF THE FOUNDATION REINFORCEMENT FOR THE SLAB POUR SHALL BE PERFORMED BY THE STRUCTURAL ENGINEERPRIOR TO PLACING OF CONCRETE IN EACH POUR.

3. THE STRUCTURAL ENGINEER SHOULD MONITOR THE DEGREE OF COMPACTION OF THE FILL FOR THIS SUBGRADE BENEATH THE SLAB - ON - GRADE. ANY AREAS OF WEAKNESS SHOULD BE REWORKED ACCORDING TO THE ENGINEER'S RECOMMENDATION.

4. ATTERBERG LIMITS TESTS OF ALL MATERIAL TO BE USED AS COMPACTED FILL UNDER THE SLABS - ON - GRADESHALL BE PERFORMED.

5. COMPACTION TESTS OF EACH LIFT OF COMPACTED SOILS SUPPORTING ALL SLABS-ON-GRADE SHALL BE PERFORMED.

6. CONCRETE CYLINDER TESTS AND SLUMP TESTS FOR FOOTINGS, PIERS, GRADE BEAMS AND SLABS - ON - GRADE, SHALL BE 2 CYLINDERS PER 50 CUBIC YARDS.

STATE OF TEXAS
DONAL R GREEN
77140
LICENSED PROFESSIONAL ENGINEER
4/25/19

ENGINEER:

DGA
Consulting Engineers
Post Office Box 852697
Mesquite, Texas 75185
Phone: (214) 356-0797
www.dgaengineers.com
Texas Registered Engineering Firm F-12706

CONSULTANT:

OWNER'S REPRESENTATIVE:
MOFFETT CONSTRUCTION
c/o BRANDON MOFFETT
1535 AMERICAN WAY
CEDAR HILL, TEXAS 76001
(682) 323-7700

AT&T BUILDING REMODEL
STRUCTURAL RENOVATION
3020 BROADWAY STREET
SAN ANTONIO, TEXAS 78215

REVISIONS:

NO.	DATE	ISSUE:

DGA Project Number: DGA-S-1925
Date: APRIL 25, 2019
Sheet Title
CONCRETE NOTES
Sheet Number
S3 of 22

CONCRETE MASONRY NOTES

1. ALL CONCRETE MASONRY UNITS (CMU) SHALL BE MINIMUM ASTM C90- GRADE N, TYPE 1 LIGHTWEIGHT UNITS.

2. ALL CMUs SHALL BE PLACED IN STRICT ACCORDANCE WITH LATEST ACI SPECIFICATIONS FOR CONCRETE MASONRY STRUCTURES.

3. ALL MORTAR SHALL BE ASTM C270, TYPE S MORTAR CONSISTING OF PORTLAND CEMENT LIME AND AGGREGATE.

4. PORTLAND CEMENT SHALL CONFORM TO ASTM C-150. AGGREGATE SHALL CONFORM TO ASTM C-144. HYDRATED LIME SHALL CONFORM TO ASTM C-207.

5. NO CALCIUM CHLORIDE OR FLY ASH SHALL BE PERMITTED IN THE MORTAR MIX.

6. VERTICAL CELLS SHOWN ON PLANS OR IN SECTION AS GROUTED SOLID SHALL HAVE VERTICAL ALIGNMENT SUFFICIENT TO MAINTAIN A CLEAR, UNOBSTRUCTED, CONTINUOUS VERTICAL CELL MEASURING NOT LESS THAN 2 INCHES BY 3 INCHES.

7. ALL CELLS CONTAINING REINFORCEMENT SHALL BE FILLED SOLIDLY WITH 3000 PSI CONCRETE. CONCRETE SHALL BE AS SPECIFIED IN STRUCTURAL CONCRETE SECTION OF GENERAL NOTES. THE MAXIMUM AGGREGATE SIZE FOR GROUTING CMUs SHALL BE $\frac{3}{8}$ INCH.

8. ALL REINFORCING STEEL BARS SHALL CONFORM TO ASTM A-496 FOR DEFORMED STEEL WIRE.

9. ALL REINFORCING SHALL BE IN PLACE PRIOR TO GROUTING .

10. ALL SPLICES IN REINFORCING BARS SHALL LAP A MINIMUM OF 30 BAR DIAMETERS.

PLUMBING NOTES

1. NO PLUMBING PIPES SHALL RUN IN THE BEAMS AT ANY LOCATION. WHERE PLUMBING LINES MUST CROSS THE BEAMS, THEY SHOULD DO SO AT RIGHT ANGLES. AT PERIMETER BEAMS OR OTHER LOCATIONS WHERE IT IS UNAVOIDABLE TO KEEP PLUMBING PIPES OUT OF A BEAM, THE BEAM SHALL BE WIDENED THE WIDTH OF THE PIPE FOR A DISTANCE 2'-0" LONGER THAN THE DISTANCE THE PIPE IS IN THE BEAM. (3) #4 BARS SHALL BE ADDED TO THE TOP AND BOTTOM OF THE BEAM FOR THE DISTANCE THE BEAM IS WIDENED.

2. ALL ELECTRICAL CONDUIT OR VENT PIPES SHALL BE LOCATED BELOW THE SLAB.

LIMITATIONS

1. IF A PREPOUR INSPECTION OF THIS FOUNDATION IS NOT PERFORMED BY AN AUTHORIZED REPRESENTATIVE OF DGA, INC. PRIOR TO CONCRETE PLACEMENT, DGA WILL NOT BE HELD RESPONSIBLE FOR THE PROPER IMPLEMENTATION OF THIS FOUNDATION DESIGN. CONTACT DGA FOR INSPECTION FEES.

2. LIKE ALL SOIL-SUPPORTED FOUNDATION SYSTEMS, THIS FOUNDATION WILL EXHIBIT VERTICAL MOVEMENT WHEN THE EXPANSIVE SOILS EXPERIENCE A CHANGE IN MOISTURE CONTENT.

3. FOR THE FOUNDATION TO PERFORM AS DESIGNED, THE OWNER MUST MAINTAIN A CONSISTENT LEVEL OF SOIL MOISTURE AROUND THE PERIMETER OF THE FOUNDATION. DO NOT ALLOW WATER TO STAND NEXT TO THE FOUNDATION. DO NOT ALLOW THE SOIL TO DRY OUT TO THE POINT WHERE IT CRACKS OR PULLS AWAY FROM THE FOUNDATION.

4. THE OWNER SHOULD NOT PLANT TREES OR SHRUBS OVER SIX FEET HIGH WITHIN 15 FEET OF THE BUILDING PERIMETER.

5. THE CONTRACTOR AND/OR OWNER SHALL ALLOW FOR VERTICAL MOVEMENT OF THE SLAB. BRICK VENEER, STUCCO, TILE, AND SIMILAR BRITTLE FINISHES SHOULD BE INSTALLED TO ACCOMODATE UP TO 1/4" DIFFERENTIAL VERTICAL FOUNDATION MOVEMENT OVER 10 FEET.

STATE OF TEXAS
DONAL R GREEN
77140
LICENSED PROFESSIONAL ENGINEER
4/25/19

ENGINEER:

DGA
Consulting Engineers
Post Office Box 852697
Mesquite, Texas 75185

Phone: (214) 356-0797

www.dgaengineers.com

Texas Registered
Engineering Firm
F-12706

CONSULTANT:

OWNER'S REPRESENTATIVE:
MOFFETT CONSTRUCTION
c/o BRANDON MOFFETT
1535 AMERICAN WAY
CEDAR HILL, TEXAS 76001
(682) 323-7700

AT&T BUILDING REMODEL
STRUCTURAL RENOVATION
3020 BROADWAY STREET
SAN ANTONIO, TEXAS 78215

REVISIONS:

NO.	DATE	ISSUE:

DGA Project Number: DGA-S-1925

Date: APRIL 25, 2019

Sheet Title
CMU & PLUMB. NOTES

Sheet Number
S4 of 22

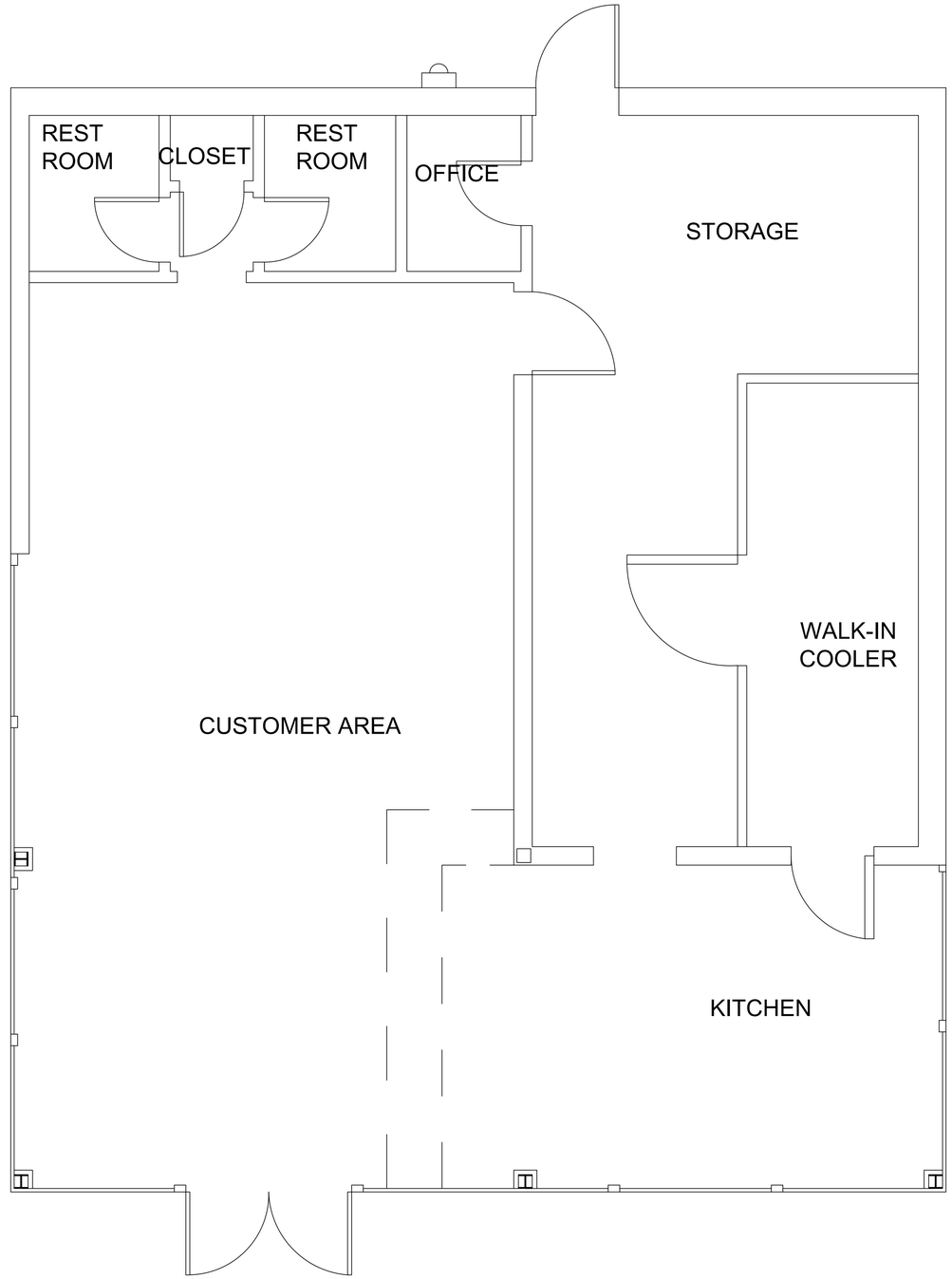

EXISTING FLOOR PLAN

SCALE: 1/2" = 1' - 0"

NORTH

STATE OF TEXAS
DONAL R GREEN
77140
LICENSED PROFESSIONAL ENGINEER
4/25/19

ENGINEER:

DGA
Consulting Engineers
Post Office Box 852697
Mesquite, Texas 75185
Phone: (214) 356-0797
www.dgaengineers.com
Texas Registered
Engineering Firm
F-12706

CONSULTANT:

OWNER'S REPRESENTATIVE:
MOFFETT CONSTRUCTION
c/o BRANDON MOFFETT
1535 AMERICAN WAY
CEDAR HILL, TEXAS 76001
(682) 323-7700

AT&T BUILDING REMODEL
STRUCTURAL RENOVATION
3020 BROADWAY STREET
SAN ANTONIO, TEXAS 78215

REVISIONS:

NO.	DATE	ISSUE:

DGA Project Number: DGA-S-1925
Date: APRIL 25, 2019

Sheet Title
EXISTING FLOORPLAN

Sheet Number
S5 of 22

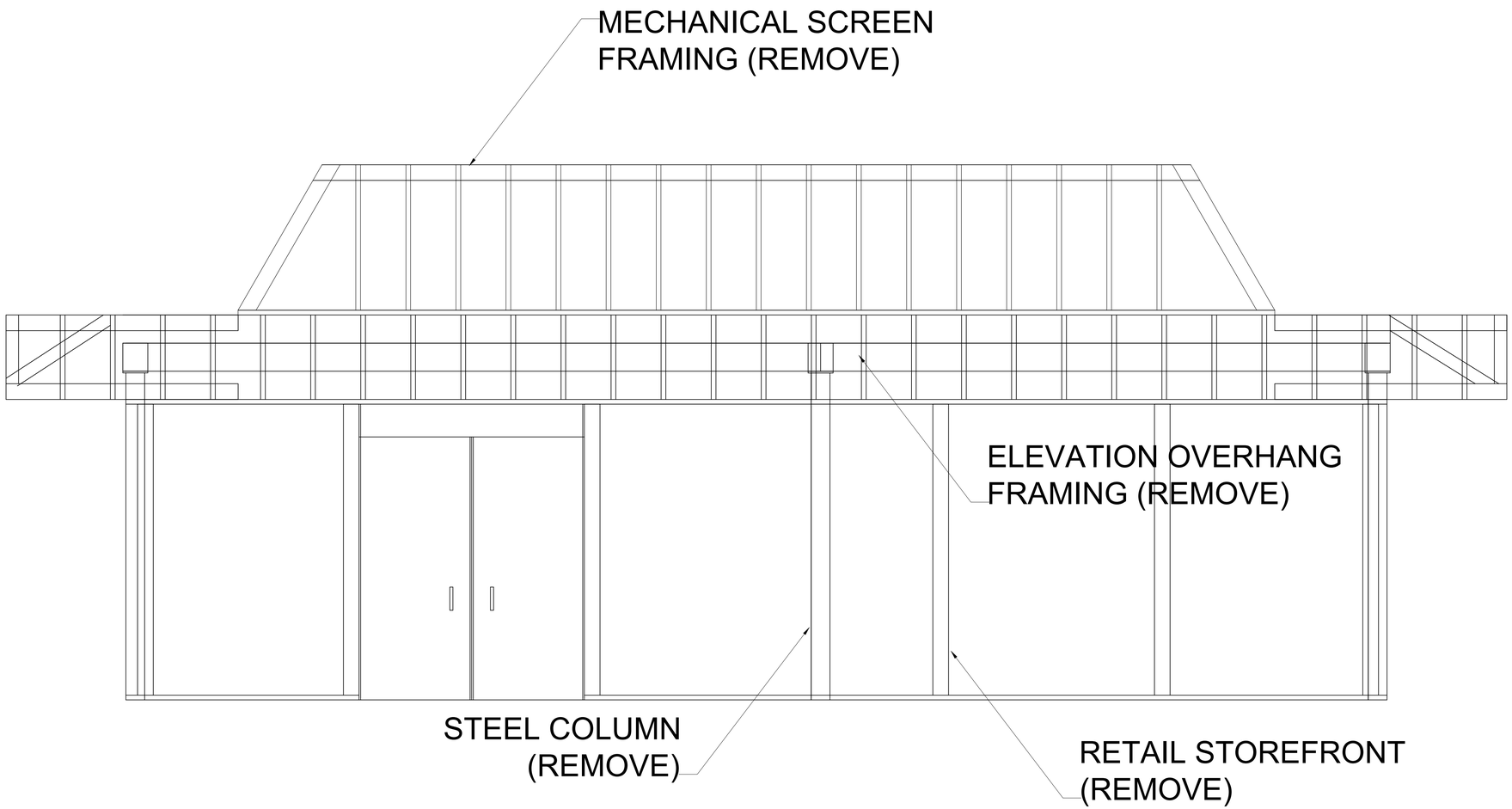

FRONT ELEVATION DEMO

SCALE: 1/2" = 1' - 0"

STATE OF TEXAS
DONAL R GREEN
77140
LICENSED
PROFESSIONAL ENGINEER
4/25/19

ENGINEER:

DGA
Consulting Engineers
Post Office Box 852697
Mesquite, Texas 75185
Phone: (214) 356-0797
www.dgaengineers.com
Texas Registered
Engineering Firm
F-12706

CONSULTANT:

OWNER'S REPRESENTATIVE:
MOFFETT CONSTRUCTION
c/o BRANDON MOFFETT
1535 AMERICAN WAY
CEDAR HILL, TEXAS 76001
(682) 323-7700

AT&T BUILDING REMODEL
STRUCTURAL RENOVATION
3020 BROADWAY STREET
SAN ANTONIO, TEXAS 78215

REVISIONS:

NO.	DATE	ISSUE:

DGA Project Number: DGA-S-1925
Date: APRIL 25, 2019
Sheet Title
FRONT ELEV.
DEMOLITION
Sheet Number
S6 of 22

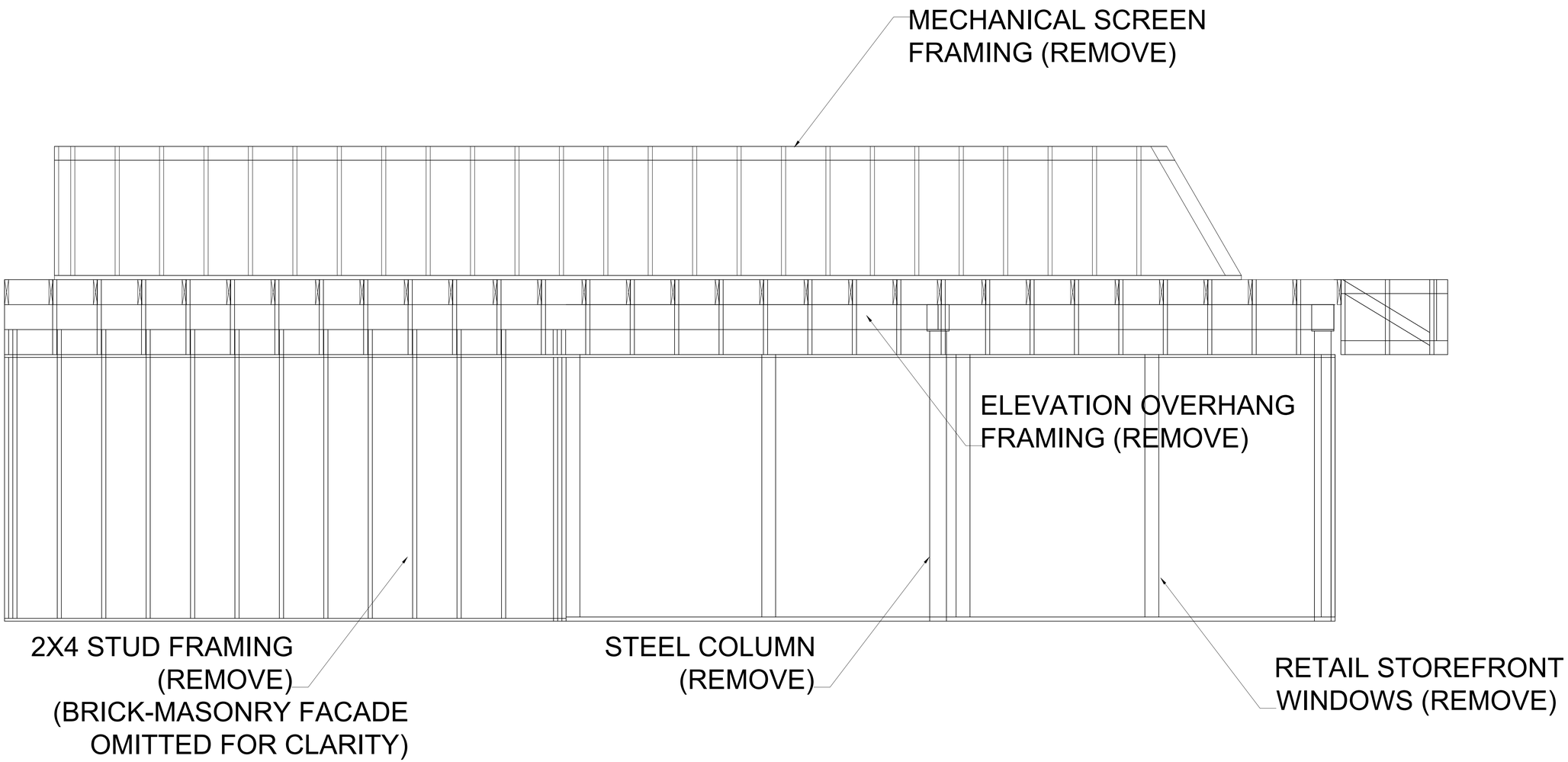

LEFT ELEVATION DEMO

SCALE: 1/2" = 1' - 0"

STATE OF TEXAS
DONAL R GREEN
77140
LICENSED PROFESSIONAL ENGINEER
4/25/19

ENGINEER:

DGA
Consulting Engineers
Post Office Box 852697
Mesquite, Texas 75185
Phone: (214) 356-0797
www.dgaengineers.com
Texas Registered Engineering Firm F-12706

CONSULTANT:

OWNER'S REPRESENTATIVE:
MOFFETT CONSTRUCTION
c/o BRANDON MOFFETT
1535 AMERICAN WAY
CEDAR HILL, TEXAS 76001
(682) 323-7700

AT&T BUILDING REMODEL
STRUCTURAL RENOVATION
3020 BROADWAY STREET
SAN ANTONIO, TEXAS 78215

REVISIONS:

NO.	DATE	ISSUE:

DGA Project Number: DGA-S-1925
Date: APRIL 25, 2019
Sheet Title
LEFT ELEVATION DEMOLITION
Sheet Number
S7 of 22

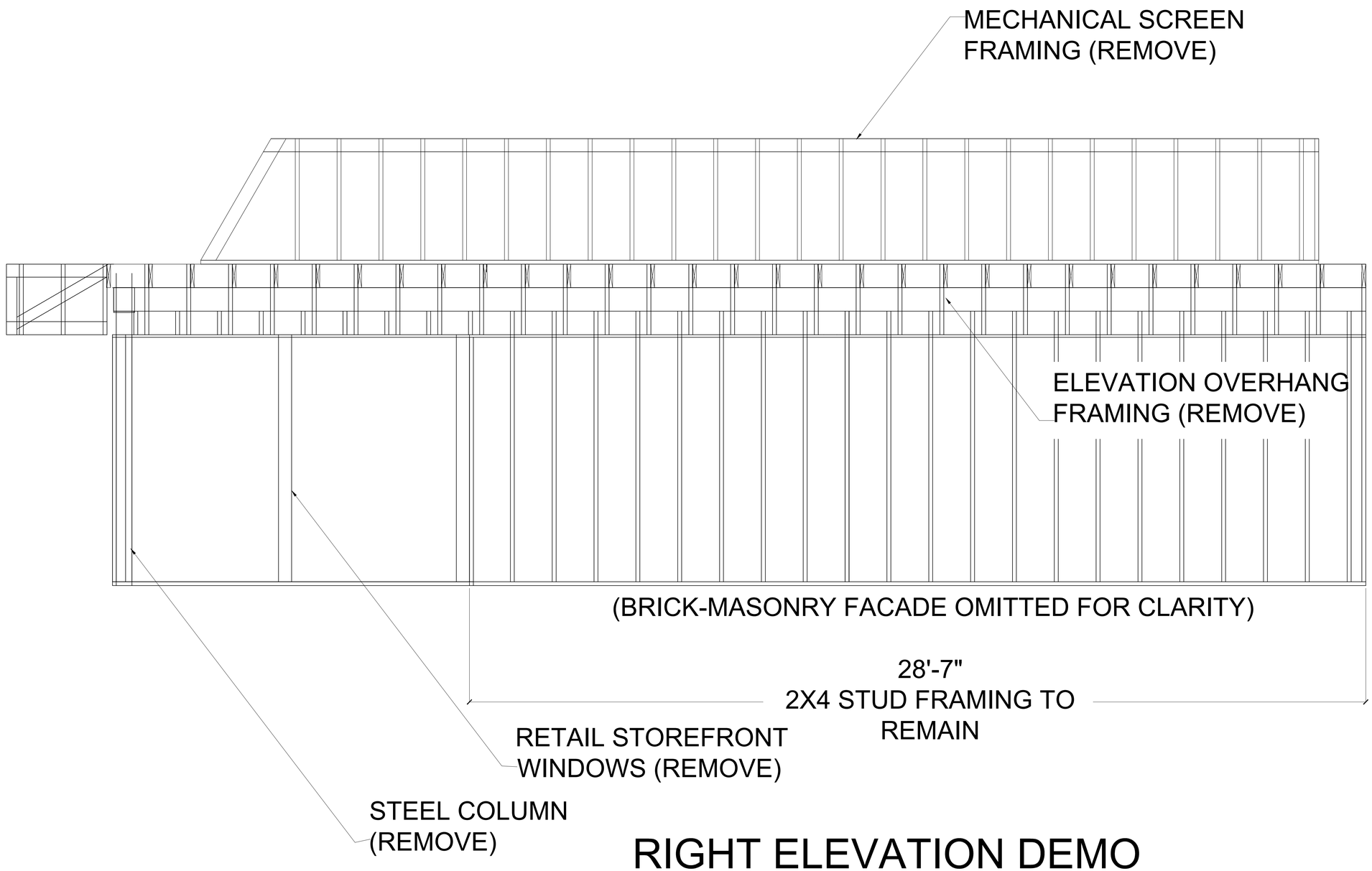

RIGHT ELEVATION DEMO

SCALE: 1/2" = 1' - 0"

STATE OF TEXAS
DONAL R GREEN
77140
LICENSED PROFESSIONAL ENGINEER
4/25/19

ENGINEER:

DGA
Consulting Engineers
Post Office Box 852697
Mesquite, Texas 75185
Phone: (214) 356-0797
www.dgaengineers.com
Texas Registered Engineering Firm F-12706

CONSULTANT:

OWNER'S REPRESENTATIVE:
MOFFETT CONSTRUCTION
c/o BRANDON MOFFETT
1535 AMERICAN WAY
CEDAR HILL, TEXAS 76001
(682) 323-7700

AT&T BUILDING REMODEL
STRUCTURAL RENOVATION
3020 BROADWAY STREET
SAN ANTONIO, TEXAS 78215

REVISIONS:

NO.	DATE	ISSUE:

DGA Project Number: DGA-S-1925
Date: APRIL 25, 2019
Sheet Title
RIGHT ELEV. DEMOLITION
Sheet Number
S8 of 22

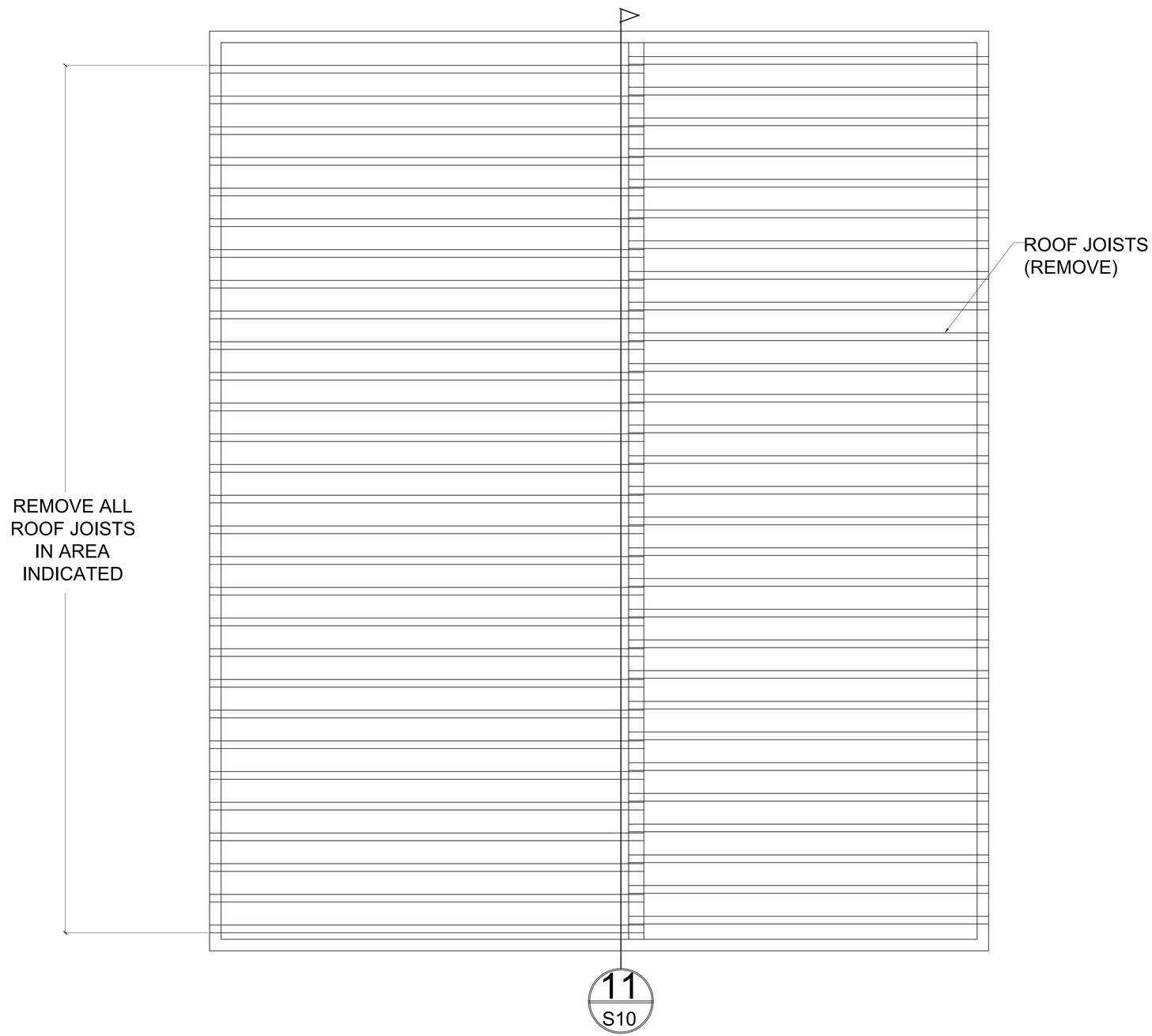

ROOF JOIST DEMOLITION

STATE OF TEXAS
DONAL R GREEN
77140
LICENSED
PROFESSIONAL ENGINEER
4/25/19

ENGINEER:

DGA
Consulting Engineers
Post Office Box 852697
Mesquite, Texas 75185
Phone: (214) 356-0797
www.dgaengineers.com
Texas Registered
Engineering Firm
F-12706

CONSULTANT:

OWNER'S REPRESENTATIVE:
MOFFETT CONSTRUCTION
c/o BRANDON MOFFETT
1535 AMERICAN WAY
CEDAR HILL, TEXAS 76001
(682) 323-7700

AT&T BUILDING REMODEL
STRUCTURAL RENOVATION
3020 BROADWAY STREET
SAN ANTONIO, TEXAS 78215

REVISIONS:

NO.	DATE	ISSUE:

DGA Project Number: DGA-S-1925
Date: APRIL 25, 2019
Sheet Title
ROOF DEMOLITION
Sheet Number
S9 of 22

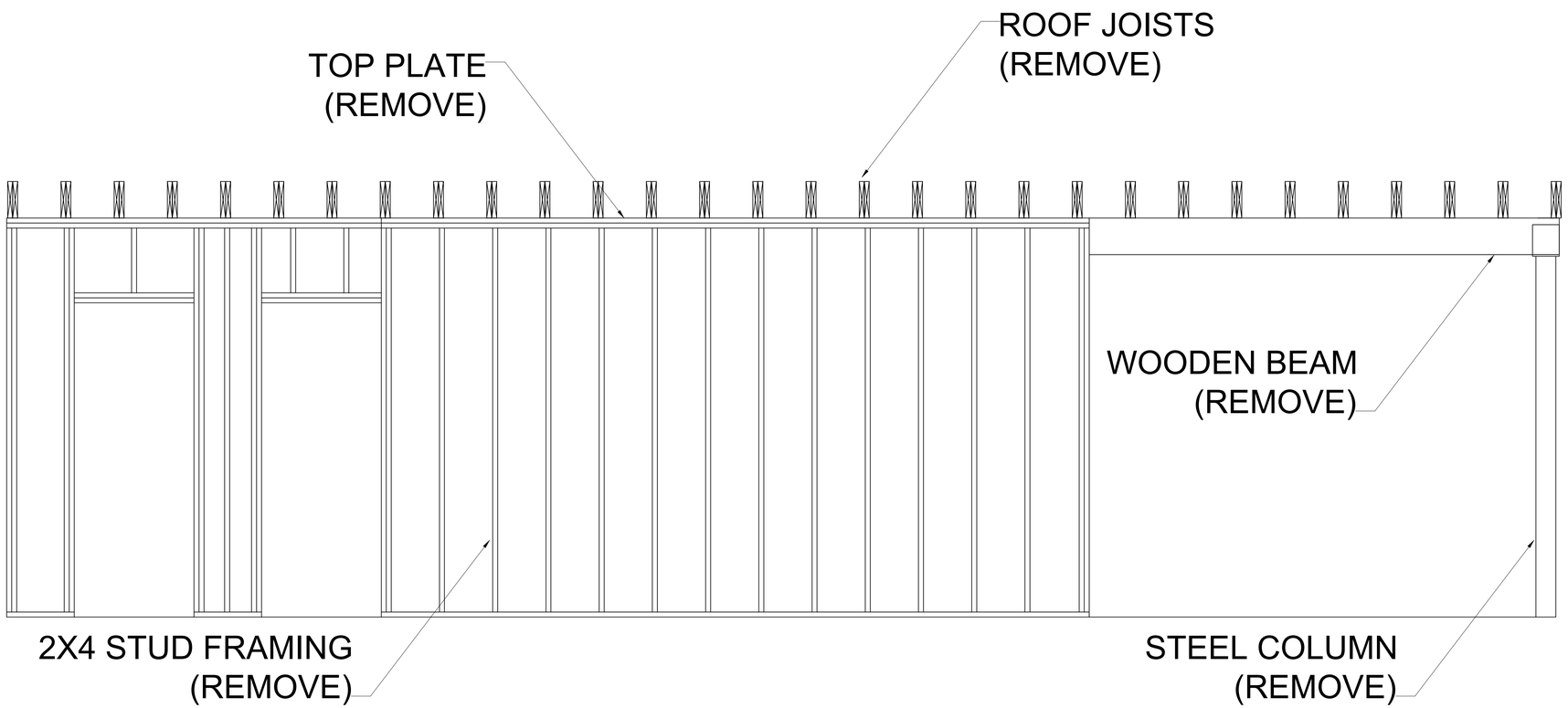

SECTION 11

INTERIOR WALL DEMOLITION

STATE OF TEXAS
DONAL R GREEN
77140
LICENSED
PROFESSIONAL ENGINEER
4/25/19

ENGINEER:

DGA
Consulting Engineers
Post Office Box 852697
Mesquite, Texas 75185
Phone: (214) 356-0797
www.dgaengineers.com
Texas Registered
Engineering Firm
F-12706

CONSULTANT:

OWNER'S REPRESENTATIVE:
MOFFETT CONSTRUCTION
c/o BRANDON MOFFETT
1535 AMERICAN WAY
CEDAR HILL, TEXAS 76001
(682) 323-7700

AT&T BUILDING REMODEL
STRUCTURAL RENOVATION
3020 BROADWAY STREET
SAN ANTONIO, TEXAS 78215

REVISIONS:

NO.	DATE	ISSUE:

DGA Project Number: DGA-S-1925
Date: APRIL 25, 2019
Sheet Title
INTERIOR WALL DEMOLITION
Sheet Number
S10 of 22

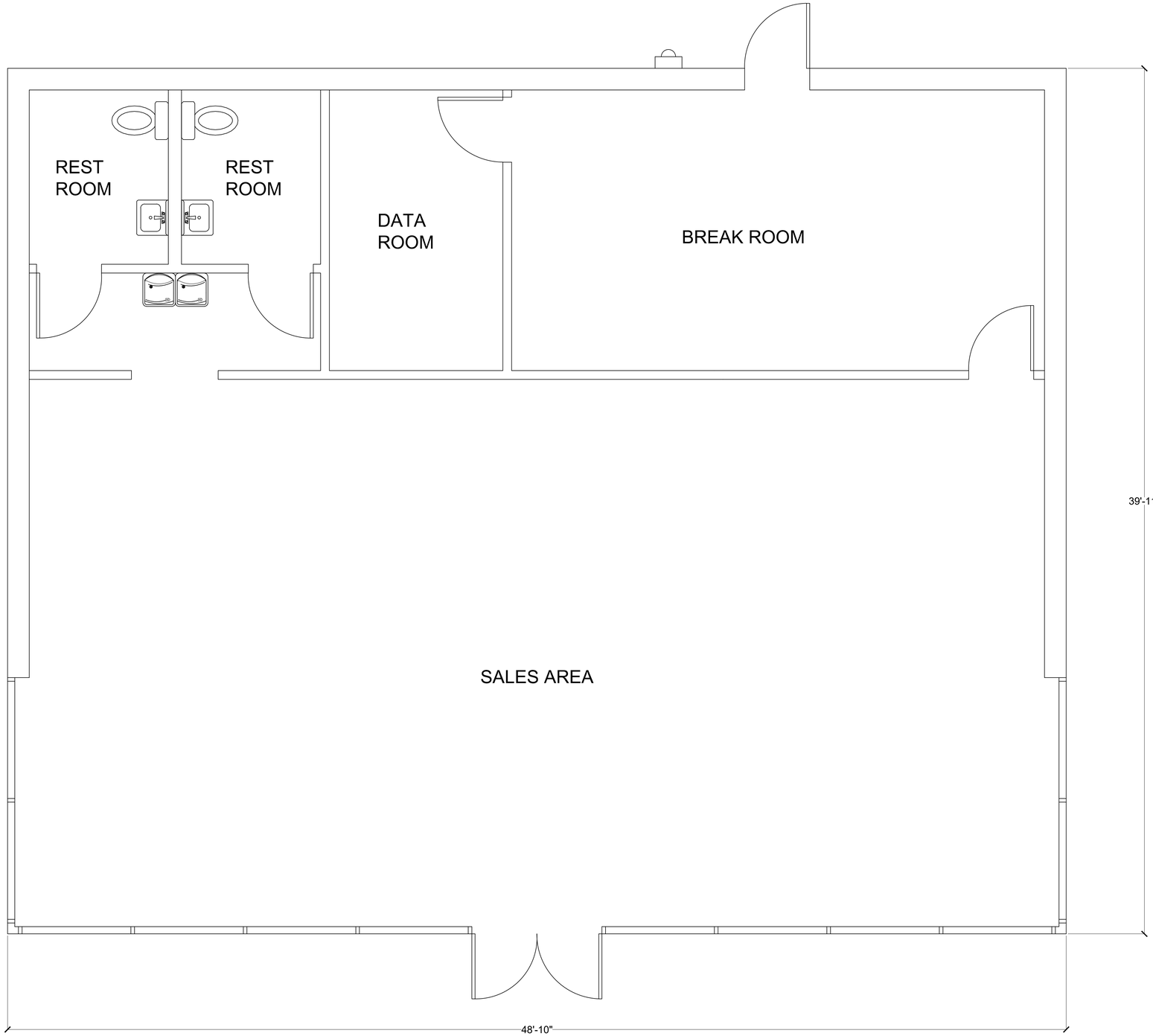

PROPOSED FLOOR PLAN

SCALE: 0' 5' 10'

NORTH

STATE OF TEXAS
DONAL R GREEN
77140
LICENSED PROFESSIONAL ENGINEER
4/25/19

ENGINEER:

DGA
Consulting Engineers
Post Office Box 852697
Mesquite, Texas 75185
Phone: (214) 356-0797
www.dgaengineers.com
Texas Registered
Engineering Firm
F-12706

CONSULTANT:

OWNER'S REPRESENTATIVE:
MOFFETT CONSTRUCTION
c/o BRANDON MOFFETT
1535 AMERICAN WAY
CEDAR HILL, TEXAS 76001
(682) 323-7700

AT&T BUILDING REMODEL

STRUCTURAL RENOVATION
3020 BROADWAY STREET
SAN ANTONIO, TEXAS 78215

REVISIONS:

NO.	DATE	ISSUE:

DGA Project Number: DGA-S-1925

Date: APRIL 25, 2019

Sheet Title
PROPOSED FLOORPLAN

Sheet Number
S11 of 22

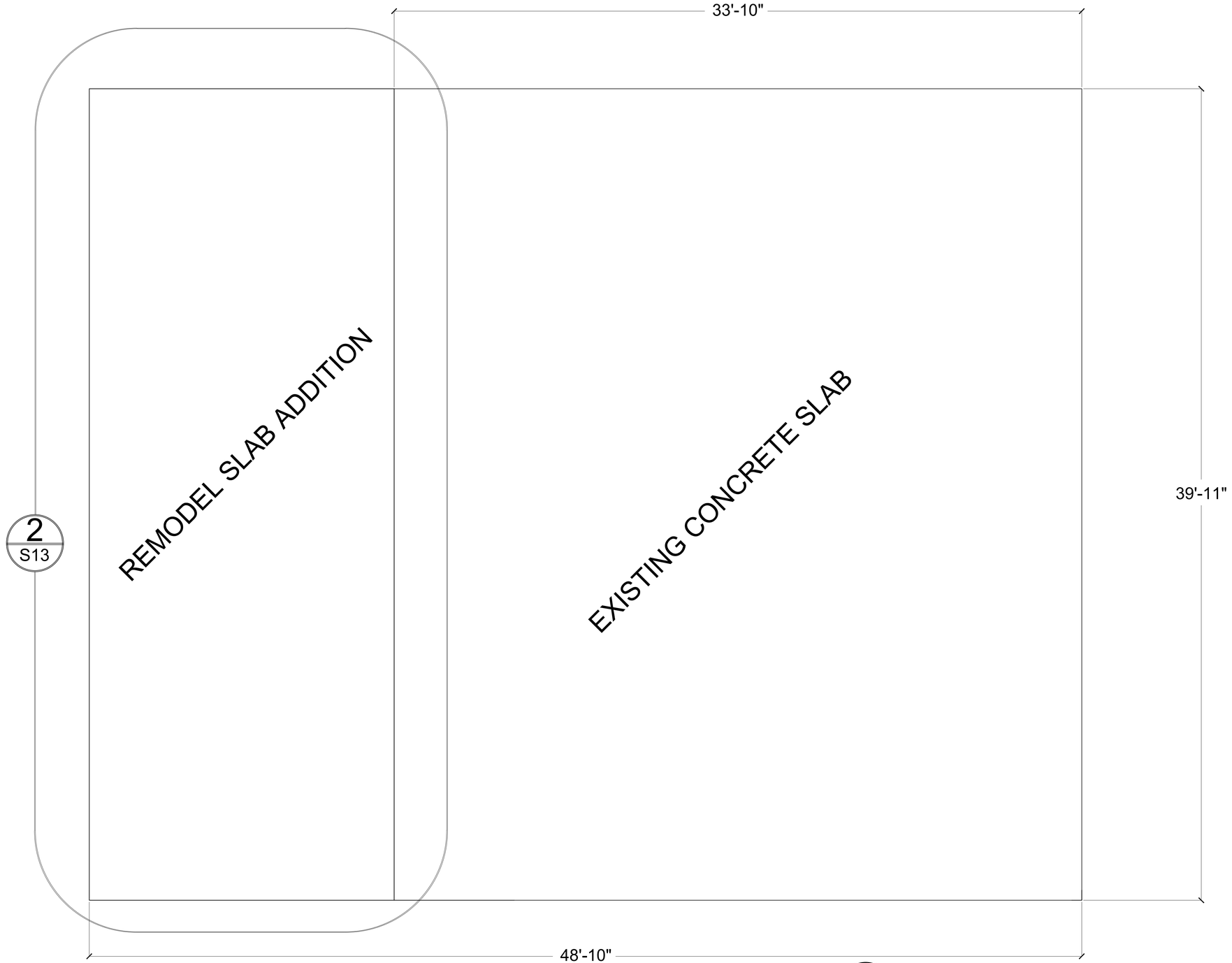

CONCRETE SLAB FOUNDATION

SCALE: 0' 5' 10'

NORTH

STATE OF TEXAS
DONAL R GREEN
77140
LICENSED
PROFESSIONAL ENGINEER

4/25/19

ENGINEER:

DGA
Consulting Engineers
Post Office Box 852697
Mesquite, Texas 75185

Phone: (214) 356-0797

www.dgaengineers.com

Texas Registered
Engineering Firm
F-12706

CONSULTANT:

OWNER'S REPRESENTATIVE:
MOFFETT CONSTRUCTION
c/o BRANDON MOFFETT
1535 AMERICAN WAY
CEDAR HILL, TEXAS 76001
(682) 323-7700

AT&T BUILDING REMODEL

STRUCTURAL RENOVATION
3020 BROADWAY STREET
SAN ANTONIO, TEXAS 78215

REVISIONS:

NO.	DATE	ISSUE:

DGA Project Number: DGA-S-1925

Date: APRIL 25, 2019

Sheet Title
CONCRETE SLAB FOUNDATION

Sheet Number
S12 of 22

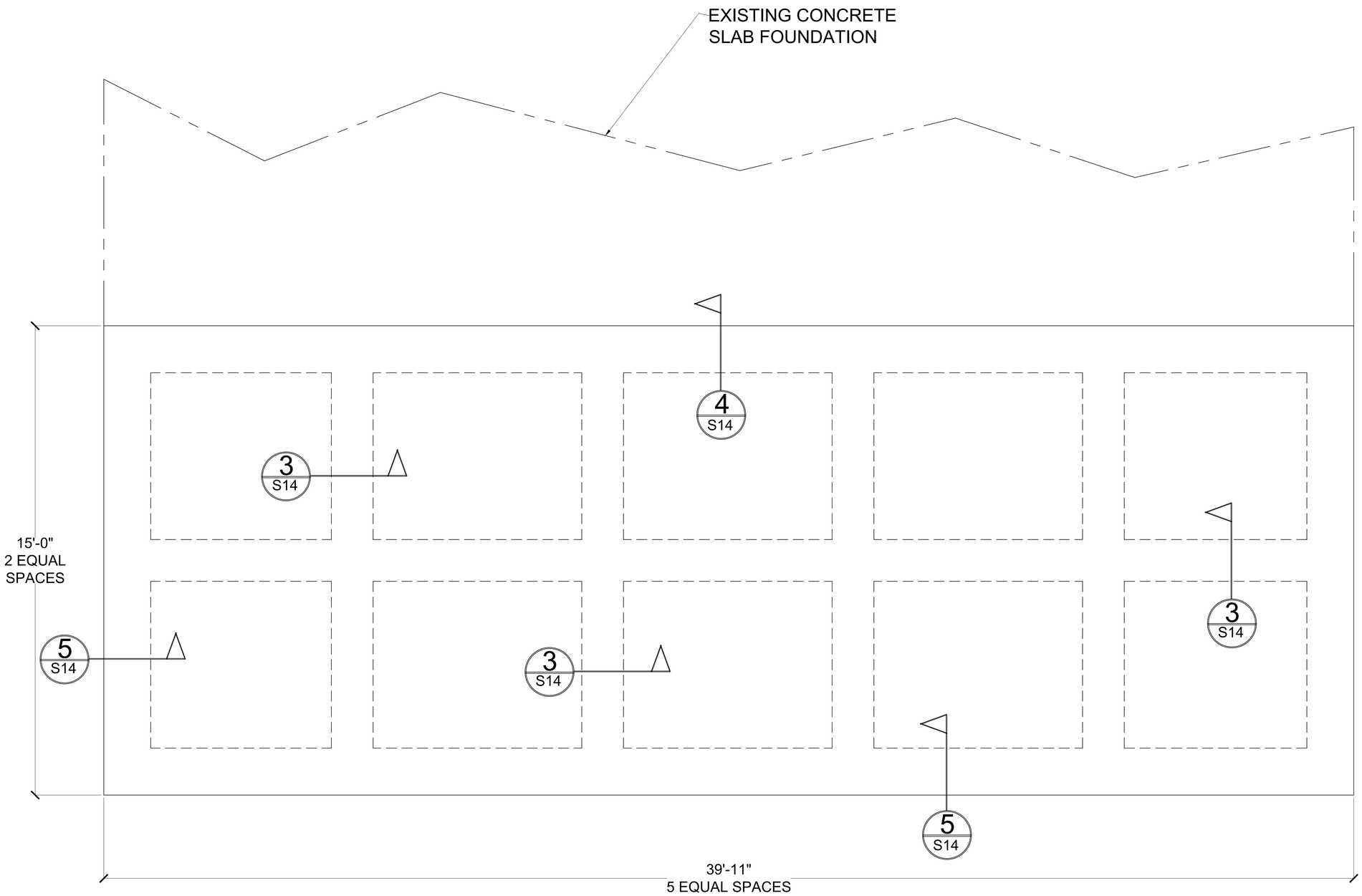

DETAIL 2

REMODEL SLAB ADDITION

ENGINEER:

DGA
Consulting Engineers
Post Office Box 852697
Mesquite, Texas 75185

Phone: (214) 356-0797

www.dgaengineers.com

Texas Registered
Engineering Firm
F-12706

CONSULTANT:

OWNER'S REPRESENTATIVE:
MOFFETT CONSTRUCTION
c/o BRANDON MOFFETT
1535 AMERICAN WAY
CEDAR HILL, TEXAS 76001
(682) 323-7700

AT&T BUILDING REMODEL
STRUCTURAL RENOVATION
3020 BROADWAY STREET
SAN ANTONIO, TEXAS 78215

REVISIONS:

NO.	DATE	ISSUE:

STATE OF TEXAS
DONAL R GREEN
77140
LICENSED
PROFESSIONAL ENGINEER
4/25/19

DGA Project Number: DGA-S-1925
Date: APRIL 25, 2019

Sheet Title
REMODEL SLAB ADDITION

Sheet Number
S13 of 22

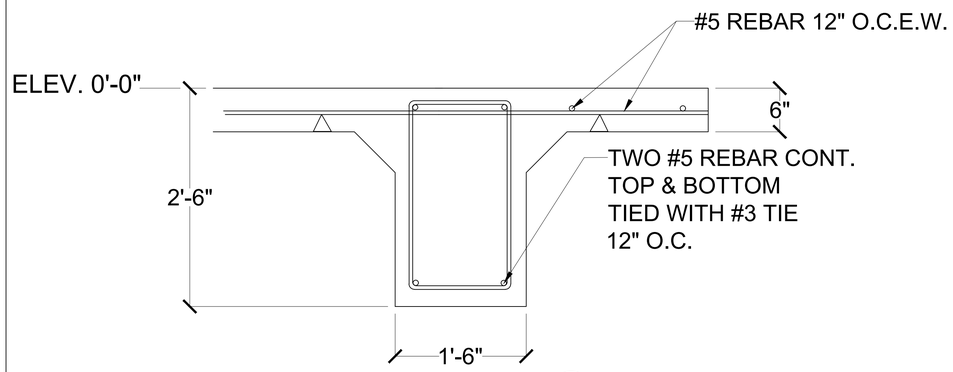

DETAIL 3

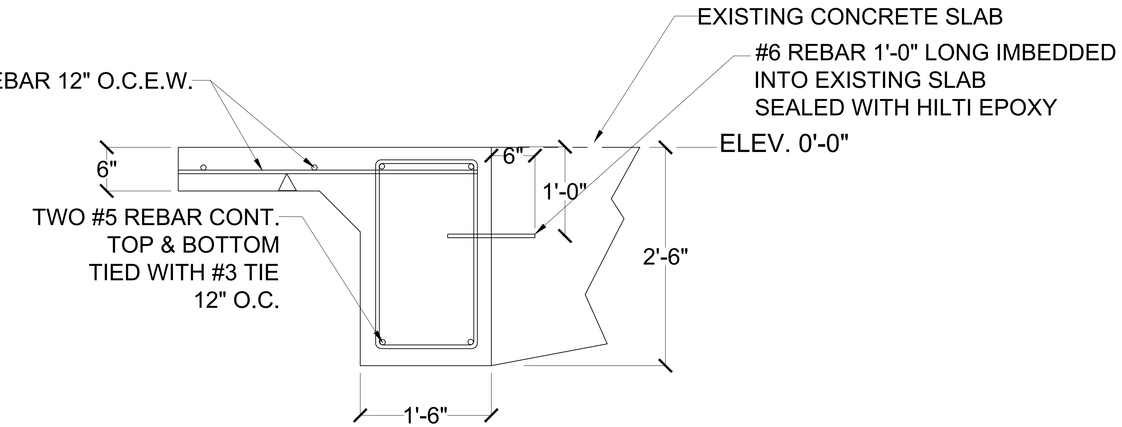

DETAIL 4

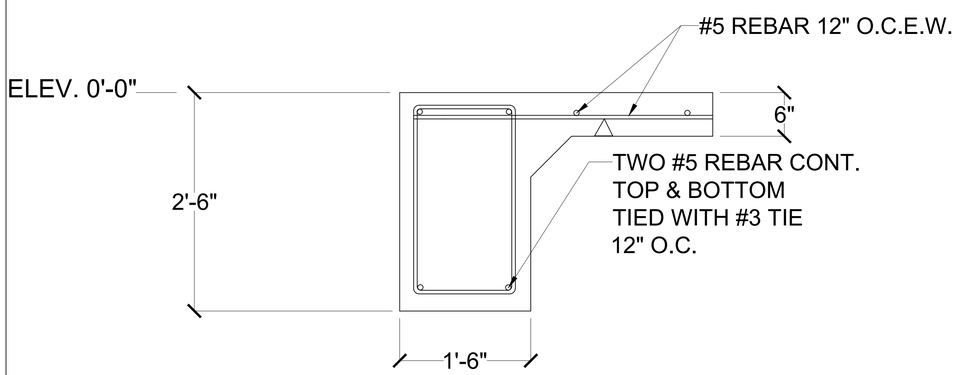

DETAIL 5

STATE OF TEXAS
DONAL R GREEN
77140
LICENSED
PROFESSIONAL ENGINEER
4/25/19

ENGINEER:

DGA
Consulting Engineers

Post Office Box 852697
Mesquite, Texas 75185

Phone: (214) 356-0797

www.dgaengineers.com

Texas Registered
Engineering Firm
F-12706

CONSULTANT:

OWNER'S REPRESENTATIVE:
MOFFETT CONSTRUCTION
c/o BRANDON MOFFETT
1535 AMERICAN WAY
CEDAR HILL, TEXAS 76001
(682) 323-7700

AT&T BUILDING REMODEL
STRUCTURAL RENOVATION
3020 BROADWAY STREET
SAN ANTONIO, TEXAS 78215

REVISIONS:

NO.	DATE	ISSUE:

DGA Project Number: DGA-S-1925

Date: APRIL 25, 2019

Sheet Title
SLAB ADDITION SECTIONS

Sheet Number
S14 of 22

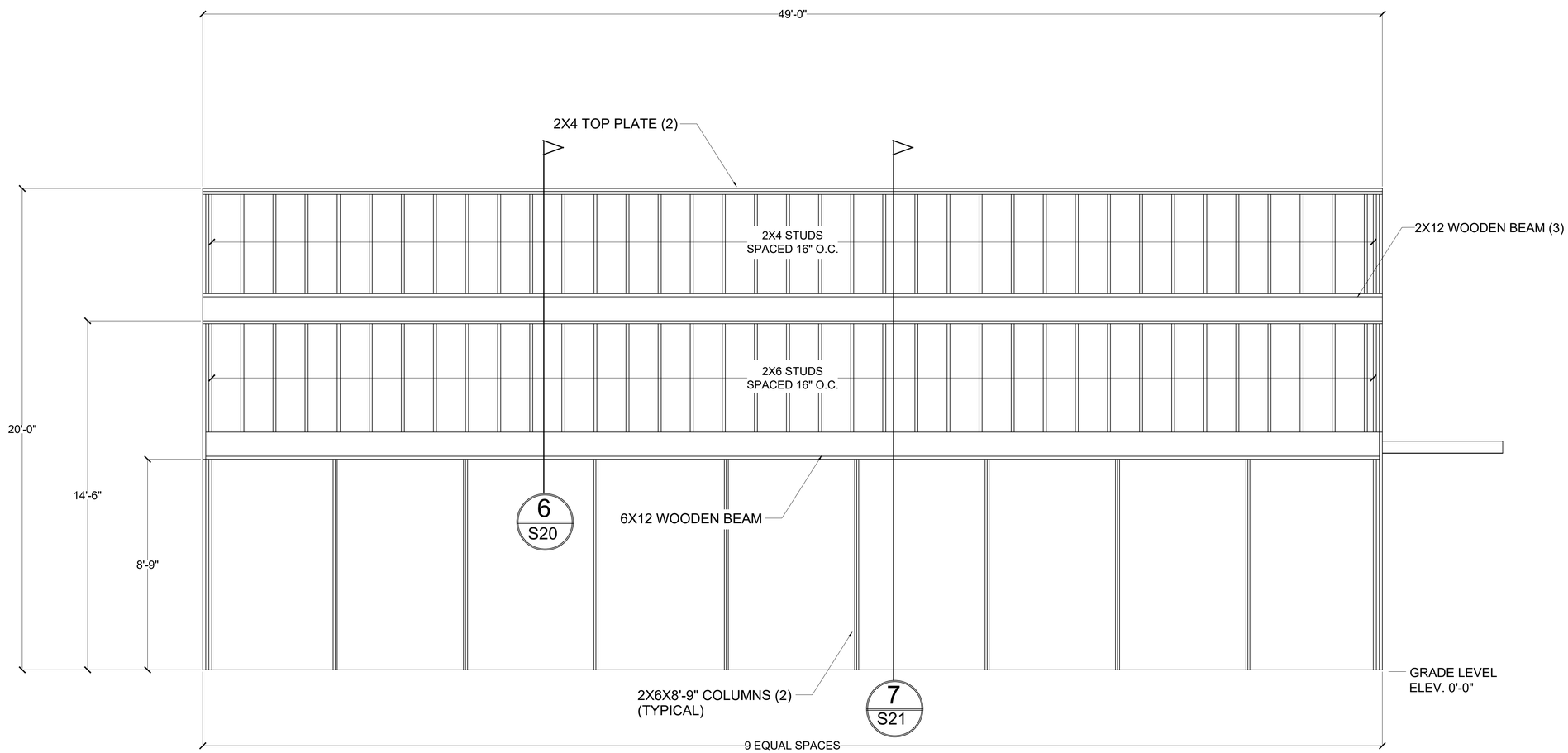

FRONT ELEVATION FRAMING

SCALE: 0' 5' 10'

ENGINEER:

DGA
Consulting Engineers
Post Office Box 852697
Mesquite, Texas 75185
Phone: (214) 356-0797
www.dgaengineers.com
Texas Registered
Engineering Firm
F-12706

CONSULTANT:

OWNER'S REPRESENTATIVE:
MOFFETT CONSTRUCTION
c/o BRANDON MOFFETT
1535 AMERICAN WAY
CEDAR HILL, TEXAS 76001
(682) 323-7700

AT&T BUILDING REMODEL
STRUCTURAL RENOVATION
3020 BROADWAY STREET
SAN ANTONIO, TEXAS 78215

REVISIONS:

NO.	DATE	ISSUE:

STATE OF TEXAS
DONAL R GREEN
77140
LICENSED
PROFESSIONAL ENGINEER
4/25/19

DGA Project Number: DGA-S-1925
Date: APRIL 25, 2019

Sheet Title
FRONT ELEV. FRAMING

Sheet Number
S15 of 22

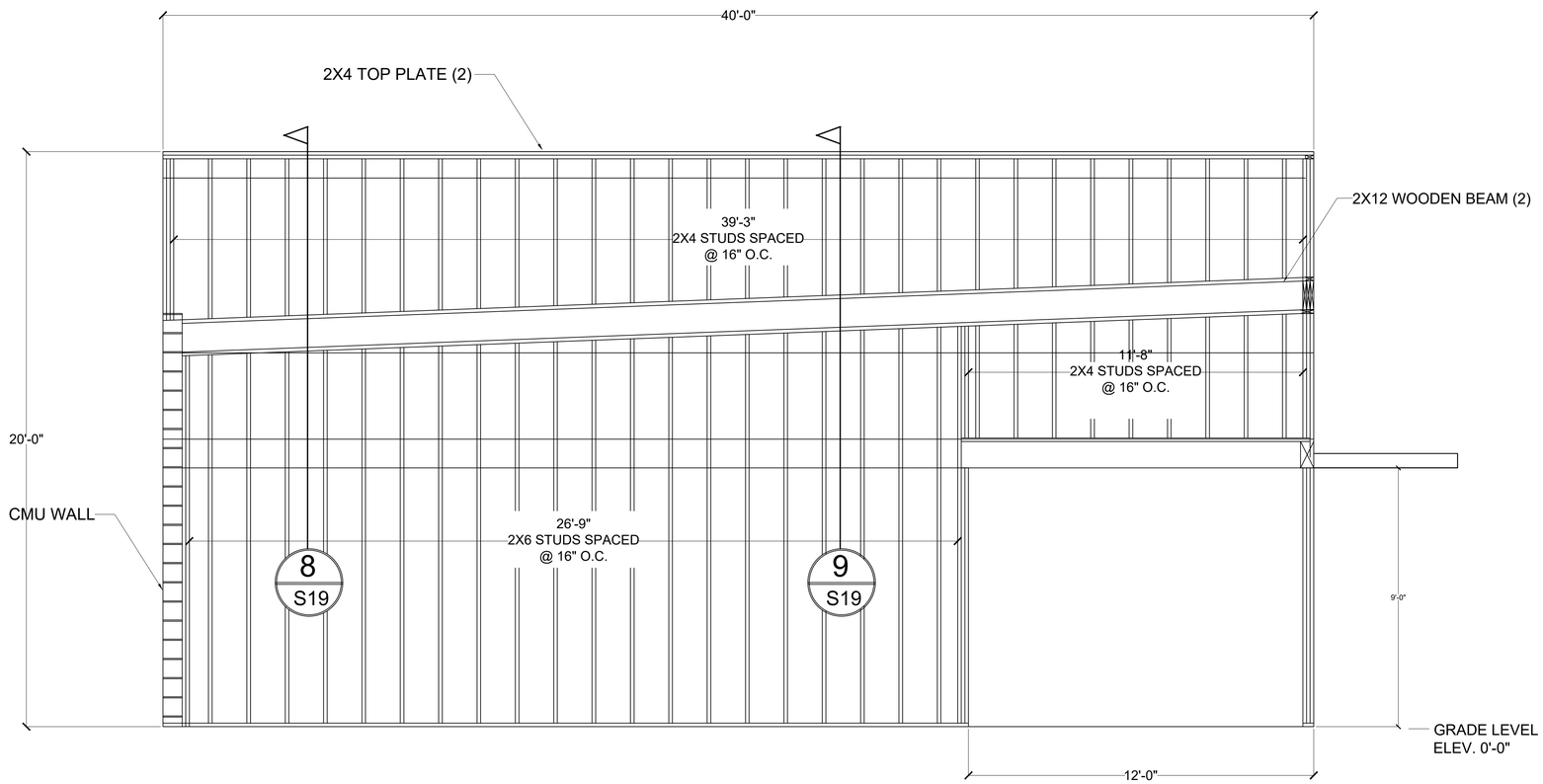

LEFT-SIDE ELEVATION FRAMING

SCALE: 0' 5' 10'

ENGINEER:

DGA
Consulting Engineers
Post Office Box 852697
Mesquite, Texas 75185
Phone: (214) 356-0797
www.dgaengineers.com
Texas Registered
Engineering Firm
F-12706

CONSULTANT:

OWNER'S REPRESENTATIVE:
MOFFETT CONSTRUCTION
c/o BRANDON MOFFETT
1535 AMERICAN WAY
CEDAR HILL, TEXAS 76001
(682) 323-7700

AT&T BUILDING REMODEL
STRUCTURAL RENOVATION
3020 BROADWAY STREET
SAN ANTONIO, TEXAS 78215

REVISIONS:

NO.	DATE	ISSUE:

STATE OF TEXAS
DONAL R GREEN
77140
LICENSED
PROFESSIONAL ENGINEER
4/25/19

DGA Project Number: DGA-S-1925
Date: APRIL 25, 2019
Sheet Title
LEFT SIDE
ELEV. FRAMING
Sheet Number
S16 of 22

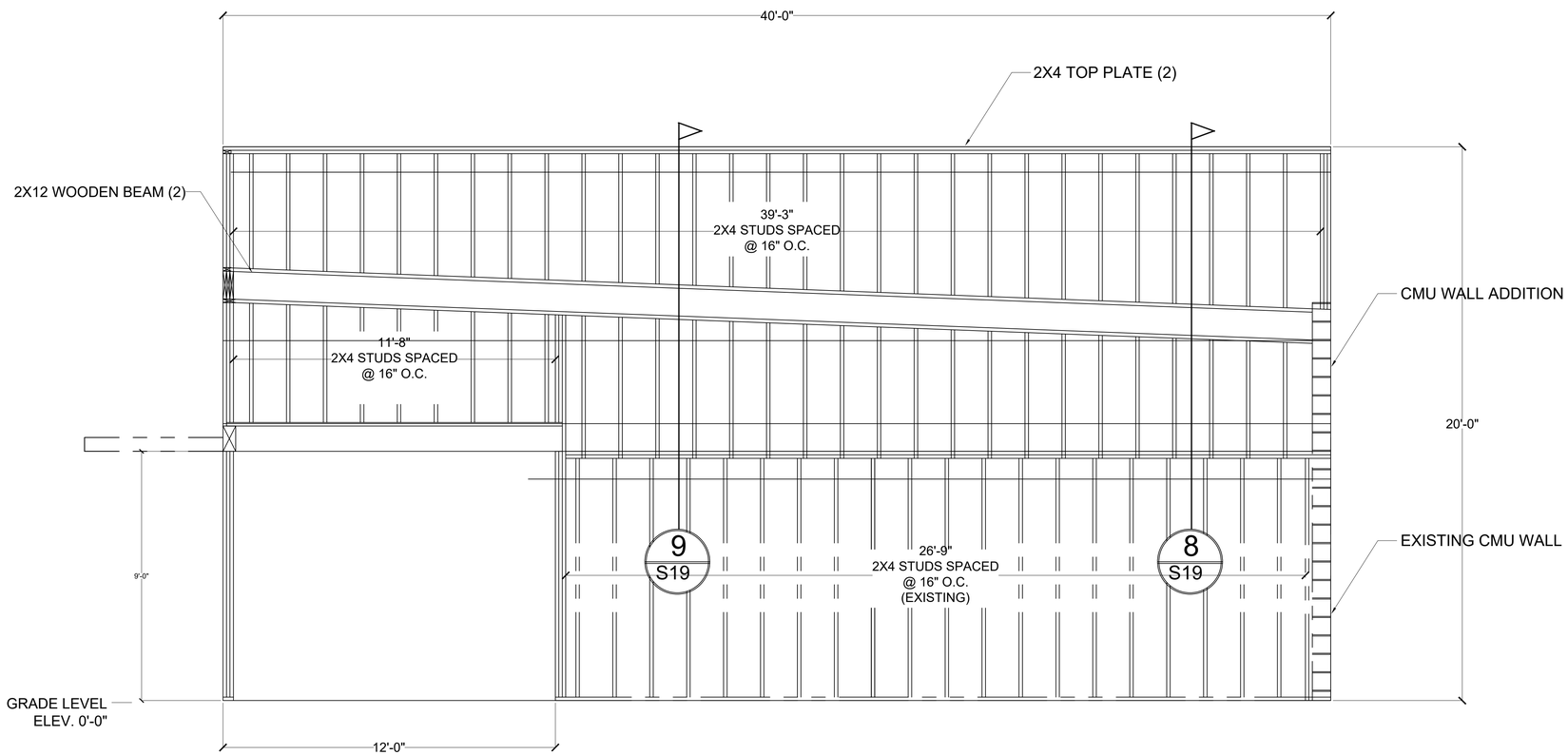

RIGHT-SIDE ELEVATION FRAMING

SCALE: 0' 5' 10'

4/25/19

ENGINEER:

DGA
Consulting Engineers
Post Office Box 852697
Mesquite, Texas 75185

Phone: (214) 356-0797

www.dgaengineers.com

Texas Registered
Engineering Firm
F-12706

CONSULTANT:

OWNER'S REPRESENTATIVE:
MOFFETT CONSTRUCTION
c/o BRANDON MOFFETT
1535 AMERICAN WAY
CEDAR HILL, TEXAS 76001
(682) 323-7700

AT&T BUILDING REMODEL
STRUCTURAL RENOVATION
3020 BROADWAY STREET
SAN ANTONIO, TEXAS 78215

REVISIONS:

NO.	DATE	ISSUE:

DGA Project Number: DGA-S-1925

Date: APRIL 25, 2019

Sheet Title
RIGHT SIDE
ELEV. FRAMING

Sheet Number
S17 of 22

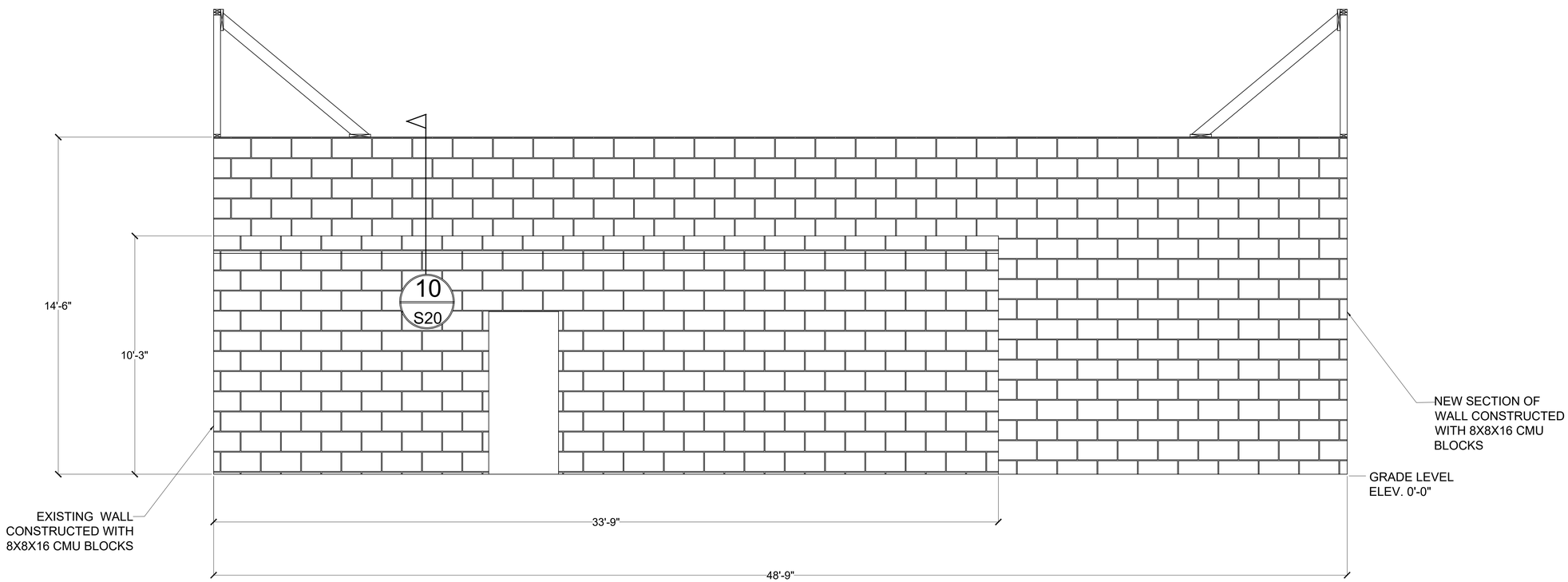

REAR ELEVATION FRAMING

SCALE: 0' 5' 10'

ENGINEER:

DGA
Consulting Engineers
Post Office Box 852697
Mesquite, Texas 75185
Phone: (214) 356-0797
www.dgaengineers.com
Texas Registered
Engineering Firm
F-12706

CONSULTANT:

OWNER'S REPRESENTATIVE:
MOFFETT CONSTRUCTION
c/o BRANDON MOFFETT
1535 AMERICAN WAY
CEDAR HILL, TEXAS 76001
(682) 323-7700

AT&T BUILDING REMODEL

STRUCTURAL RENOVATION
3020 BROADWAY STREET
SAN ANTONIO, TEXAS 78215

REVISIONS:

NO.	DATE	ISSUE:

STATE OF TEXAS
DONAL R GREEN
77140
LICENSED
PROFESSIONAL ENGINEER
4/25/19

DGA Project Number: DGA-S-1925
Date: APRIL 25, 2019
Sheet Title
REAR ELEVATION FRAMING
Sheet Number
S18 of 22

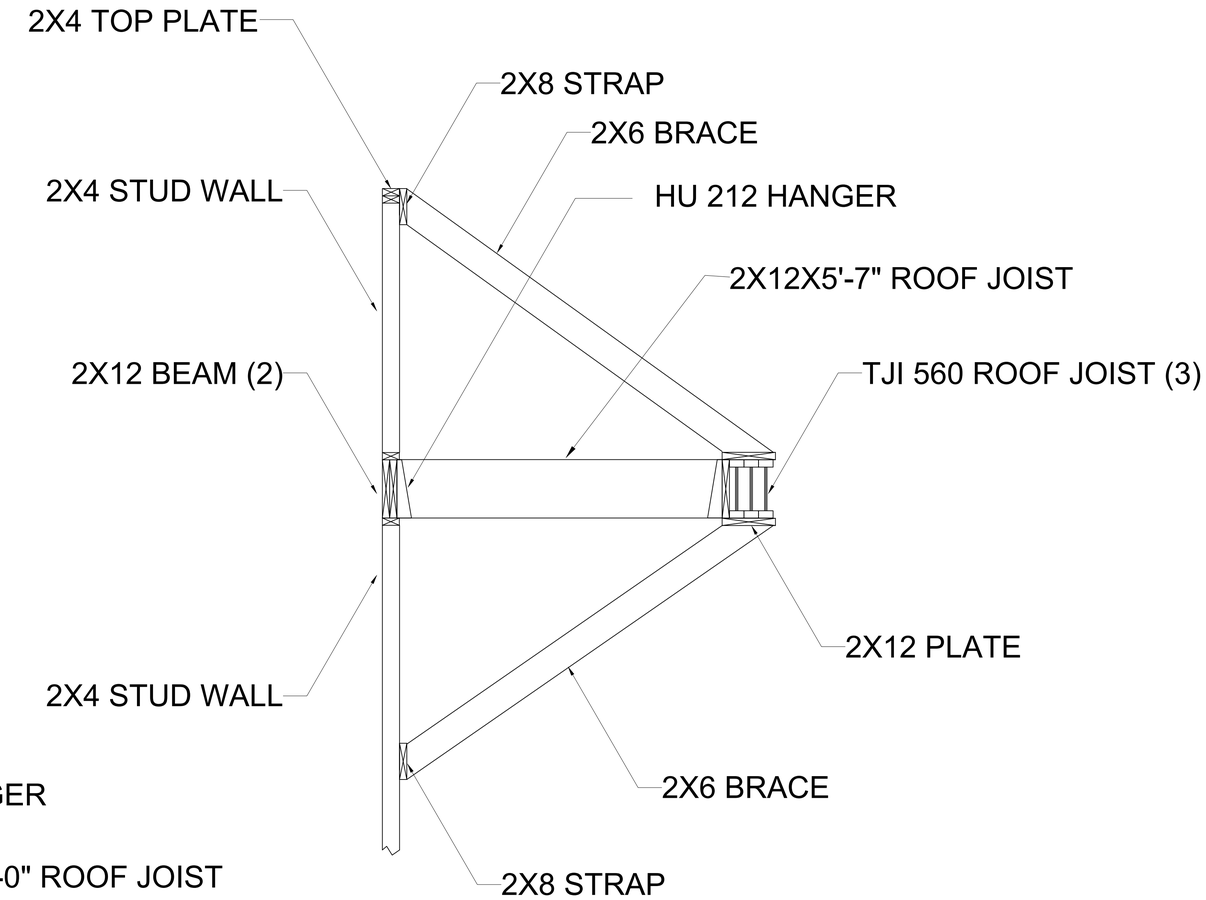

SECTION 9
(SPACED 5' O.C.)

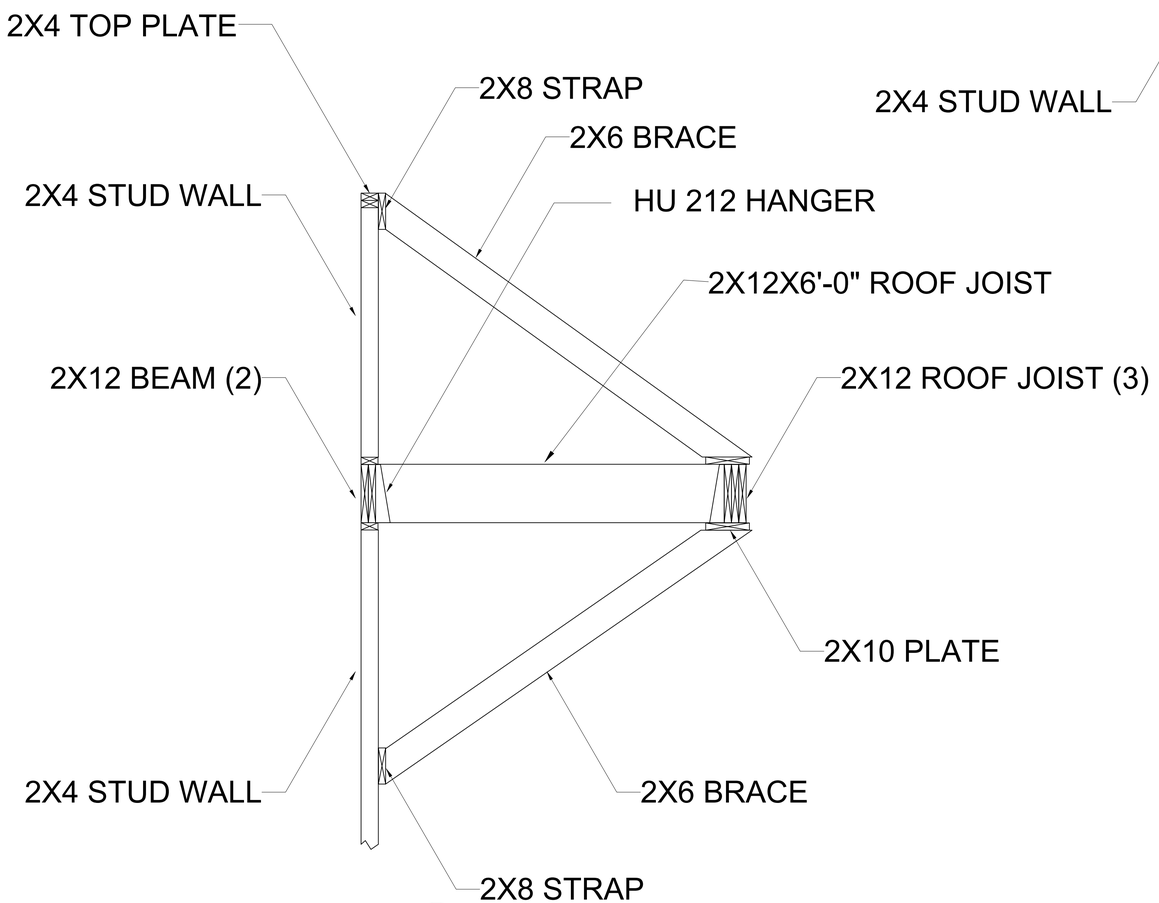

SECTION 8
(SPACED 5' O.C.)

ENGINEER:

DGA
Consulting Engineers
Post Office Box 852697
Mesquite, Texas 75185
Phone: (214) 356-0797
www.dgaengineers.com
Texas Registered
Engineering Firm
F-12706

CONSULTANT:

OWNER'S REPRESENTATIVE:
MOFFETT CONSTRUCTION
c/o BRANDON MOFFETT
1535 AMERICAN WAY
CEDAR HILL, TEXAS 76001
(682) 323-7700

AT&T BUILDING REMODEL
STRUCTURAL RENOVATION
3020 BROADWAY STREET
SAN ANTONIO, TEXAS 78215

REVISIONS:

NO.	DATE	ISSUE:

STATE OF TEXAS
DONAL R GREEN
77140
LICENSED
PROFESSIONAL ENGINEER
4/25/19

DGA Project Number: DGA-S-1925
Date: APRIL 25, 2019
Sheet Title
FRAMING SECTIONS
Sheet Number
S19 of 22

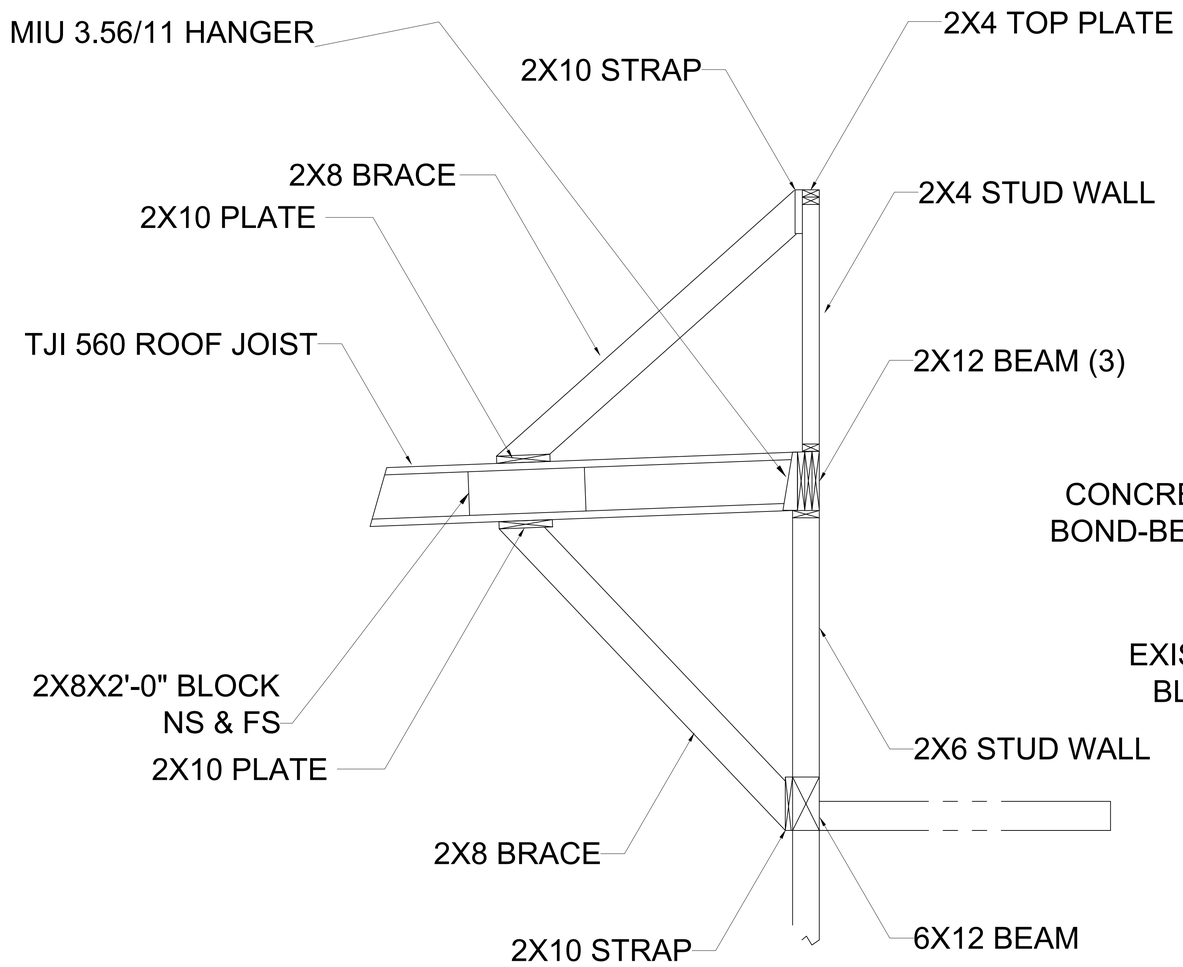

SECTION 6
(SPACED 5' O.C.)

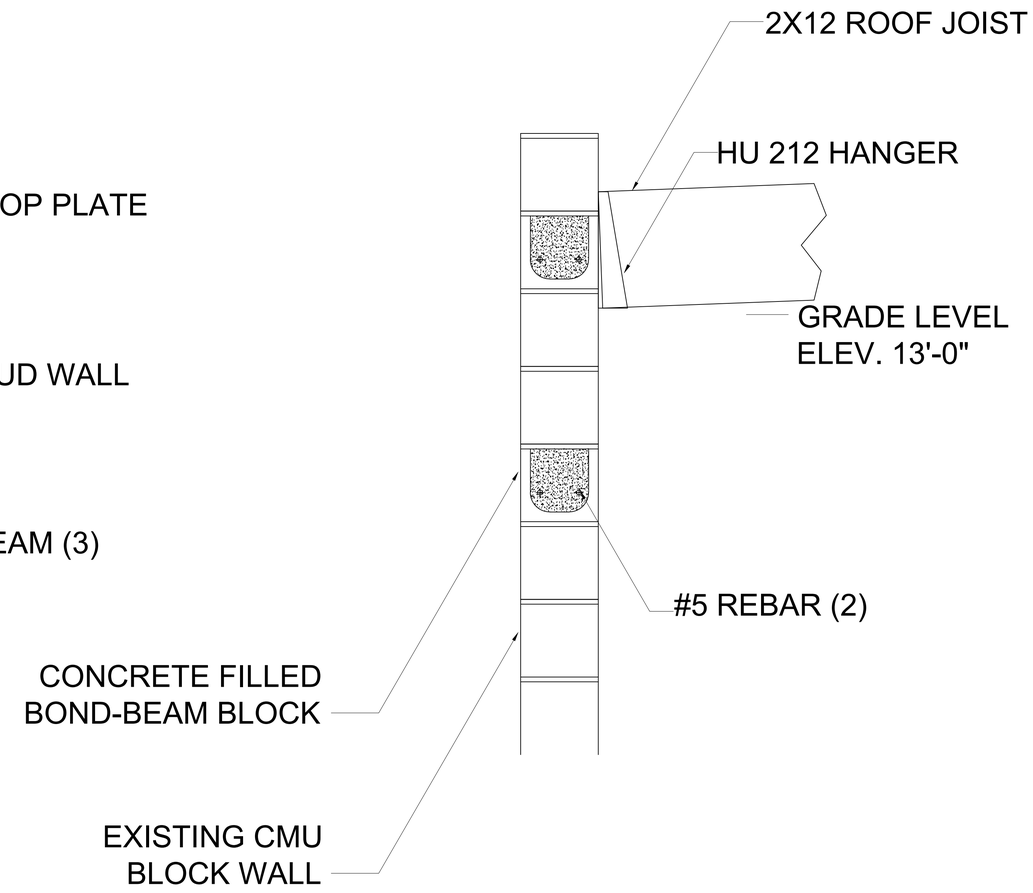

SECTION 10

STATE OF TEXAS
DONAL R GREEN
77140
LICENSED
PROFESSIONAL ENGINEER
4/25/19

ENGINEER:

DGA
Consulting Engineers
Post Office Box 852697
Mesquite, Texas 75185
Phone: (214) 356-0797
www.dgaengineers.com
Texas Registered
Engineering Firm
F-12706

CONSULTANT:

OWNER'S REPRESENTATIVE:
MOFFETT CONSTRUCTION
c/o BRANDON MOFFETT
1535 AMERICAN WAY
CEDAR HILL, TEXAS 76001
(682) 323-7700

AT&T BUILDING REMODEL
STRUCTURAL RENOVATION
3020 BROADWAY STREET
SAN ANTONIO, TEXAS 78215

REVISIONS:

NO.	DATE	ISSUE:

DGA Project Number: DGA-S-1925
Date: APRIL 25, 2019

Sheet Title
FRAMING
SECTIONS II
Sheet Number
S20 of 22

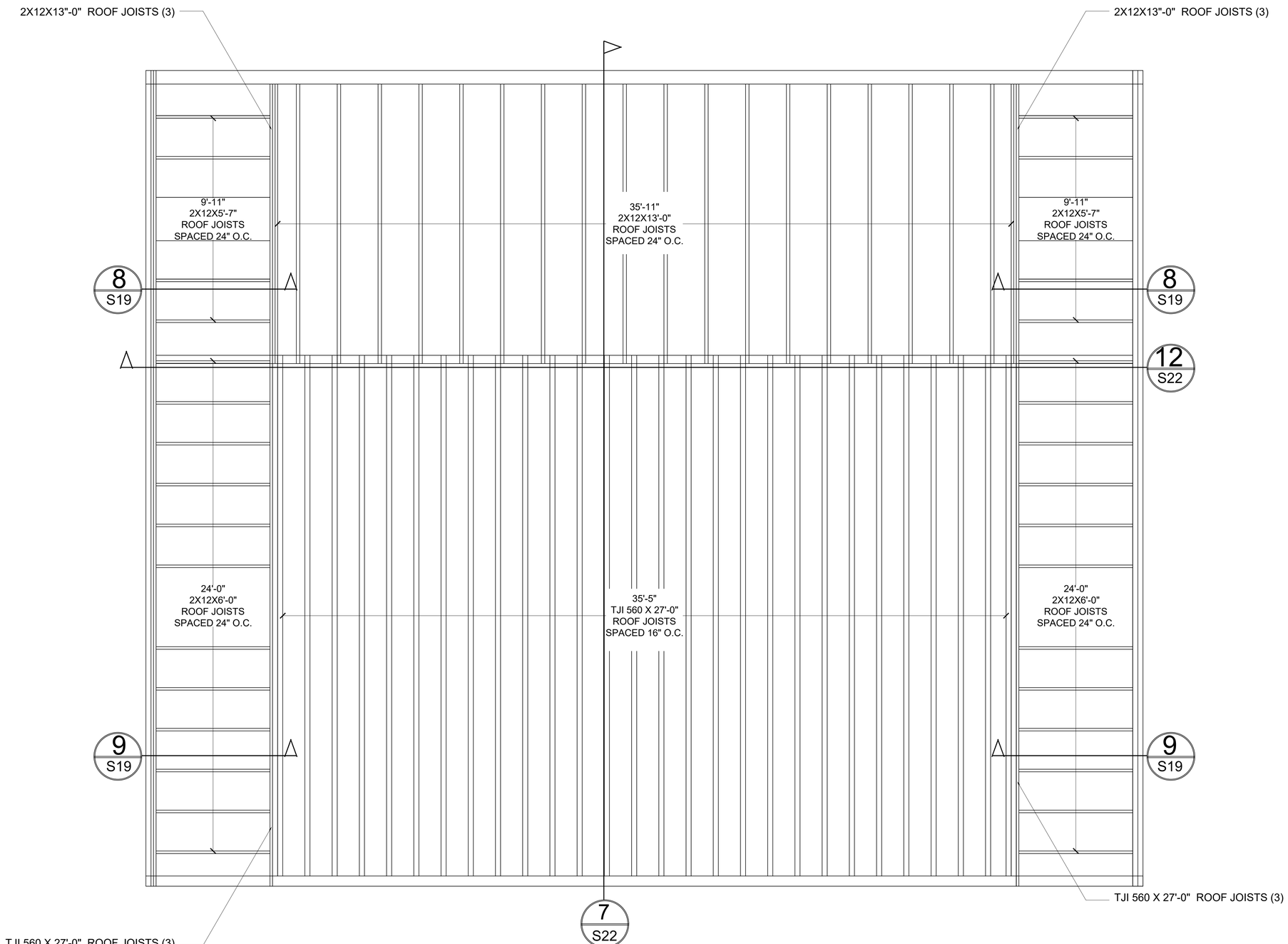

ROOF FRAMING PLAN

SCALE: 0' 5' 10'

NORTH

STATE OF TEXAS
DONAL R GREEN
77140
LICENSED
PROFESSIONAL ENGINEER

4/25/19

ENGINEER:

DGA
Consulting Engineers
Post Office Box 852697
Mesquite, Texas 75185
Phone: (214) 356-0797
www.dgaengineers.com
Texas Registered
Engineering Firm
F-12706

CONSULTANT:

OWNER'S REPRESENTATIVE:
MOFFETT CONSTRUCTION
c/o BRANDON MOFFETT
1535 AMERICAN WAY
CEDAR HILL, TEXAS 76001
(682) 323-7700

AT&T BUILDING REMODEL
STRUCTURAL RENOVATION
3020 BROADWAY STREET
SAN ANTONIO, TEXAS 78215

REVISIONS:

NO.	DATE	ISSUE:

DGA Project Number: DGA-S-1925
Date: APRIL 25, 2019

Sheet Title
ROOF
FRAMING PLAN
Sheet Number
S21 of 22

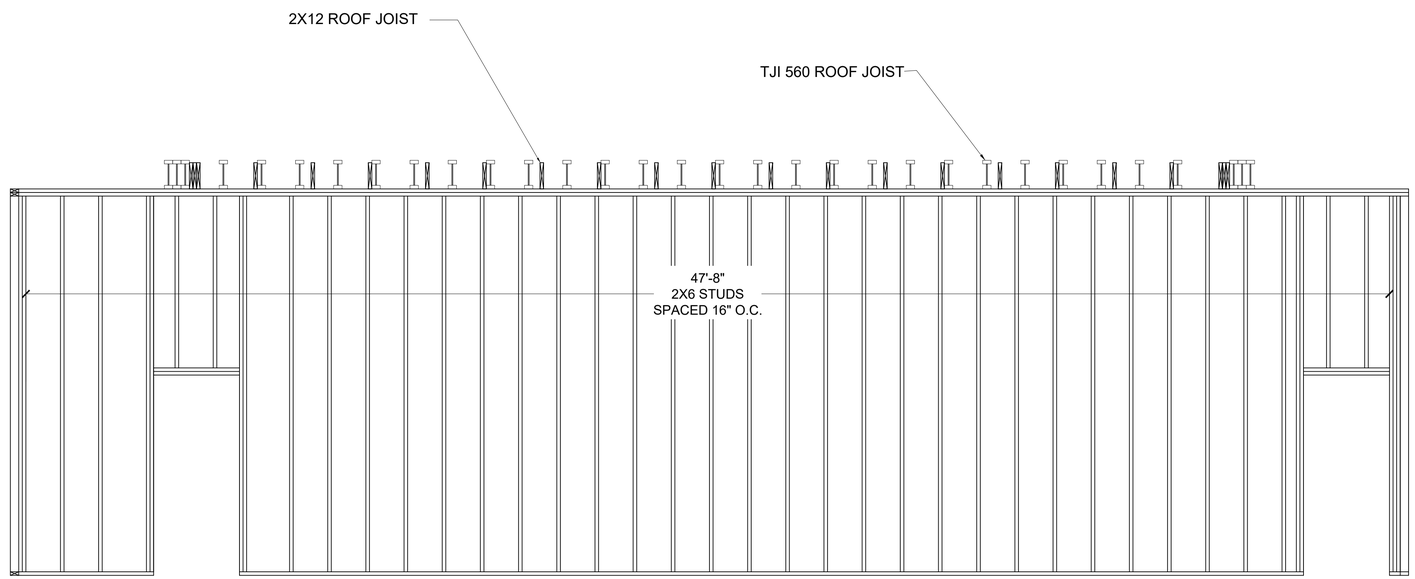

SECTION 12

INTERIOR WALL FRAMING

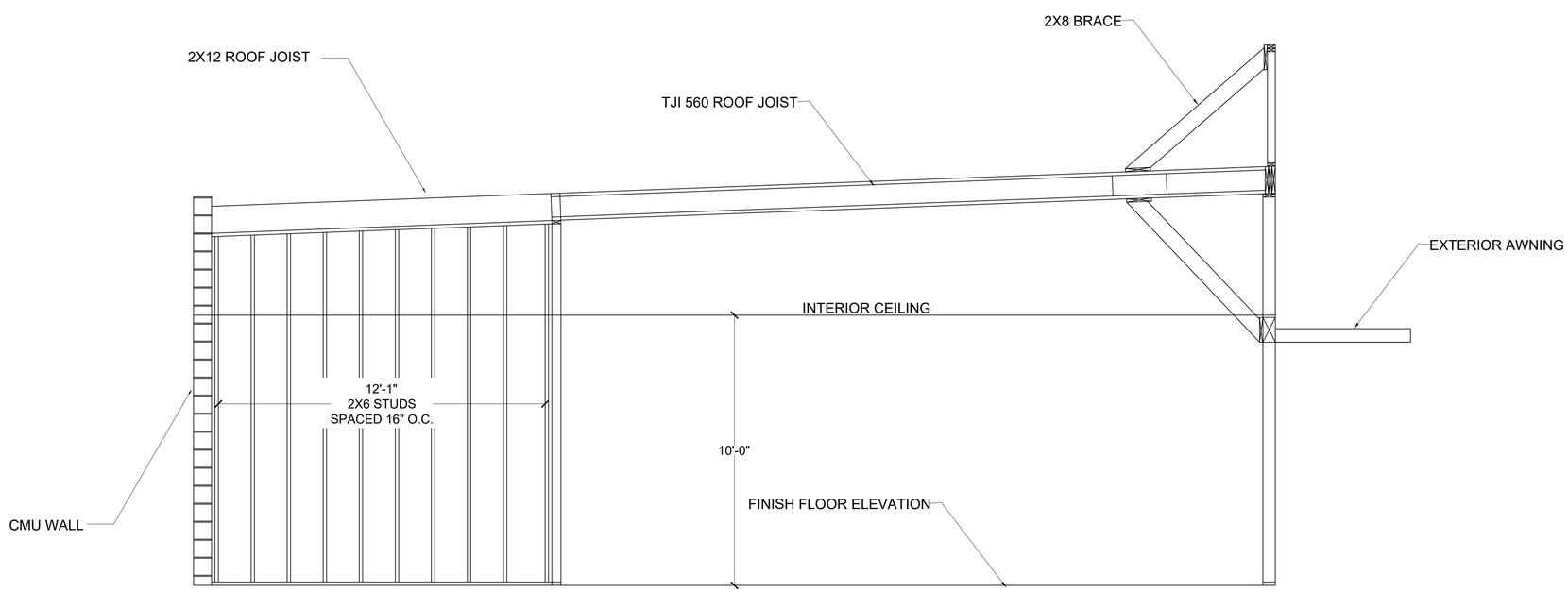

SECTION 7

INTERIOR WALL FRAMING

STATE OF TEXAS
DONAL R GREEN
77140
LICENSED PROFESSIONAL ENGINEER
4/25/19

ENGINEER:

DGA
Consulting Engineers
Post Office Box 852697
Mesquite, Texas 75185
Phone: (214) 356-0797
www.dgaengineers.com
Texas Registered
Engineering Firm
F-12706

CONSULTANT:

OWNER'S REPRESENTATIVE:
MOFFETT CONSTRUCTION
c/o BRANDON MOFFETT
1535 AMERICAN WAY
CEDAR HILL, TEXAS 76001
(682) 323-7700

AT&T BUILDING REMODEL
STRUCTURAL RENOVATION
3020 BROADWAY STREET
SAN ANTONIO, TEXAS 78215

REVISIONS:

NO.	DATE	ISSUE:

DGA Project Number: DGA-S-1925
Date: APRIL 25, 2019

Sheet Title
INTERIOR WALL FRAMING

Sheet Number
S22 of 22