HISTORIC AND DESIGN REVIEW COMMISSION

August 05, 2020

HDRC CASE NO:	**2020-220**
ADDRESS:	619 DAWSON ST
LEGAL DESCRIPTION:	NCB 561 BLK 1 LOT E 12.52 FT OF 11 & W 37.48 FT OF 12
ZONING:	R-6, H
CITY COUNCIL DIST.:	2
DISTRICT:	Dignowity Hill Historic District
APPLICANT:	Anahita Moshgbar Bakhshayeshi/Moshgbar Anahita
OWNER:	DELONG GREGORY & DELONG MONA
TYPE OF WORK:	Construction of a 1.5 story residential structure
APPLICATION RECEIVED:	July, 20, 2020
60-DAY REVIEW:	Not applicable due to City Council Emergency Orders
CASE MANAGER:	Edward Hall

REQUEST:

The applicant is requesting a Certificate of Appropriateness for approval to construct a 1.5 story, single family residential structure on the vacant lot at 619 Dawson Street, located within the Dignowity Hill Historic District.

APPLICABLE CITATIONS:

Historic Design Guidelines, Chapter 4, Guidelines for New Construction

1. Building and Entrance Orientation

A. FAÇADE ORIENTATION
i. Setbacks—Align front facades of new buildings with front facades of adjacent buildings where a consistent setback has
been established along the street frontage. Use the median setback of buildings along the street frontage where a variety of
setbacks exist. Refer to UDC Article 3, Division 2. Base Zoning Districts for applicable setback requirements.
ii. Orientation—Orient the front façade of new buildings to be consistent with the predominant orientation of historic buildings along the street frontage.
B. ENTRANCES
i. Orientation—Orient primary building entrances, porches, and landings to be consistent with those historically found along the street frontage. Typically, historic building entrances are oriented towards the primary street.

2. Building Massing and Form

A. SCALE AND MASS
i. Similar height and scale—Design new construction so that its height and overall scale are consistent with nearby historic buildings. In residential districts, the height and scale of new construction should not exceed that of the majority of historic buildings by more than one-story. In commercial districts, building height shall conform to the established pattern. If there is no more than a 50% variation in the scale of buildings on the adjacent block faces, then the height of the new building shall not exceed the tallest building on the adjacent block face by more than 10%.
ii. Transitions—Utilize step-downs in building height , wall-plane offsets, and other variations in building massing to provide a visual transition when the height of new construction exceeds that of adjacent historic buildings by more than one-half story.
iii. Foundation and floor heights—Align foundation and floor-to-floor heights (including porches and balconies) within one foot of floor-to-floor heights on adjacent historic structures.

B. ROOF FORM

i. Similar roof forms—Incorporate roof forms—pitch, overhangs, and orientation—that are consistent with those predominantly found on the block. Roof forms on residential building types are typically sloped, while roof forms on nonresidential
building types are more typically flat and screened by an ornamental parapet wall.
ii. Façade configuration—The primary façade of new commercial buildings should be in keeping with established patterns. Maintaining horizontal elements within adjacent cap, middle, and base precedents will establish a consistent street wall through the alignment of horizontal parts. Avoid blank walls, particularly on elevations visible from the street.
No new façade should exceed 40 linear feet without being penetrated by windows, entryways, or other defined bays.

D. LOT COVERAGE
i. Building to lot ratio—New construction should be consistent with adjacent historic buildings in terms of the building to
lot ratio. Limit the building footprint for new construction to no more than 50 percent of the total lot area, unless adjacent
historic buildings establish a precedent with a greater building to lot ratio.

3. Materials and Textures

A. NEW MATERIALS
i. *Complementary materials*—Use materials that complement the type, color, and texture of materials traditionally found
in the district. Materials should not be so dissimilar as to distract from the historic interpretation of the district. For example, corrugated metal siding would not be appropriate for a new structure in a district comprised of homes with wood
siding.
ii. Alternative use of traditional materials—Consider using traditional materials, such as wood siding, in a new way to provide visual interest in new construction while still ensuring compatibility.
iii. Roof materials—Select roof materials that are similar in terms of form, color, and texture to traditionally used in the district.
iv. Metal roofs—Construct new metal roofs in a similar fashion as historic metal roofs. Refer to the Guidelines for Alterations and Maintenance section for additional specifications regarding metal roofs.
v. Imitation or synthetic materials—Do not use vinyl siding, plastic, or corrugated metal sheeting. Contemporary materials not traditionally used in the district, such as brick or simulated stone veneer and Hardie Board or other fiberboard siding, may be appropriate for new construction in some locations as long as new materials are visually similar
to the traditional material in dimension, finish, and texture. EIFS is not recommended as a substitute for actual stucco.

4. Architectural Details

A. GENERAL
i. Historic context—Design new buildings to reflect their time while respecting the historic context. While new construction should not attempt to mirror or replicate historic features, new structures should not be so dissimilar as to distract from or diminish the historic interpretation of the district.
ii. Architectural details—Incorporate architectural details that are in keeping with the predominant architectural style along the block face or within the district when one exists. Details should be simple in design and should complement, but
not visually compete with, the character of the adjacent historic structures or other historic structures within the district. Architectural details that are more ornate or elaborate than those found within the district are inappropriate.
iii. Contemporary interpretations—Consider integrating contemporary interpretations of traditional designs and details for
new construction. Use of contemporary window moldings and door surroundings, for example, can provide visual interest

while helping to convey the fact that the structure is new. Modern materials should be implemented in a way that does not
distract from the historic structure.

5. Garages and Outbuildings

A. DESIGN AND CHARACTER
v. Garage doors—Incorporate garage doors with similar proportions and materials as those traditionally found in the district.

6. Mechanical Equipment and Roof Appurtenances

A. LOCATION AND SITING
i. Visibility—Do not locate utility boxes, air conditioners, rooftop mechanical equipment, skylights, satellite dishes, and other roof appurtenances on primary facades, front-facing roof slopes, in front yards, or in other locations that are clearly
visible from the public right-of-way.
ii. Service Areas—Locate service areas towards the rear of the site to minimize visibility from the public right-of-way.

B. SCREENING
i. Building-mounted equipment—Paint devices mounted on secondary facades and other exposed hardware, frames, and piping to match the color scheme of the primary structure or screen them with landscaping.
ii. Freestanding equipment—Screen service areas, air conditioning units, and other mechanical equipment from public view using a fence, hedge, or other enclosure.
iii. Roof-mounted equipment—Screen and set back devices mounted on the roof to avoid view from public right-of-way.
Historic Design Guidelines, Chapter 5, Guidelines for Site Elements

Historic Design Guidelines, Chapter 5, Guidelines for Site Elements

B. NEW FENCES AND WALLS
i. Design—New fences and walls should appear similar to those used historically within the district in terms of their scale,
transparency, and character. Design of fence should respond to the design and materials of the house or main structure.
ii. Location—Avoid installing a fence or wall in a location where one did not historically exist, particularly within the front yard. The appropriateness of a front yard fence or wall is dependent on conditions within a specific historic district.
New front yard fences or wall should not be introduced within historic districts that have not historically had them.
iii. Height—Limit the height of new fences and walls within the front yard to a maximum of four feet. The appropriateness of a front yard fence is dependent on conditions within a specific historic district. New front yard fences should not be introduced within historic districts that have not historically had them. If a taller fence or wall existed historically, additional height may be considered. The height of a new retaining wall should not exceed the height of the slope it retains.
iv. Prohibited materials—Do not use exposed concrete masonry units (CMU), Keystone or similar interlocking retaining
wall systems, concrete block, vinyl fencing, or chain link fencing.
v. Appropriate materials—Construct new fences or walls of materials similar to fence materials historically used in the district. Select materials that are similar in scale, texture, color, and form as those historically used in the district, and that
are compatible with the main structure. Screening incompatible uses—Review alternative fence heights and materials for
appropriateness where residential properties are adjacent to commercial or other potentially incompatible uses.

3. Landscape Design

A. PLANTINGS

i. Historic Gardens— Maintain front yard gardens when appropriate within a specific historic district.

ii. Historic Lawns—Do not fully remove and replace traditional lawn areas with impervious hardscape. Limit the removal of lawn areas to mulched planting beds or pervious hardscapes in locations where they would historically be found, such as along fences, walkways, or drives. Low-growing plantings should be used in historic lawn areas; invasive or large-scale species should be avoided. Historic lawn areas should never be reduced by more than 50%.

iii. Native xeric plant materials—Select native and/or xeric plants that thrive in local conditions and reduce watering usage. See UDC Appendix E: San Antonio Recommended Plant List—All Suited to Xeriscape Planting Methods, for a list of appropriate materials and planting methods. Select plant materials with a similar character, growth habit, and light requirements as those being replaced.

iv. Plant palettes—If a varied plant palette is used, incorporate species of taller heights, such informal elements should be restrained to small areas of the front yard or to the rear or side yard so as not to obstruct views of or otherwise distract from the historic structure.

v. Maintenance—Maintain existing landscape features. Do not introduce landscape elements that will obscure the historic structure or are located as to retain moisture on walls or foundations (e.g., dense foundation plantings or vines) or as to cause damage.

B. ROCKS OR HARDSCAPE

i. Impervious surfaces —Do not introduce large pavers, asphalt, or other impervious surfaces where they were not historically located.

ii. Pervious and semi-pervious surfaces—New pervious hardscapes should be limited to areas that are not highly visible, and should not be used as wholesale replacement for plantings. If used, small plantings should be incorporated into the design.

iii. Rock mulch and gravel - Do not use rock mulch or gravel as a wholesale replacement for lawn area. If used, plantings should be incorporated into the design.

D. TREES

i. Preservation—Preserve and protect from damage existing mature trees and heritage trees. See UDC Section 35-523 (Tree Preservation) for specific requirements.

ii. New Trees – Select new trees based on site conditions. Avoid planting new trees in locations that could potentially cause damage to a historic structure or other historic elements. Species selection and planting procedure should be done in accordance with guidance from the City Arborist.

5. Sidewalks, Walkways, Driveways, and Curbing

A. SIDEWALKS AND WALKWAYS

i. Maintenance—Repair minor cracking, settling, or jamming along sidewalks to prevent uneven surfaces. Retain and repair historic sidewalk and walkway paving materials—often brick or concrete—in place.

ii. Replacement materials—Replace those portions of sidewalks or walkways that are deteriorated beyond repair. Every effort should be made to match existing sidewalk color and material.

iii. Width and alignment—Follow the historic alignment, configuration, and width of sidewalks and walkways. Alter the historic width or alignment only where absolutely necessary to accommodate the preservation of a significant tree.

iv. Stamped concrete—Preserve stamped street names, business insignias, or other historic elements of sidewalks and walkways when replacement is necessary.

v. ADA compliance—Limit removal of historic sidewalk materials to the immediate intersection when ramps are added to
address ADA requirements.

B. DRIVEWAYS
i. Driveway configuration—Retain and repair in place historic driveway configurations, such as ribbon drives. Incorporate
a similar driveway configuration—materials, width, and design—to that historically found on the site. Historic driveways
are typically no wider than 10 feet. Pervious paving surfaces may be considered where replacement is necessary to increase stormwater infiltration.
ii. Curb cuts and ramps—Maintain the width and configuration of original curb cuts when replacing historic driveways. Avoid introducing new curb cuts where not historically found.

7. Off-Street Parking

A. LOCATION
i. Preferred location—Place parking areas for non-residential and mixed-use structures at the rear of the site, behind primary structures to hide them from the public right-of-way. On corner lots, place parking areas behind the primary structure and set them back as far as possible from the side streets. Parking areas to the side of the primary structure are acceptable when location behind the structure is not feasible. See UDC Section 35-310 for district-specific standards.
ii. Front—Do not add off-street parking areas within the front yard setback as to not disrupt the continuity of the streetscape.
iii. Access—Design off-street parking areas to be accessed from alleys or secondary streets rather than from principal streets whenever possible.

B. DESIGN
i. Screening—Screen off-street parking areas with a landscape buffer, wall, or ornamental fence two to four feet high—or
a combination of these methods. Landscape buffers are preferred due to their ability to absorb carbon dioxide. See UDC Section 35-510 for buffer requirements.
ii. Materials—Use permeable parking surfaces when possible to reduce run-off and flooding. See UDC Section 35-526(j)
for specific standards.
iii. Parking structures—Design new parking structures to be similar in scale, materials, and rhythm of the surrounding historic district when new parking structures are necessary.

Standard Specifications for Windows in Additions and New Construction

Consistent with the Historic Design Guidelines, the following recommendations are made for windows to be used in new construction:

- GENERAL: Windows used in new construction should be similar in appearance to those commonly found within the district in terms of size, profile, and configuration. While no material is expressly prohibited by the Historic Design Guidelines, a high quality wood or aluminum-clad wood window product often meets the Guidelines with the stipulations listed below.
- SIZE: Windows should feature traditional dimensions and proportions as found within the district.
- SASH: Meeting rails must be no taller than 1.25”. Stiles must be no wider than 2.25”. Top and bottom sashes must be equal in size unless otherwise approved.
- DEPTH: There should be a minimum of 2” in depth between the front face of the window trim and the front face of the top window sash. This must be accomplished by recessing the window sufficiently within the opening or with the installation of additional window trim to add thickness. All windows should be supplied in a block frame and exclude nailing fins which limit the ability to sufficiently recess the windows.
- TRIM: Window trim must feature traditional dimensions and architecturally appropriate casing and sloped sill detail.

- GLAZING: Windows should feature clear glass. Low-e or reflective coatings are not recommended for replacements. The glazing should not feature faux divided lights with an interior grille. If approved to match a historic window configuration, the window should feature true, exterior muntins.
- COLOR: Wood windows should feature a painted finish. If a clad or non-wood product is approved, white or metallic manufacturer's color is not allowed and color selection must be presented to staff.

FINDINGS:

a. The applicant is requesting a Certificate of Appropriateness for approval to construct a 1.5 story, single family residential structure on the vacant lot at 619 Dawson Street, located within the Dignowity Hill Historic District.
b. CONTEXT & DEVELOPMENT PATTERN – The context and historic development pattern of this block of Dawson consists primarily of one-story residential structures; however, this block does feature a two-story historic structure. This block also features two-story infill construction.
c. CONCEPTUAL APPROVAL – The Historic and Design Review Commission issued conceptual approval of the proposed new construction with the following stipulations:
    i. That the design that featured two front porch roofs be developed for final approval.
    ii. That the applicant incorporate a foundation height that is consistent with the Guidelines and those found historically on the block.
    iii. That siding feature an exposure of four inches, a smooth finish, a thickness of approximately ¾" and mitered corners. Additionally, the standing seam metal roof should feature panels that are 18 to 21 inches wide, seams that are 1 to 2 inches in height, a standard galvalume finish, and either a crimped ridge seam or a low profile ridge cap.
    iv. That the applicant incorporate windows that meet staff's standard specifications for windows in new construction.
    v. That the applicant incorporate appropriate porch massing.
d. SETBACKS & ORIENTATION – According to the Guidelines for New Construction, the front facades of new buildings are to align with front facades of adjacent buildings where a consistent setback has been established along the street frontage. Additionally, the orientation of new construction should be consistent with the historic examples found on the block. The applicant has proposed a setback that is less than those of the adjacent historic structures. Staff finds the proposed setback to be inconsistent with the Guidelines. Staff finds that a setback that is equal to or greater than those found historically on the block should be used. At the time of conceptual approval, the Commission noted that the proposed setbacks were appropriate due.
e. ENTRANCES – According to the Guidelines for New Construction 1.B.i., primary building entrances should be oriented towards the primary street. The applicant has proposed a primary entrance toward Dawson. Staff finds the proposed entrance orientation to be consistent with the Guidelines.
f. SCALE & MASS – Per the Guidelines for New Construction 2.A.i., a height and massing similar to historic structures in the vicinity of the proposed new construction should be used. In residential districts, the height and scale of new construction should not exceed that of the majority of historic buildings by more than one-story. As noted in finding b, this block of Dawson primarily features one story structures. The applicant has proposed an overall height of approximately twenty-two (22) feet. Additionally, the applicant has proposed two front facing gables to match similar front façade and porch massing as found historically within the district. Generally, staff finds the overall height of the structure to be appropriate; however, staff finds the proposed porch massing to be inconsistent with porch massing found historically within the district.
g. FOUNDATION & FLOOR HEIGHTS – According to the Guidelines for New Construction 2.A.iii., foundation and floor heights should be aligned within one (1) foot of neighboring structure's foundation and floor heights. Historic structures on this block of Dawson feature foundation height of between two (2) and three (3) feet. The applicant has noted a foundation height of 2 feet. Generally, this is consistent with the Guidelines; however, the foundation height should be shown in elevation. As found on historic houses, the foundation height should read clearly, and foundation skirting should be distinguished from the siding.
h. ROOF FORM – The applicant has proposed for the structure to feature a gabled and hipped roofs. Staff finds that the applicant should incorporate roof massing and profiles that are found historically within the district.
i. LOT COVERAGE – Per the Guidelines, the building footprint for new construction should be no more than fifty (50) percent of the size of the total lot area. The applicant's proposed lot coverage is consistent with the Guidelines.

j. MATERIALS – The applicant has proposed materials that include composite siding, cedar siding, cedar porch decking, a standing seam metal roof, and wood windows. Staff finds that composite siding should feature an exposure of four inches, a smooth finish, a thickness of approximately ¾", and mitered corners. If cedar siding is used, it should be installed in a lapped profile. Regarding the standing seam metal roof, staff finds that panels should feature 18 to 21 inches in width, seams should feature 1 to 2 inches in height, a standard galvalume finish should be used, and either a crimped ridge seam, or a low-profile ridge cap should be installed.
k. WINDOW MATERIALS – As noted in finding i, the applicant has proposed wood windows. The wood window that the applicant has proposed is consistent with staff's specifications for windows in new construction.
l. FENESTRATION PROFILE – The applicant has proposed full height window openings that staff finds to be generally appropriate and consistent in size with those found historically within the district; however, staff finds that additional fenestration should be added to each side elevation, specifically toward the front of the structure.
m. FENESTRATION PROPORTIONS – Staff noted in finding e that the proposed new construction features a massing, form and scale that do not correlate to its proposed height of twenty-eight (28) feet, but should rather correlate to a structure with the height of a traditional one story structure. Staff finds that the proposed mass and form produce fenestration proportions that appear lacking in size and quantity.
n. ARCHITECTURAL DETAILS (Front porch massing) – The applicant has proposed a front porch that is maintained within the overall massing of the historic structure; however, the proposed porch lacks a sense of scale as found historically throughout the district. Historically, porches include porch columns and are not enclosed by louvers.
o. ARCHITECTURAL DETAILS – As noted in the finding above, staff finds that the proposed proportions and massing of the new construction should be modified. Additionally, staff finds that fenestration patterns and porch massing and design should be modified to be consistent with those found historically in the district.
p. DRIVEWAY – The lot currently features a retaining wall, curbcut and driveway. Per the submitted renderings, the applicant has eliminated the front yard driveway and parking location. Staff finds that no front yard parking should exist that results in parking in front of the structure.
q. MECHANICAL EQUIPMENT – The applicant has noted the location and screening of all mechanical equipment.
r. LANDSCAPING – The applicant has included landscaping information in the form of a landscaping plan. Generally, staff finds the proposed landscaping to be appropriate.

RECOMMENDATION:

Staff does not recommend final approval based on findings a through r. Staff recommends that the following items be addressed prior to receiving a recommendation for final approval.

i. That a setback that is equal to or greater than those found historically on the block be used, as noted in finding d.
ii. That the proposed massing feature proportions that are consistent with those found historically within the district, as noted in finding f.
iii. That the proposed foundation height of two (2) feet be read throughout each elevation as it is on the front elevation.
iv. That the applicant incorporate additional fenestration on each side elevation as noted in finding l, and that fenestration be proportionate to the overall façade, as noted in finding m.

A foundation inspection is to be scheduled with OHP staff to ensure that foundation setbacks and heights are consistent with the approved design. The inspection is to occur after the installation of form work and prior to the installation of foundation materials.

A standing seam metal roof inspection is to be schedule with OHP staff to ensure that roofing materials are consistent with approved design. An industrial ridge cap is not to be used.

City of San Antonio One Stop

June 11, 2020

1:1,000

0 0.0075 0.015 0.03 mi

0 0.0125 0.025 0.05 km

City of San Antonio GIS
Copyright 6-11-2020

Nightingale RESIDENCE

619 Dawson st.

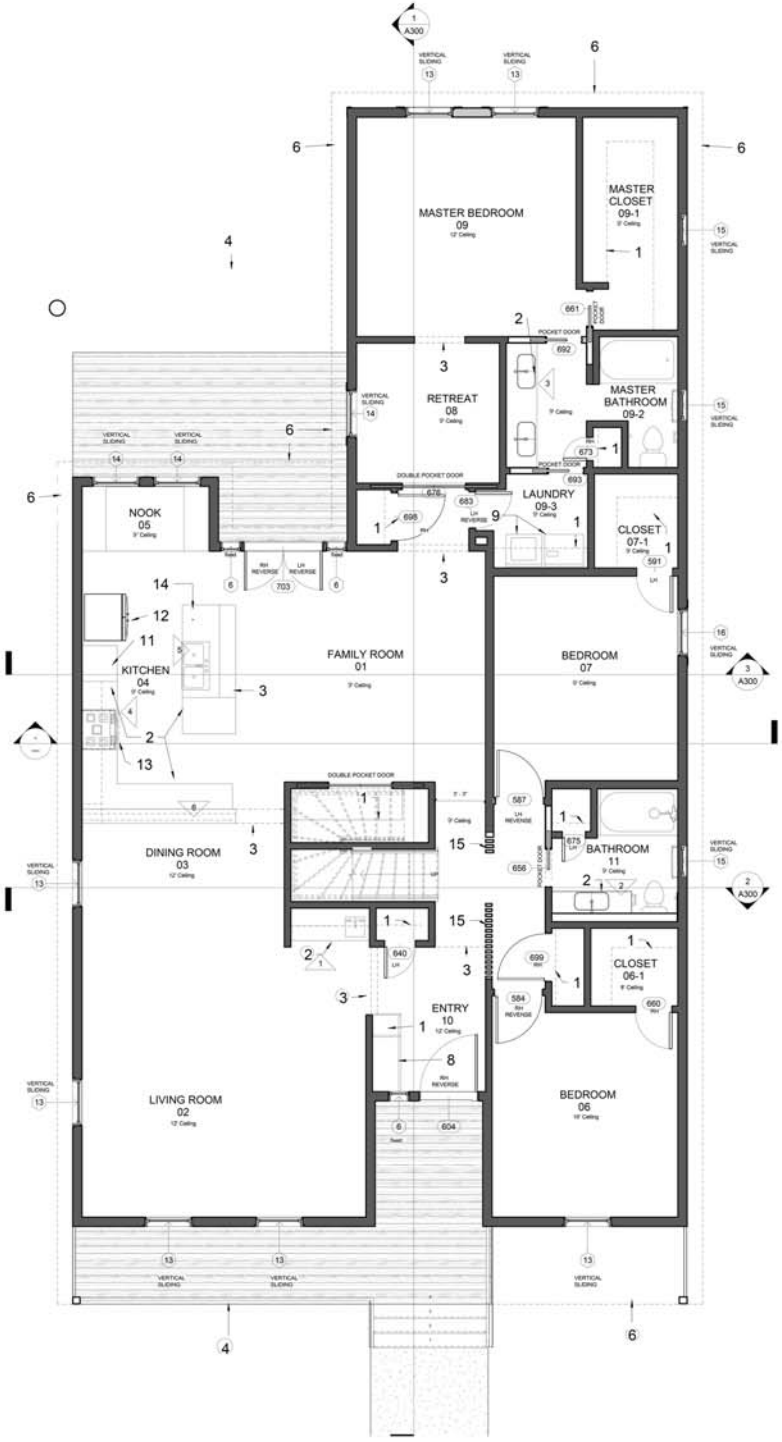

FLOOR PLAN GENERAL NOTES:

1) ALL DIMENSIONS ARE STUD TO STUD UNLESS OTHERWISE NOTED.
CONTRACTOR TO NOTIFY ARCHITECT IF DISCREPANCIES ARE FOUND.

2) AHU AND W/H WILL BE LOCATED IN ATTIC ABOVE THE FIRST FLOOR.

3) CONTRACTOR TO LOCATE AIR SUPPLY CHASES INSIDE THE BEDROOM
CLOSETS 06-1, 07-1 AND 09-1 IF NECESSARY. IF AIR SUPPLY CHASES ARE
REQUIRED, CONTRACTOR WILL ADJUST CLOSET DOOR SIZES TO AN
APPROPRIATE SIZE.

4) ALL INTERIOR DOORS TO BE HOLLOW CORE WOOD CONSTRUCTION,
UNLESS OTHERWISE NOTED.

5) ALL PLUMBING FIXTURES SUCH AS TOILET, SINK, BATH TUB TO BE OWNER
SELECTED AND CONTRACTOR INSTALLED.

FLOOR PLAN LEGEND:

WALL , REFER WALL TYPES

WALL , REFER WALL TYPES

DOOR, REFER FLOOR PLAN AND EXTERIOR ELEVATION GENERAL NOTES

DOOR, REFER FLOOR PLAN AND EXTERIOR ELEVATION GENERAL NOTES

DOOR, REFER FLOOR PLAN AND EXTERIOR ELEVATION GENERAL NOTES

FLOOR PLAN KEYED NOTES:

1) LINE OF SHELVING OR SHELVING ABOVE

2) COUNTERTOP, REFER FINISH SCHEDULE

3) LINE OF STRUCTURE ABOVE

4) FRONT/BACK PORCH

5) LINE OF ROOF BELOW

6) LINE OF ROOF ABOVE

7) ROOF SKYLIGHT

8) BALCONY

9) BENCH

10) WASHER/DRYER

11) WALL HEIGHT CABINET

12) REFRIGERATOR

13) RANGE

14) DISHWASHER

15) WALL PARTITION

16) OPENING TO THE ATTIC SPACE

17) ELECTRIC TANKLESS WATER HEATER

18) A/C UNIT

South

Option #1

ELEVATION KEYED NOTES:

1) ALL DOORS WITH GLAZING WILL REQUIRE TEMPERED GLASS PANELS.

2) ALL EXTERIOR DOORS TO BE HOLLOW METAL CONSTRUCTION UNLESS OTHERWISE NOTED. ALL EXTERIOR DOORS TO BE PAINTED.

North

ELEVATION KEYED NOTES:

1) METAL ROOFING

2) METAL EDGE FLASHING ON 1X2 TREATED WOOD NAILER, PTD

3) CEMENT FIBER BOARD FASCIA (HARDIE), PTD

4) CEMENT FIBER BOARD TRIM (HARDIE), PTD

5) VINYL WINDOW, DOUBLE GLAZED, REFER GENERAL NOTES FOR LOCATION OF TEMPERED AND ANNEALED WINDOWS

6) HOLLOW METAL DOOR, PTD

7) WOOD STAIRS

8) WOOD DECK

9) WOOD RAILING POST, TOP/BOTTOM RAILS, AND GAURDRAILS, PTD

10) CEMENT FIBER LAP SIDING (HARDIE), PTD

11) WOOD SIDING

12) WOOD MESH

13) VENT

Option #1

East

West

South

Option #2

ELEVATION KEYED NOTES:

1) ALL DOORS WITH GLAZING WILL REQUIRE TEMPERED GLASS PANELS.

2) ALL EXTERIOR DOORS TO BE HOLLOW METAL CONSTRUCTION UNLESS OTHERWISE NOTED. ALL EXTERIOR DOORS TO BE PAINTED.

North

ELEVATION KEYED NOTES:

1) METAL ROOFING

2) METAL EDGE FLASHING ON 1X2 TREATED WOOD NAILER, PTD

3) CEMENT FIBER BOARD FASCIA (HARDIE), PTD

4) CEMENT FIBER BOARD TRIM (HARDIE), PTD

5) VINYL WINDOW, DOUBLE GLAZED, REFER GENERAL NOTES FOR LOCATION OF TEMPERED AND ANNEALED WINDOWS

6) HOLLOW METAL DOOR, PTD

7) WOOD STAIRS

8) WOOD DECK

9) WOOD RAILING POST, TOP/BOTTOM RAILS, AND GAURDRAILS, PTD

10) CEMENT FIBER LAP SIDING (HARDIE), PTD

11) WOOD SIDING

12) WOOD MESH

13) VENT

Option #2

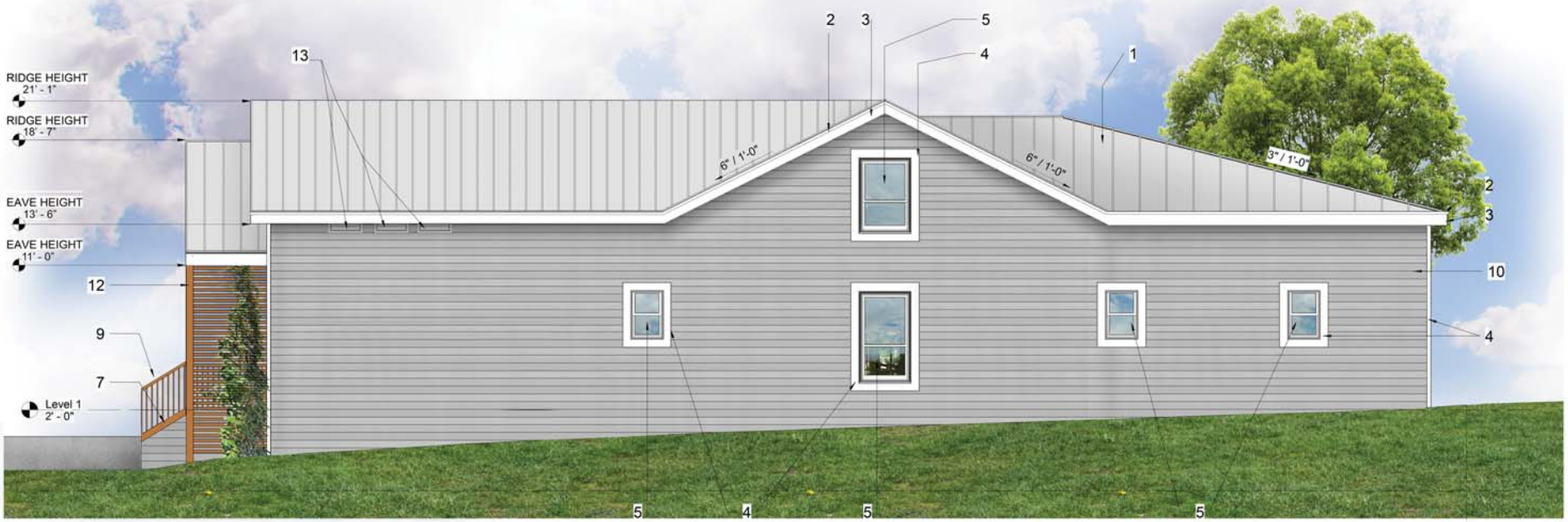

East

West

Option #1

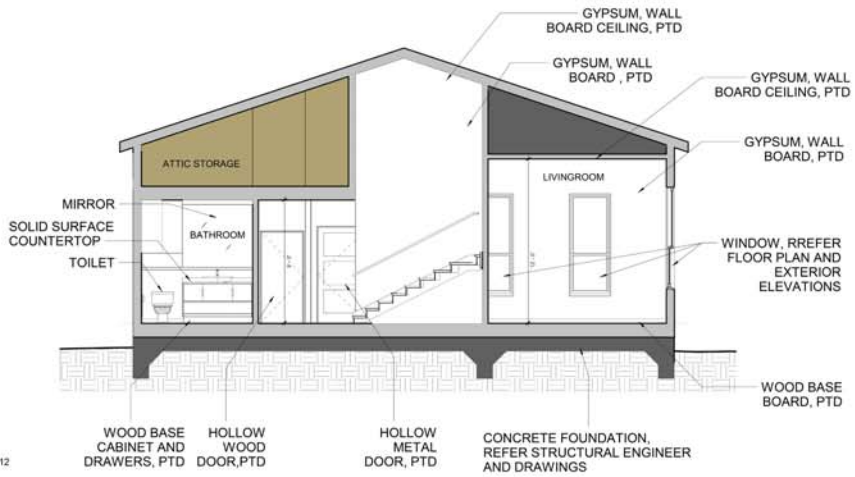

Section 12

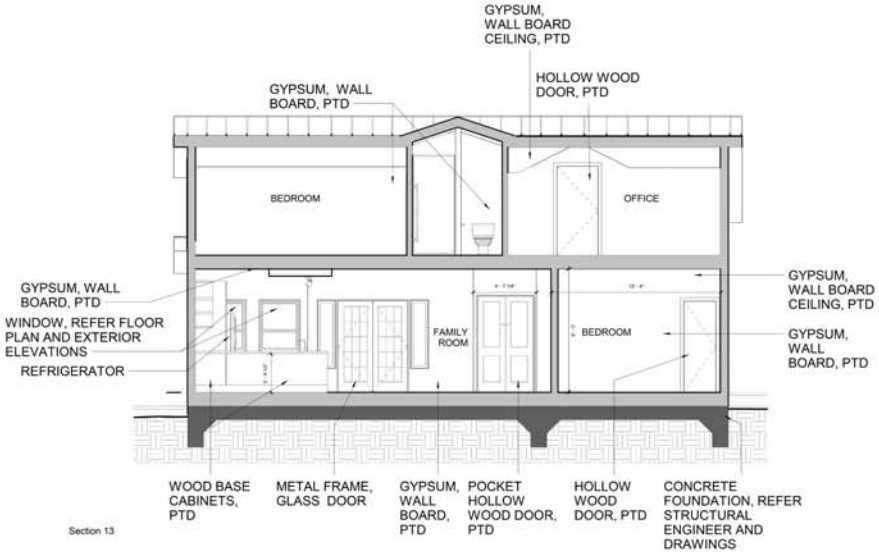

Section 13

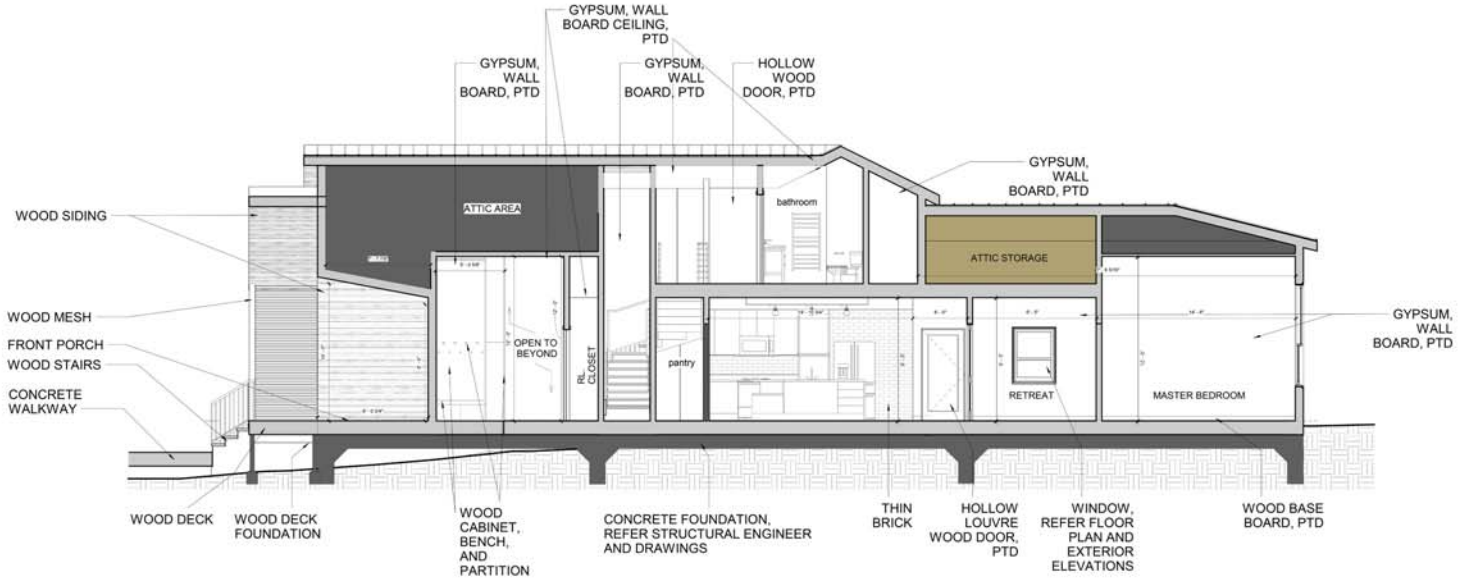

Section 11

Option #2

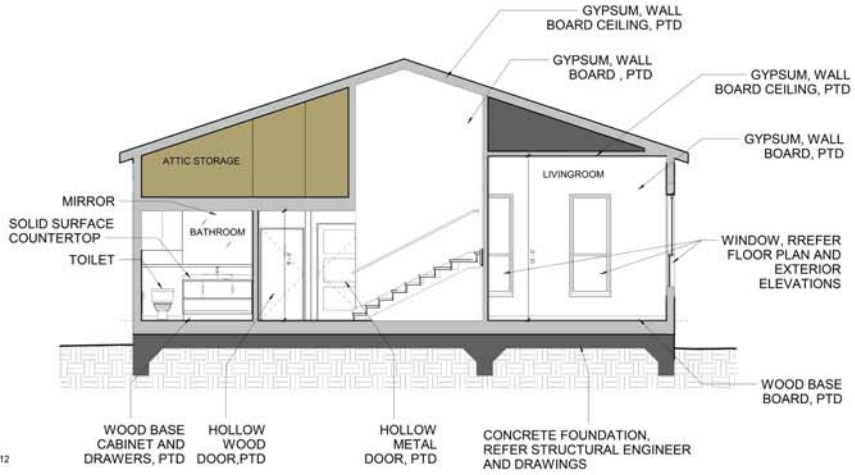

Section 12

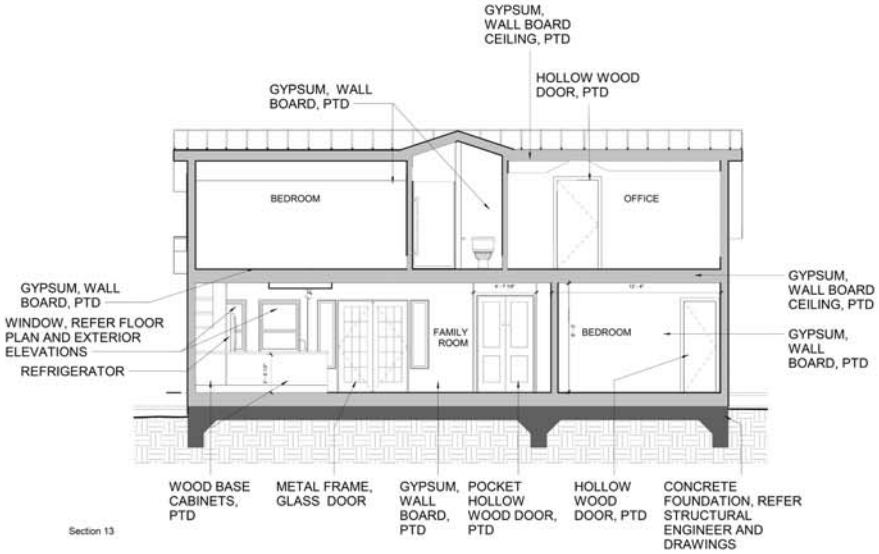

Section 13

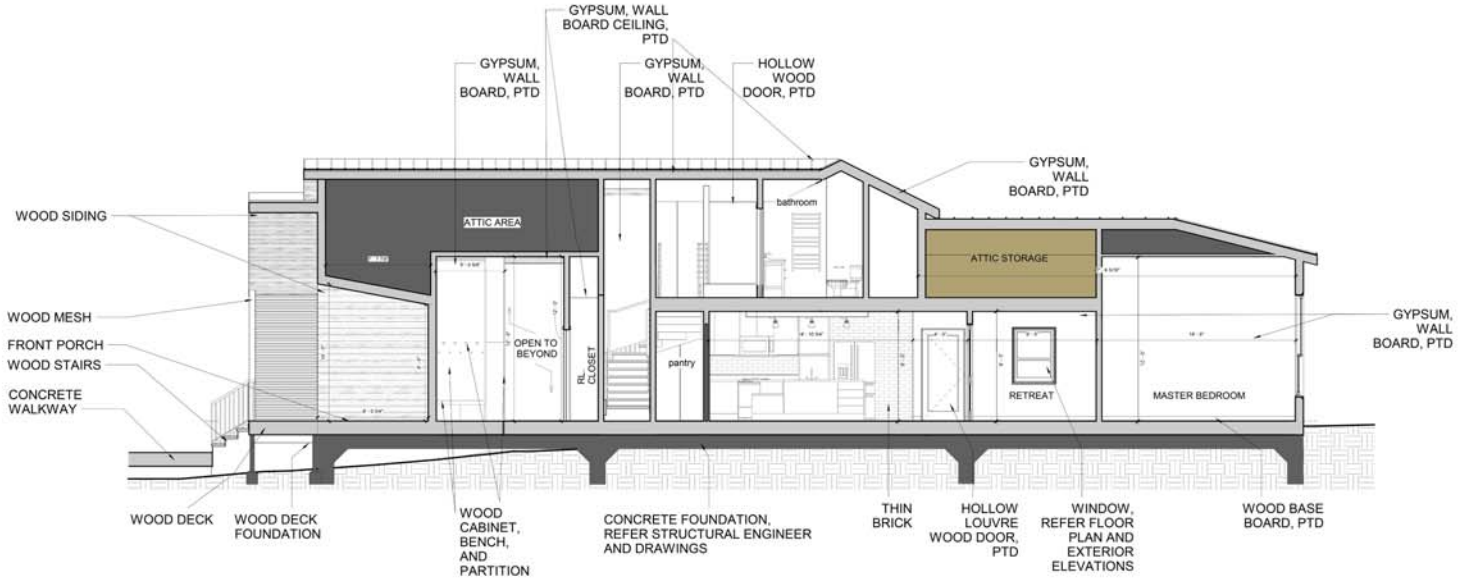

Section 11

View from backyard

View from backyard + notes

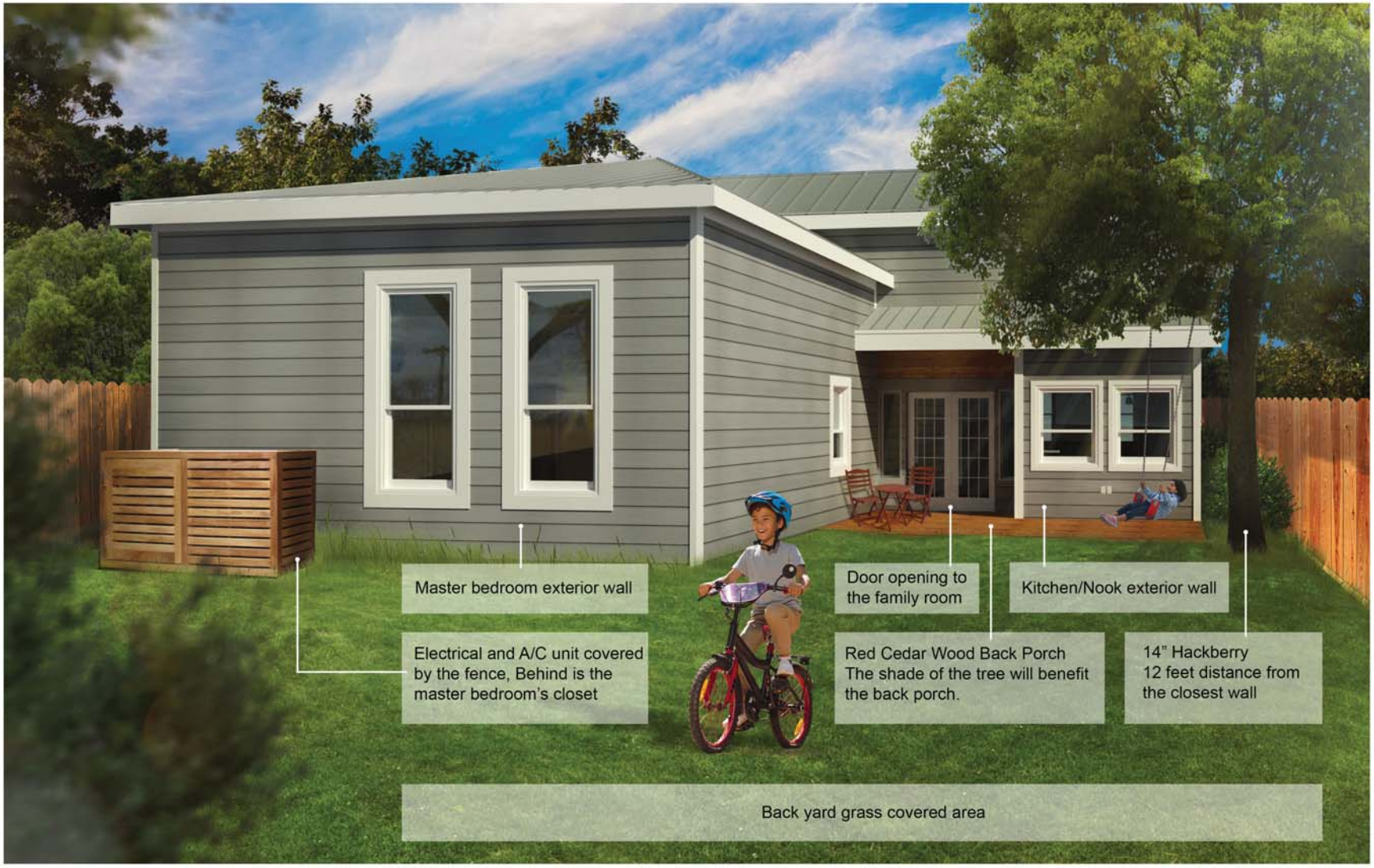

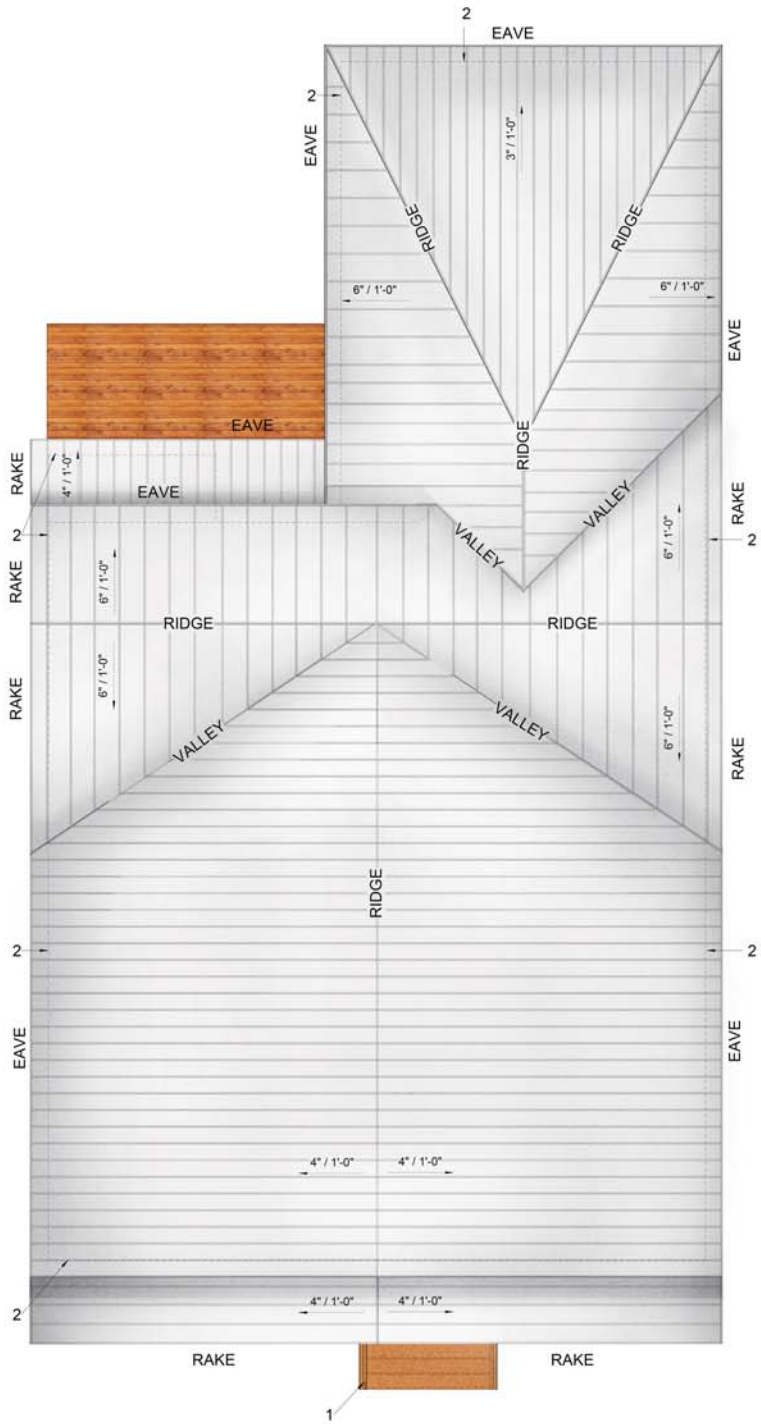

ROOF PLAN LEGEND:

METAL ROOFING

ROOF PLAN KEYED NOTES:

1) STAIRS BELOW

2) LINE OF EXTERIOR WALL BELOW

Site plan and parking situation

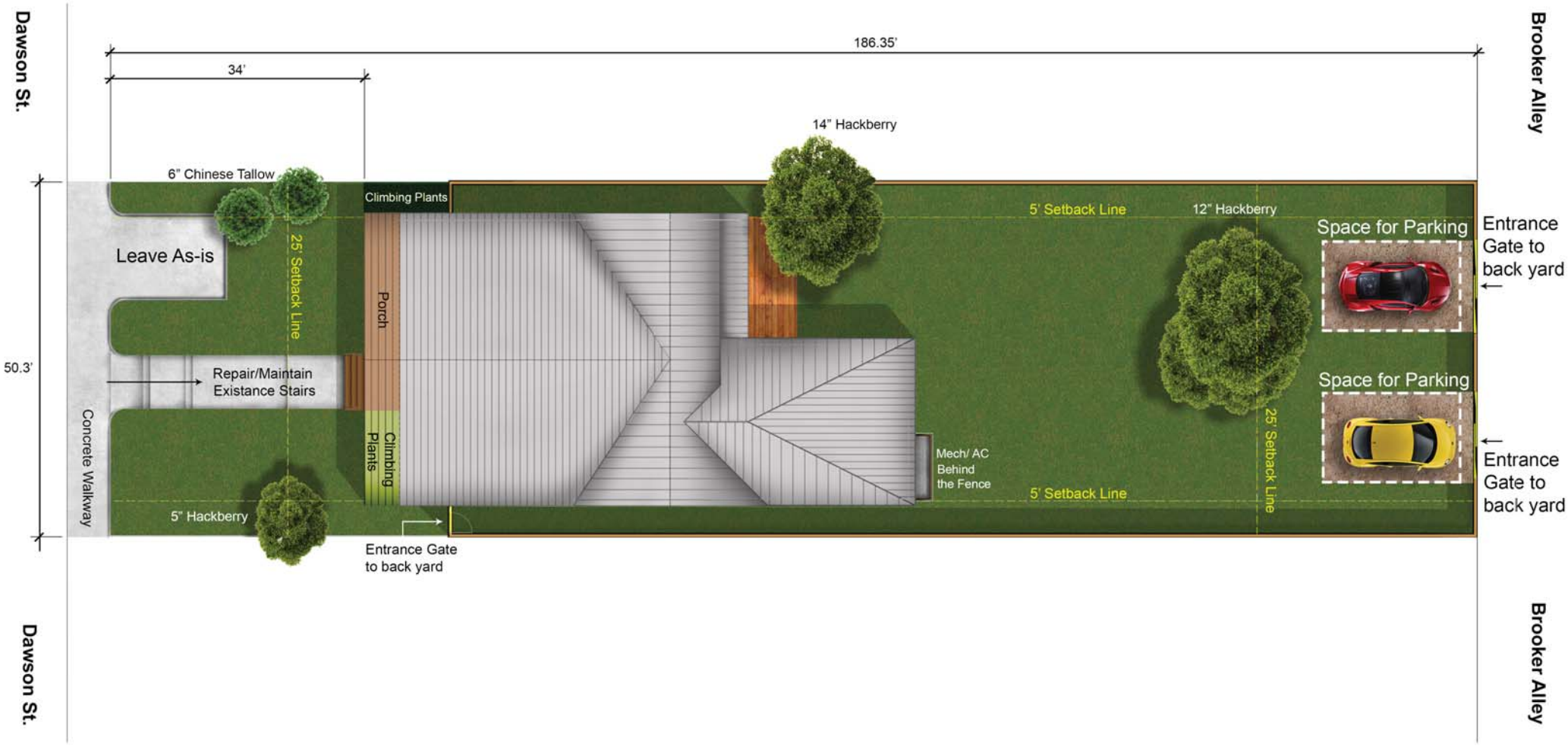

Image from Brooker Alley, Many residents park their cars in the alley.

Brooker Alley

Image from Brooker Alley, At the other side of the lot.

AC unit and Mech/Elect behind the fence. "The Picture is only a visual example"

B. DRIVEWAYS

i. Driveway configuration—Retain and repair in place historic driveway configurations, such as ribbon drives. Incorporate
a similar driveway configuration—materials, width, and design—to that historically found on the site. Historic driveways
are typically no wider than 10 feet. Pervious paving surfaces may be considered where replacement is necessary to increase stormwater infiltration.

ii. Curb cuts and ramps—Maintain the width and configuration of original curb cuts when replacing historic driveways. Avoid introducing new curb cuts where not historically found.

Leave As-Is

Repair/Maintain Existing Stairs

Existing Stairs

Dawson St.

Set back comparison to adjacent houses

615	617	619	625

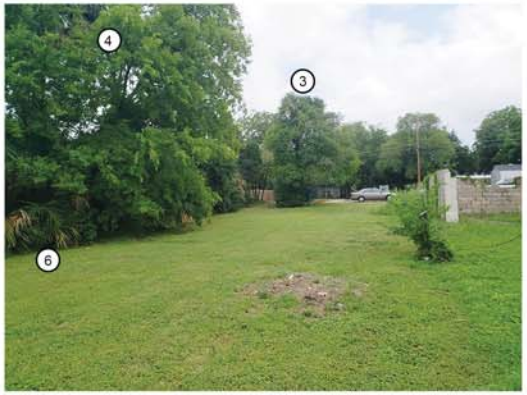

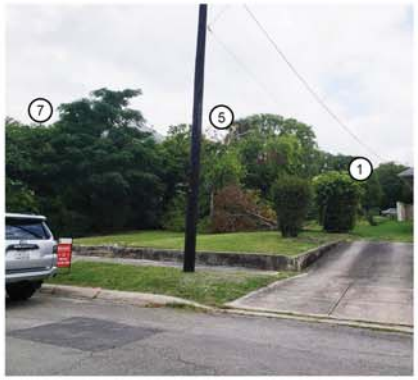

How close to a tree, can new construction be?

Roots typically spread out from two to three times the width of the branches. However, the essential roots are usually considered to be within the dripline, which is the area underneath the tree's branches.

Overal Recommendation:

Tree diameter	Minimum distance
less than 6 inches	dripline of tree
6 to 9 inches	5 feet
10 to 14 inches	10 feet
15 to 19 inches	12 feet
more than 19 inches	15 feet

1	5" HACKBERRY
2	9" HACKBERRY
3	12" HACKBERRY
4	14" HACKBERRY
5	15" HACKBERRY
6	18" PALM
7	6" CHINESE TALLOW

To be Removed To be Preserved

Tree No, 4 , The 14" Hackberry has 12 feet distance from the exterior wall of the House.

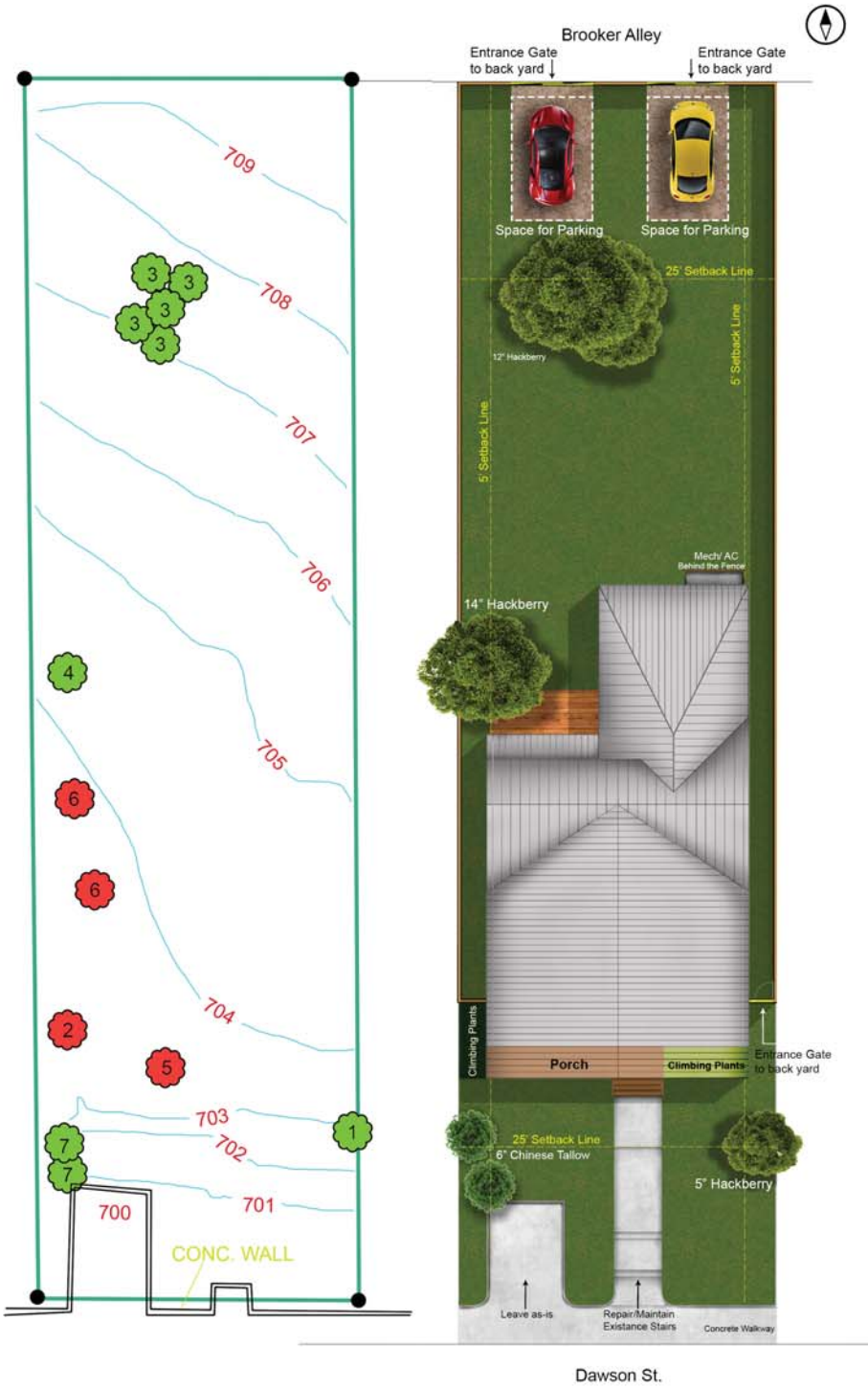

W-2500 Wood
Wood Window
Double-Hung

Architectural Design Manual

September 2019

TABLE OF CONTENTS

Product Information
General Information....2
Lite Cut Information....3
Clear Opening Formulas....4
Grid Options....5
Unit Sizing....6
Trim & Sill Options....7
Jamb Extender & Prep for Stool Options....8
Mullion Options....9

Section Details
Operator:
Standard Sections....10
Pocket Sections....11
Geometric Insash:
Pocket Sections....12
Transom Sections....13

Sizing Details
Min-Max Sizing:
Operator....14
Geometric Insash....15

GENERAL INFORMATION

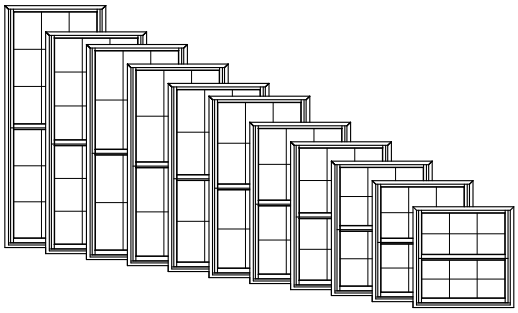

Dimensional Windows

W-2500 Wood Double-Hung windows may be specified as "dimensional" by adjusting the desired rough opening width or height. Siteline Wood Double-Hung windows feature fully operating upper and lower sash which can be tilted or removed for easy cleaning.

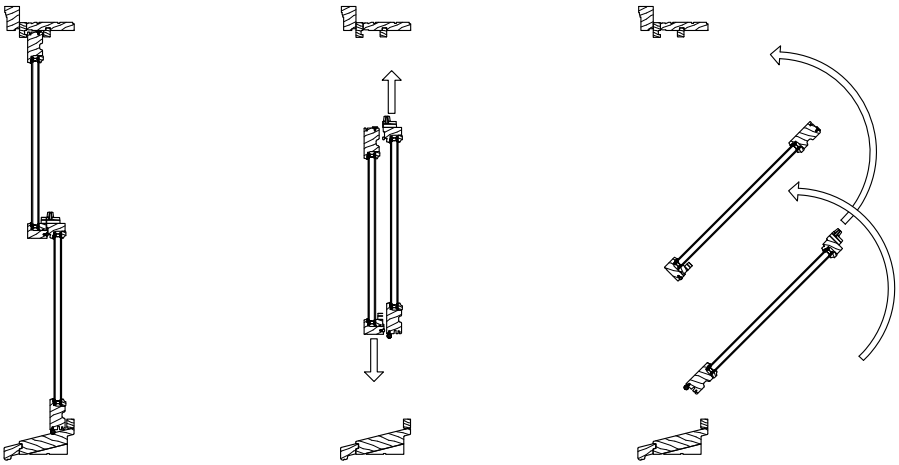

Sash Closed

Upper & Lower Operating Sash

Sash Tilting

Multiple Assemblies

W-2500 Wood Double-Hung windows may be mulled beside other wood double-hung, wood picture windows, or below wood transom windows, to fulfill a wide variety of needs.

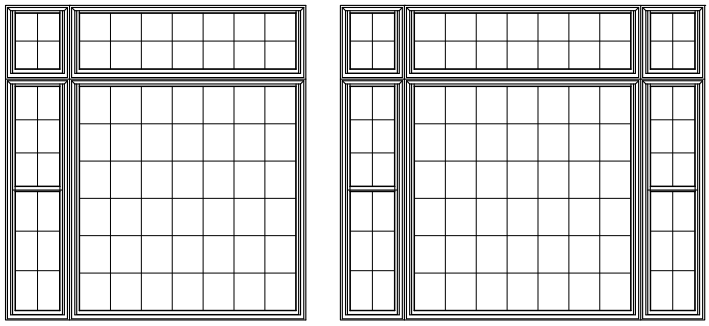

Product specifications may change without notice.
Questions? Consult JELD-WEN customer service.

LITE CUT INFORMATION

Lite Cut Options

W-2500 Wood Double-Hung windows are available with removable Grilles, Grilles Between Glass (GBG), or Simulated Divided Lites (SDL) in various widths and styles. The standard grid patterns are shown below.

Special lite cut patterns can include a wide variety of straight line and radius patterns. Non-standard patterns are subject to factory approval.

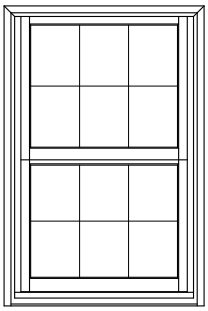

Colonial

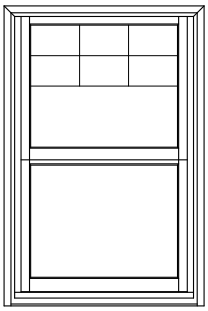

Colonial From Top Down

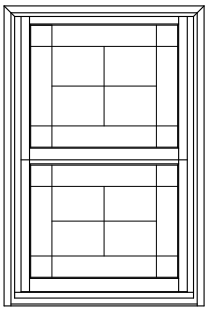

Uneven

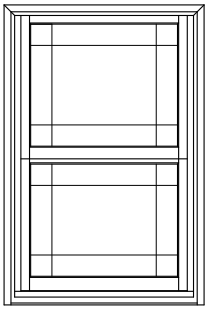

Prairie

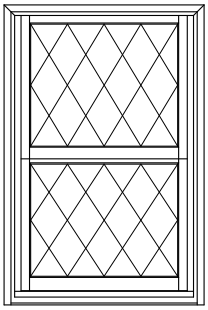

Diamond

Bar Alignment

Alignment of divided lite muntin bars from one window to the next is often required by fine architectural design. Wood grilles, GBG, and SDL's may be specified with muntin bars aligned.

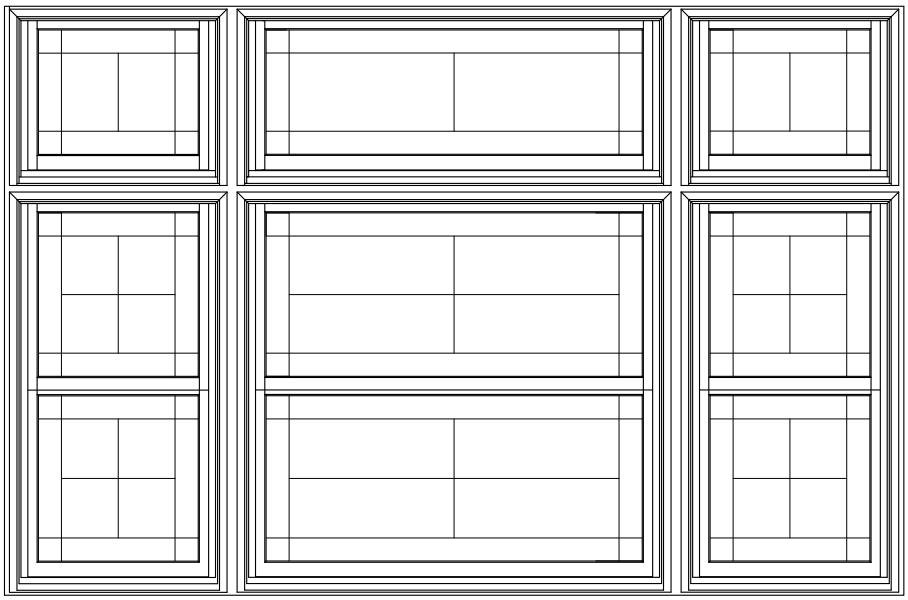

Product specifications may change without notice.
Questions? Consult JELD-WEN customer service.

CLEAR OPENING FORMULAS

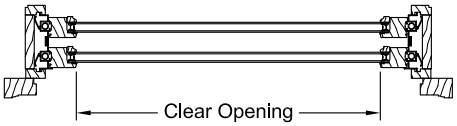

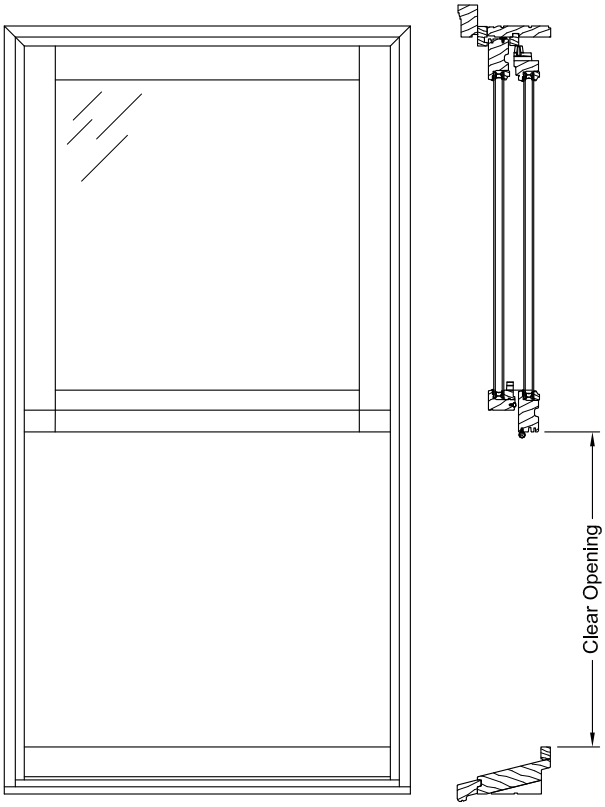

Double-Hung (Even Divide)
Vertical = (Frame Height / 2) - 3 9/16"
Horizontal = Frame Width - 3 3/4"

Product specifications may change without notice.
Questions? Consult JELD-WEN customer service.

GRID OPTIONS

Exterior ← → Interior

SDL Options

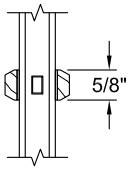

5/8"
Putty

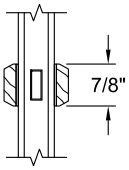

7/8"
Putty

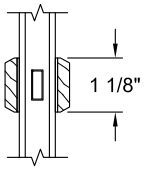

1 1/8"
Putty

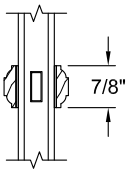

7/8"
Bead

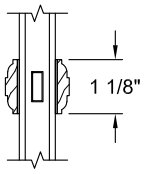

1 1/8"
Bead

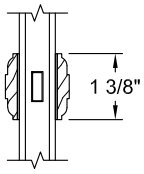

1 3/8"
Bead

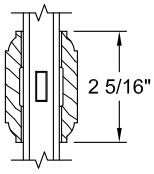

2 5/16"
Bead

Note: Various Combinations of the SDL Bars Shown are Available

GBG Options

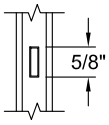

5/8" Flat

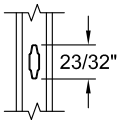

23/32"
Contour

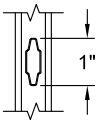

1" Contour

Grille Options

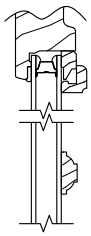

7/8"
Full Surround

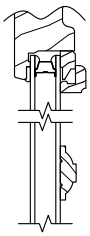

1 1/8"
Full Surround

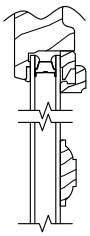

1 3/8"
Full Surround

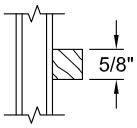

5/8"
Wood Grille

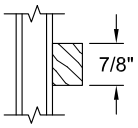

7/8"
Wood Grille

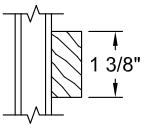

1 3/8"
Wood Grille

Product specifications may change without notice.
Questions? Consult JELD-WEN customer service.

UNIT SIZING

Rough Opening
The frame size of the window plus 3/4".

Masonry Opening
The overall size of the window, including trim, plus 1/2".

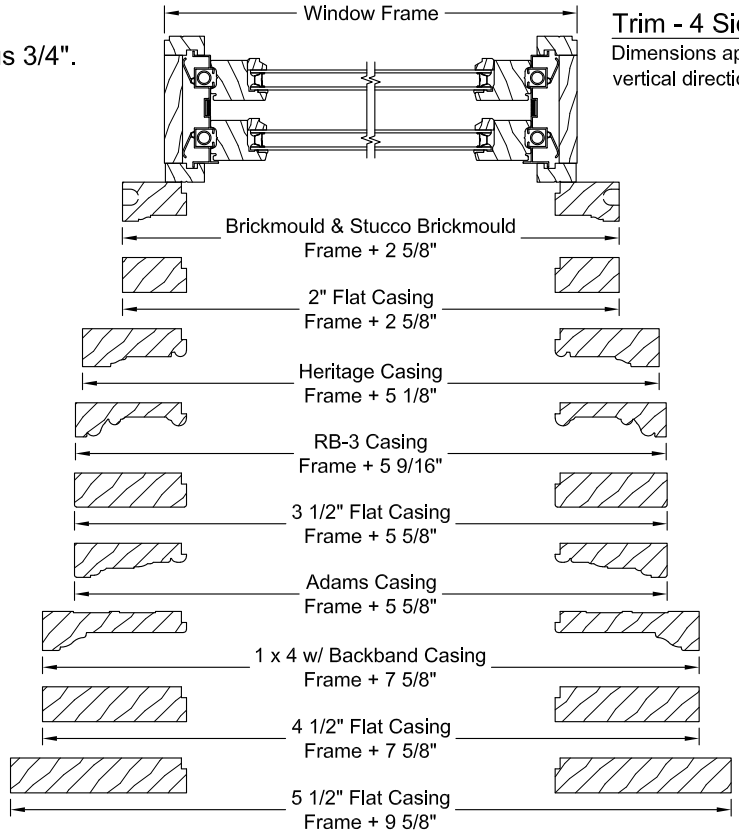

Trim - 4 Sides Of Frame
Dimensions apply to horizontal and vertical directions.

Trim - 3 Sides With Standard Sill Nose
Dimensions apply to vertical direction only.

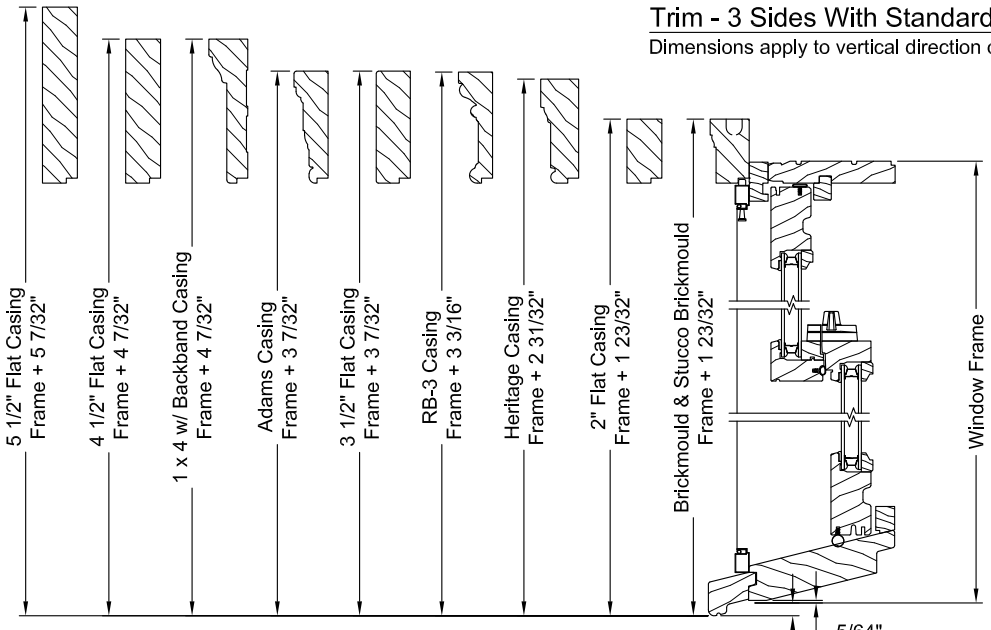

Product specifications may change without notice.
Questions? Consult JELD-WEN customer service.

TRIM & SILL OPTIONS

Trim Options

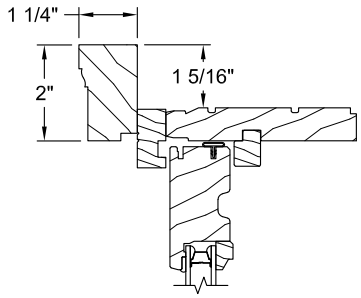

Brickmould

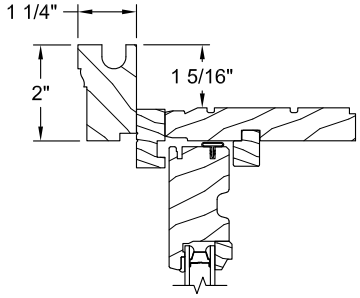

Stucco Brickmould

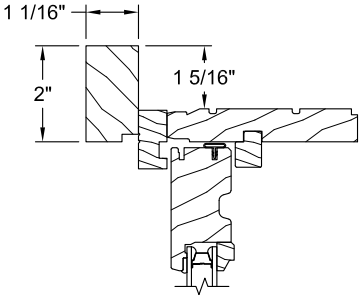

2" Flat Casing

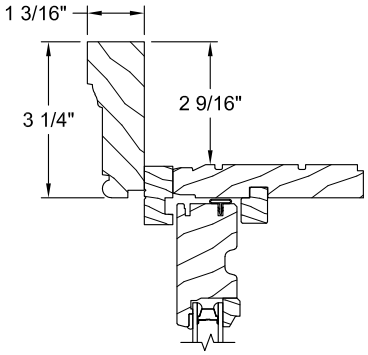

Heritage Casing

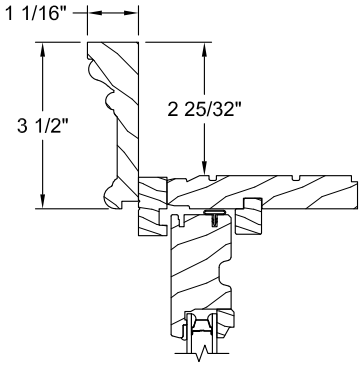

RB-3 Casing

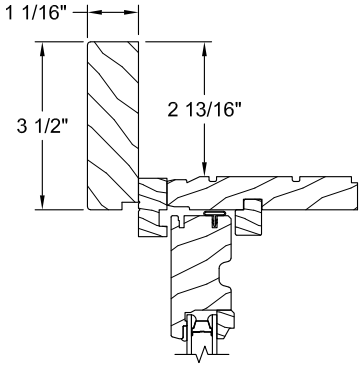

3 1/2" Flat Casing

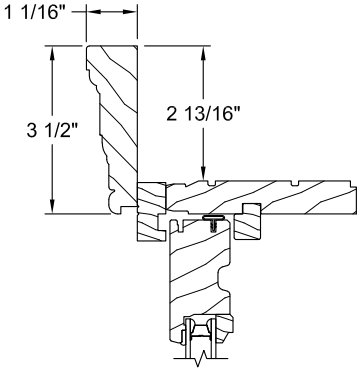

Adams Casing

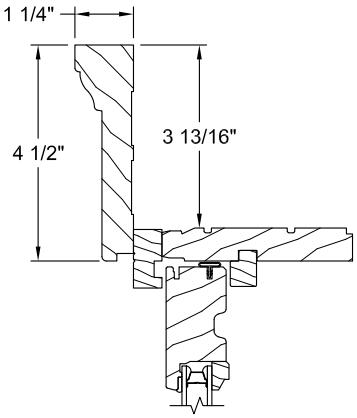

1 x 4 w/ Backband Casing

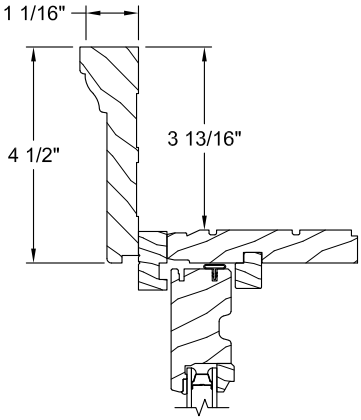

4 1/2" Casing

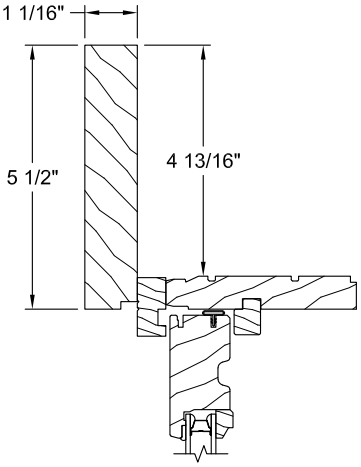

5 1/2" Casing

Sill Options

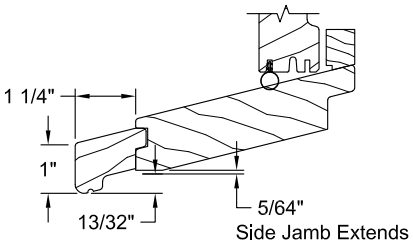

Standard
Sill Nose

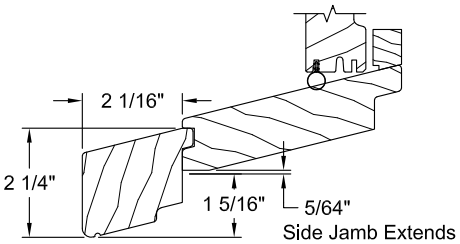

2" Sill Nose

Product specifications may change without notice.
Questions? Consult JELD-WEN customer service.

Scale: 3" = 1' - 0"

JAMB EXTENDER & PREP FOR STOOL OPTIONS

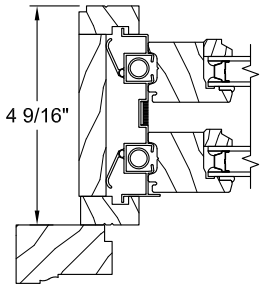

4 9/16" Jamb Width

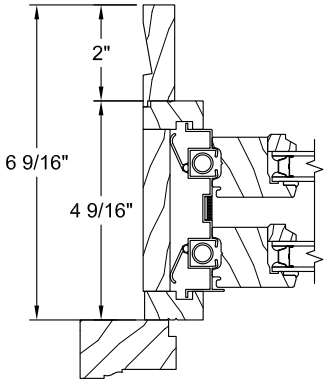

6 9/16" Jamb Width

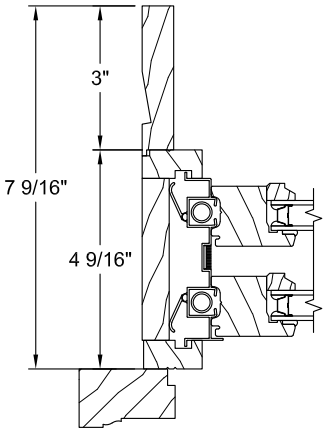

7 9/16" Jamb Width

Return Kerf:
Generally located from first visible interior frame line. Kerfed option available on all jamb extender sizes.

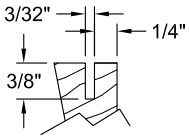

4/4 Jamb Typ.

Prep for Stool

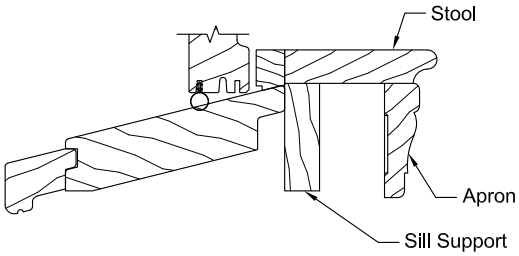

Note: Stool, apron, and sill support are applied by trim carpenter after window is installed and are not provided by JELD-WEN. Unit is shipped without sill jamb extenders.

Product specifications may change without notice.
Questions? Consult JELD-WEN customer service.

MULLION OPTIONS

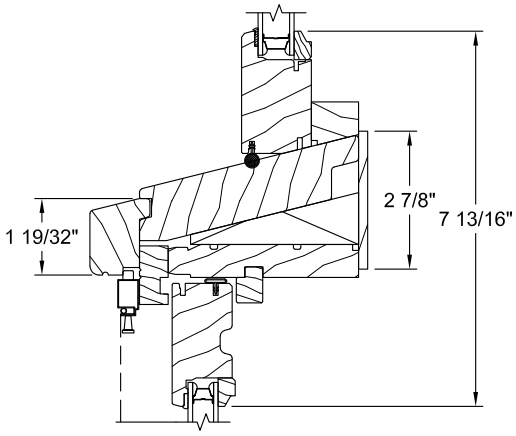

Geometric Insash Transom
Operator

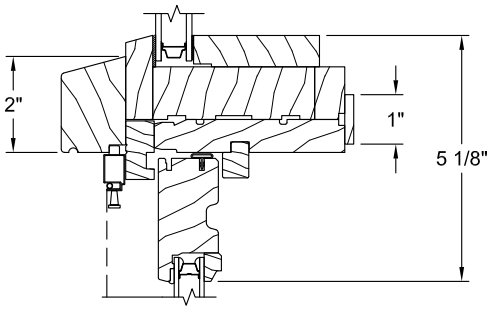

Geometric Direct Set
Operator

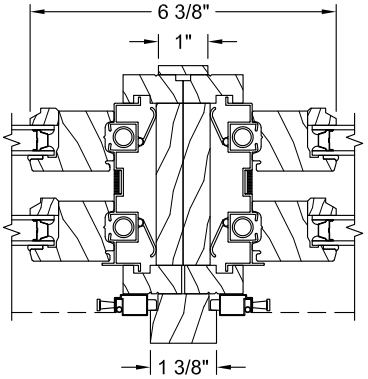

Operator / Operator

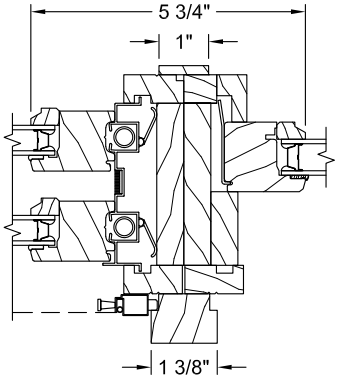

Operator / Geometric Insash

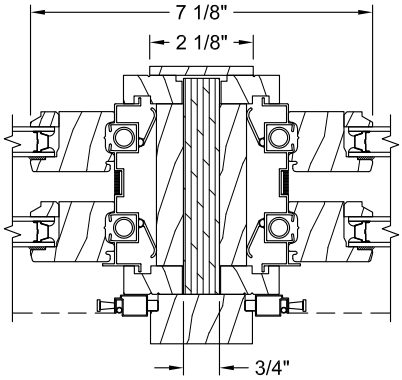

Operator / Operator
with 3/4" Wood Spread Mull

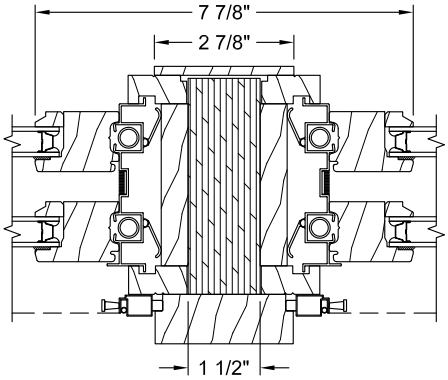

Operator / Operator
with 1 1/2" Wood Spread Mull

Product specifications may change without notice.
Questions? Consult JELD-WEN customer service.

OPERATOR SECTIONS

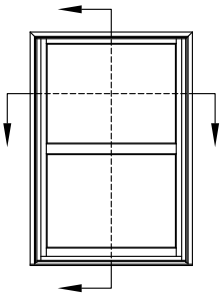

Not To Scale - Reference Only

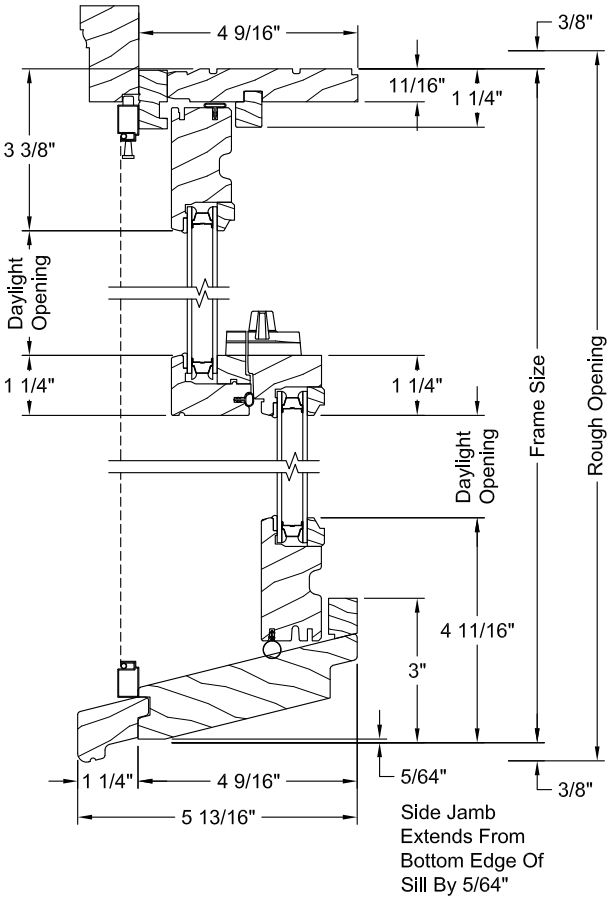

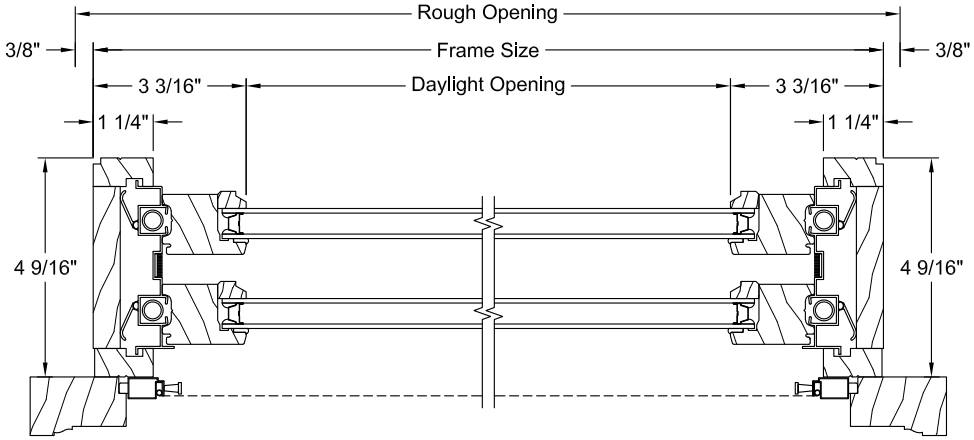

Product specifications may change without notice.
Questions? Consult JELD-WEN customer service.

Scale: 3" = 1' - 0"

OPERATOR POCKET SECTIONS

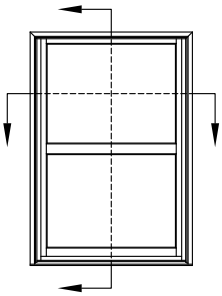

Not To Scale - Reference Only

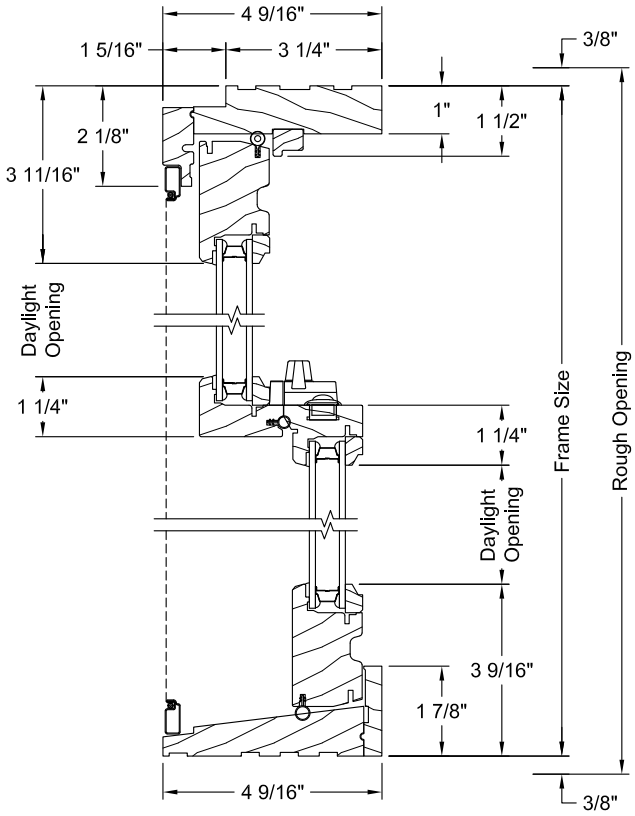

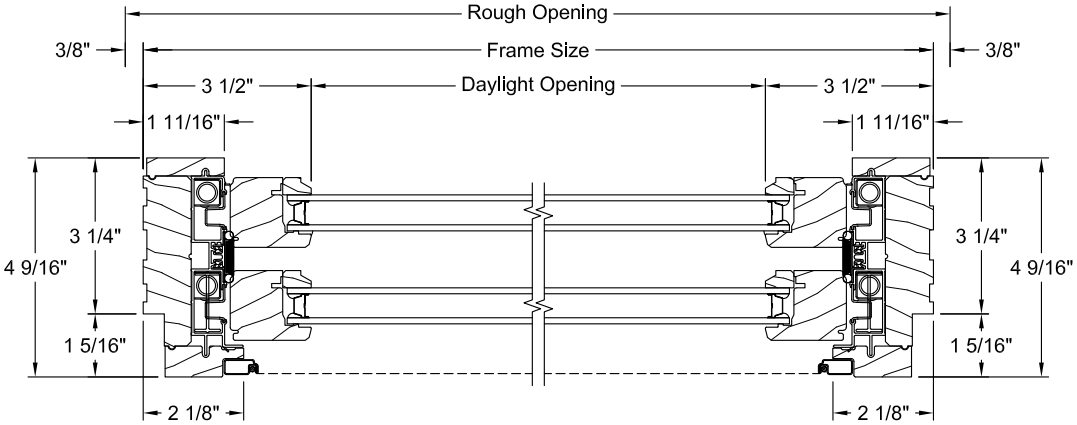

Product specifications may change without notice.
Questions? Consult JELD-WEN customer service.

GEOMETRIC INSASH POCKET SECTIONS

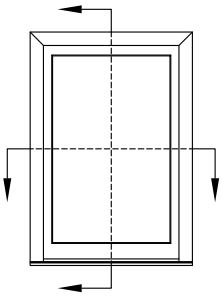

Not To Scale - Reference Only

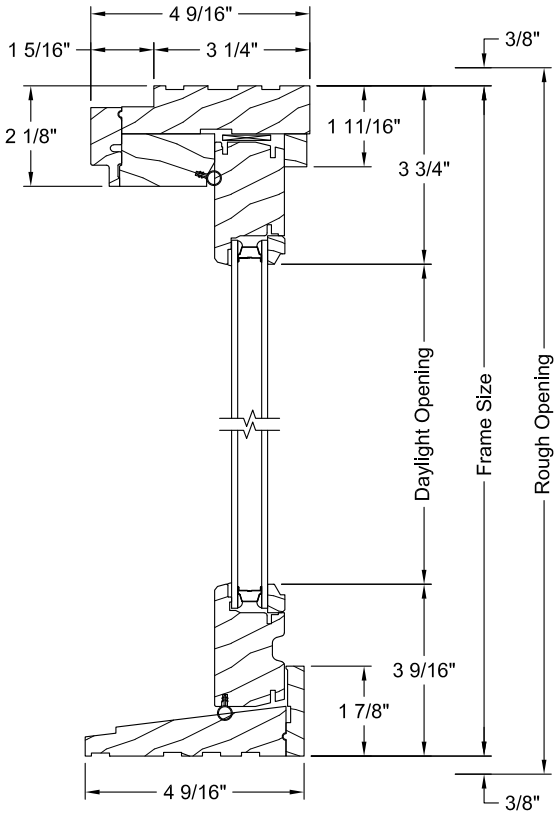

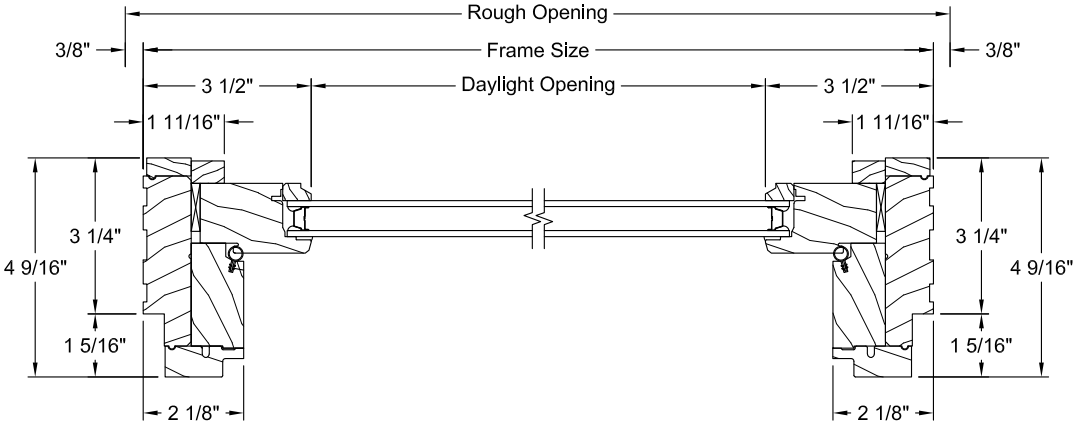

Product specifications may change without notice.
Questions? Consult JELD-WEN customer service.

GEOMETRIC INSASH TRANSOM SECTIONS

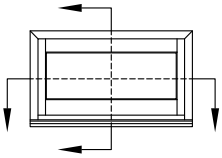

Not To Scale - Reference Only

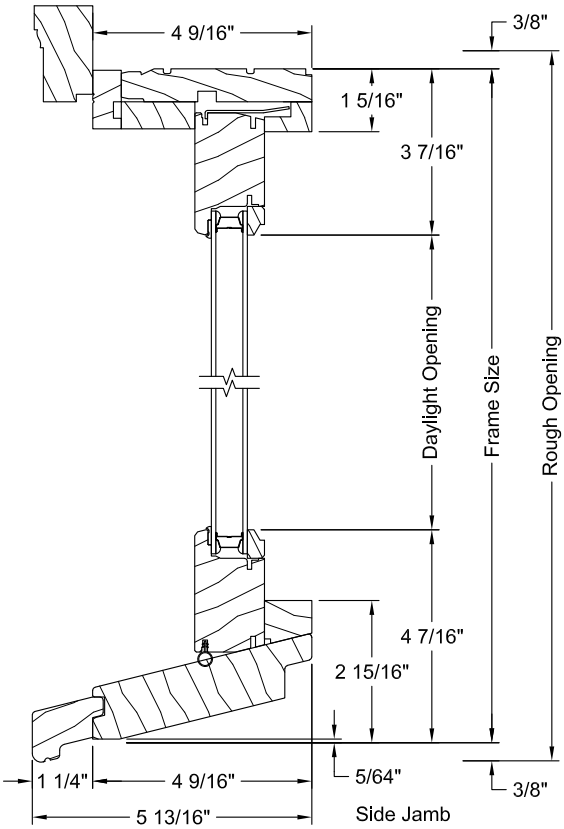

Side Jamb Extends From Bottom Edge Of Sill By 5/64"

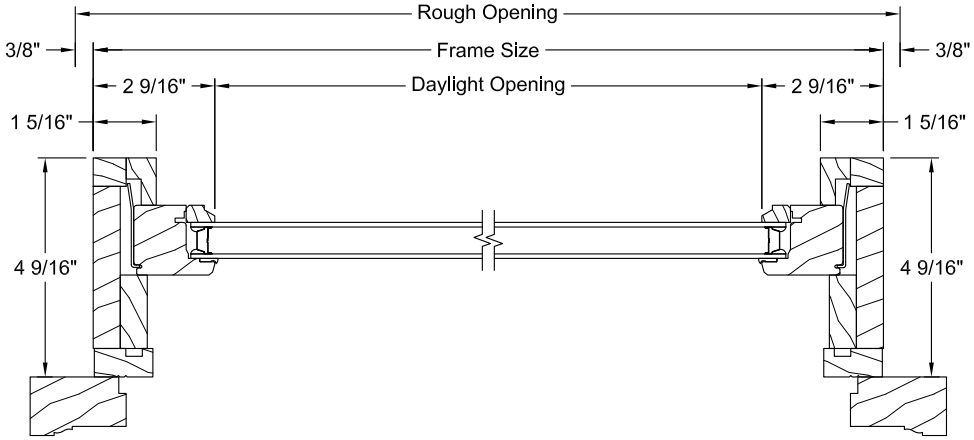

Product specifications may change without notice.
Questions? Consult JELD-WEN customer service.

Scale: 3" = 1' - 0"

MIN-MAX SIZING - OPERATOR

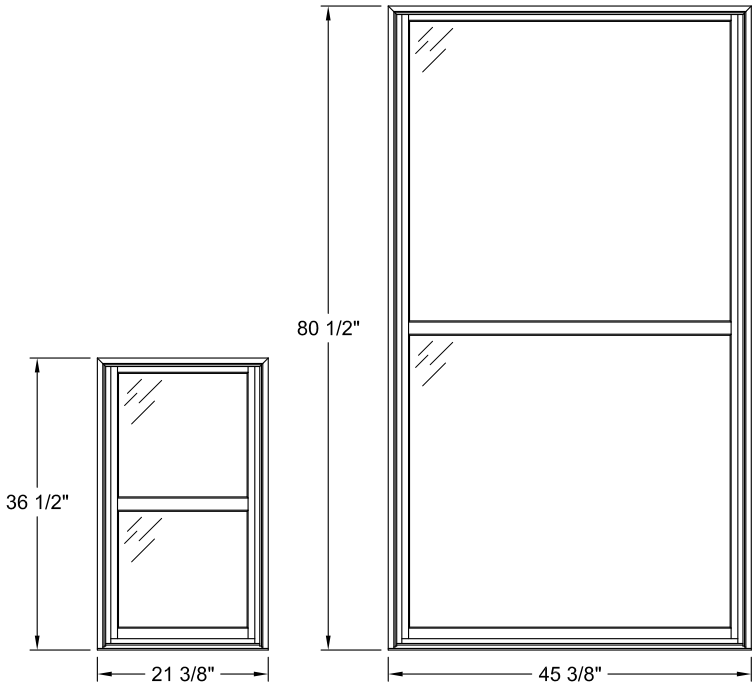

Minimum Size
21 3/8" x 36"

Maximum Size:
45 3/8" x 80 1/2"

Window Width			
21 3/8"	25 3/8"	29 3/8"	31 3/8"
33 3/8"	35 3/8"	37 3/8"	41 3/8"
45 3/8"			
Window Height			
36 1/2"	40 1/2"	48 1/2"	52 1/2"
56 1/2"	60 1/2"	64 1/2"	68 1/2"
72 1/2"	76 1/2"	80 1/2"	

Product specifications may change without notice.
Questions? Consult JELD-WEN customer service.

MIN-MAX SIZING - GEOMETRIC INSASH

Standard Sizing

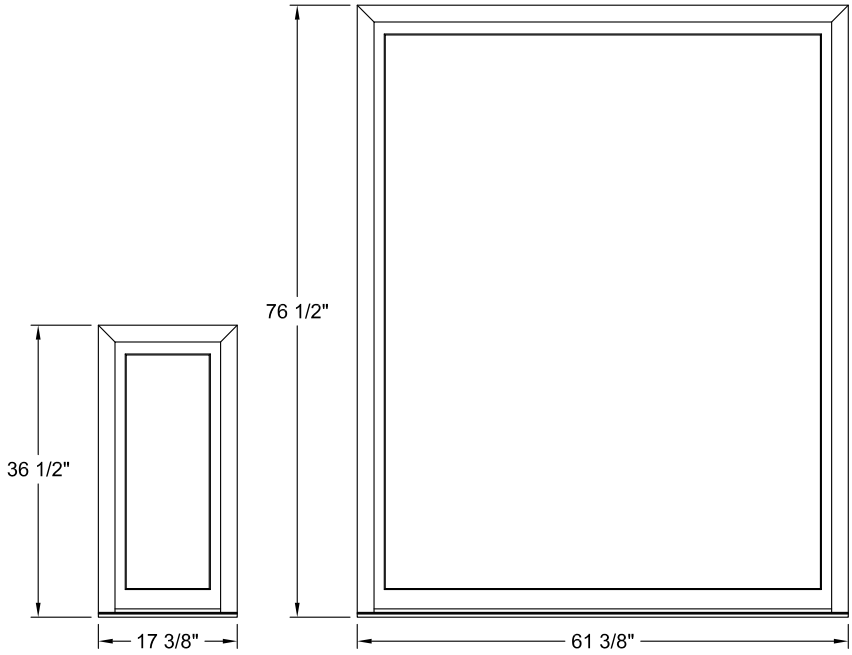

Minimum Size
21 3/8" x 36"

Minimum Size
21 3/8" x 36"

Fixed Insash Width			
17 3/8"	21 3/8"	25 3/8"	29 3/8"
33 3/8"	37 3/8"	41 3/8"	45 3/8"
49 3/8"	53 3/8"	61 3/8"	
Fixed Insash Height			
36 1/2"	40 1/2"	48 1/2"	52 1/2"
56 1/2"	60 1/2"	64 1/2"	68 1/2"
72 1/2"	76 1/2"		

Transom Sizing

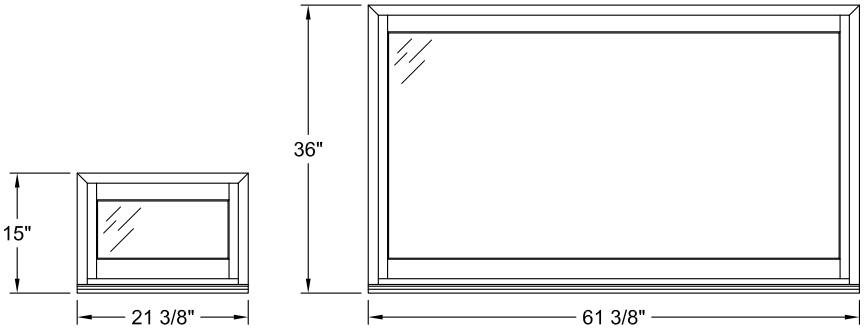

Minimum Size
15" x 21 3/8"

Maximum Size:
61 3/8" x 36"

Transom Width			
21 3/8"	25 3/8"	29 3/8"	33 3/8"
37 3/8"	41 3/8"	42 3/4"	45 3/8"
49 3/8"	50 3/4"	53 3/8"	58 3/4"
61 3/8"			
Transom Height			
15"	18"	24"	36"

Product specifications may change without notice.
Questions? Consult JELD-WEN customer service.

Specifications

	Manufactorer	Series	Color	Dimensions	Additional Information
Hardie Plank Lap Siding	Jameshardie	Artisan	Light Mist	Thickness: 0.625" Length: 144" board Width: 5.25" Exposures: 4"	Smooth finish
Trim	Jameshardie	Artisan	Rock Candy SW6231	Thickness: 1.5" Length: 144" board Width: 5.5" Exposures: 5.5"	
Cedar Wood Siding	Real Cedar	Architect Knotty	Western Red Cedar	Thickness: 3/4" Width: 3 9/16"	
Cedar Wood Decking	Real Cedar	Architect Knotty	Western Red Cedar	Thickness: 3/4" Width: 3 9/16"	
Metal Roofing	Sunlast Metal	Jax beach	No Painted - Galvalume	Width: 19" 1.5" Clipless Snap lock	24 Gauge Steel
Front Door Exterior	Masonite	STA-TRU	Olde World Gold SW7700	44" x 80"	3 Panel Equal Door - Steel
Back Door Exterior	Steve and sons	Patio Doors		60" x 80"	Premium Right-Hand 15-Lite Grille Primed

Option #1

A	B	C	D	E	F	G	H
	WINDOW			FRAME		DETAILS	
	R.O.						
TAG	WIDTH	HEIGHT	HEAD HGT.	MATL.	FINISH	SILL	REMARKS
13	3' - 0"	7' - 6"	10' - 0"	Aluminum	PT2	2' - 0"	SINGLE HUNG
13	3' - 0"	7' - 6"	10' - 0"	Aluminum	PT2	2' - 0"	SINGLE HUNG
14	3' - 0"	4' - 0"	6' - 9 1/2"	Aluminum	PT2	3' - 6"	SINGLE HUNG
13	3' - 0"	7' - 6"	10' - 0"	Aluminum	PT2	2' - 0"	SINGLE HUNG
13	3' - 0"	7' - 6"	10' - 0"	Aluminum	PT2	2' - 0"	SINGLE HUNG
13	3' - 0"	7' - 6"	10' - 0"	Aluminum	PT2	2' - 0"	SINGLE HUNG
13	3' - 0"	7' - 6"	10' - 0"	Aluminum	PT2	2' - 0"	SINGLE HUNG
13	3' - 0"	7' - 6"	10' - 0"	Aluminum	PT2	2' - 0"	SINGLE HUNG
14	3' - 0"	4' - 0"	6' - 9 1/2"	Aluminum	PT2	3' - 6"	SINGLE HUNG
14	3' - 0"	4' - 0"	6' - 9 1/2"	Aluminum	PT2	3' - 6"	SINGLE HUNG
19	1' - 4"	5' - 4"	7' - 1"	Aluminum	PT2	1' - 9"	FIXED
6	1' - 4"	5' - 0"	6' - 9"	Aluminum	PT2	1' - 9"	FIXED
6	1' - 4"	5' - 0"	6' - 9"	Aluminum	PT2	1' - 9"	FIXED
16	3' - 0"	5' - 6"	6' - 6"				SINGLE HUNG
16	3' - 0"	5' - 6"	7' - 6"	Aluminum	PT2	2' - 0"	SINGLE HUNG
15	2' - 0"	3' - 0"	7' - 7 13/32"				SINGLE HUNG
15	2' - 0"	3' - 0"	7' - 7 13/32"				SINGLE HUNG
15	2' - 0"	3' - 0"	7' - 7 13/32"				SINGLE HUNG
16	3' - 0"	5' - 6"	6' - 6"				SINGLE HUNG

Option #2

A	B	C	D	E	F	G	H
	WINDOW			FRAME		DETAILS	
	R.O.						
TAG	WIDTH	HEIGHT	HEAD HGT.	MATL.	FINISH	SILL	REMARKS
13	3' - 0"	7' - 6"	10' - 0"	Aluminum	PT2	2' - 0"	SINGLE HUNG
13	3' - 0"	7' - 6"	10' - 0"	Aluminum	PT2	2' - 0"	SINGLE HUNG
14	3' - 0"	4' - 0"	6' - 9 1/2"	Aluminum	PT2	3' - 6"	SINGLE HUNG
13	3' - 0"	7' - 6"	10' - 0"	Aluminum	PT2	2' - 0"	SINGLE HUNG
13	3' - 0"	7' - 6"	10' - 0"	Aluminum	PT2	2' - 0"	SINGLE HUNG
13	3' - 0"	7' - 6"	10' - 0"	Aluminum	PT2	2' - 0"	SINGLE HUNG
13	3' - 0"	7' - 6"	10' - 0"	Aluminum	PT2	2' - 0"	SINGLE HUNG
13	3' - 0"	7' - 6"	10' - 0"	Aluminum	PT2	2' - 0"	SINGLE HUNG
14	3' - 0"	4' - 0"	6' - 9 1/2"	Aluminum	PT2	3' - 6"	SINGLE HUNG
14	3' - 0"	4' - 0"	6' - 9 1/2"	Aluminum	PT2	3' - 6"	SINGLE HUNG
19	1' - 4"	5' - 4"	7' - 1"	Aluminum	PT2	1' - 9"	FIXED
6	1' - 4"	5' - 0"	6' - 9"	Aluminum	PT2	1' - 9"	FIXED
6	1' - 4"	5' - 0"	6' - 9"	Aluminum	PT2	1' - 9"	FIXED
20	3' - 0"	4' - 6"	5' - 6"				SINGLE HUNG
16	3' - 0"	5' - 6"	7' - 6"	Aluminum	PT2	2' - 0"	SINGLE HUNG
15	2' - 0"	3' - 0"	7' - 7 13/32"				SINGLE HUNG
15	2' - 0"	3' - 0"	7' - 7 13/32"				SINGLE HUNG
15	2' - 0"	3' - 0"	7' - 7 13/32"				SINGLE HUNG
20	3' - 0"	4' - 6"	5' - 6"				SINGLE HUNG

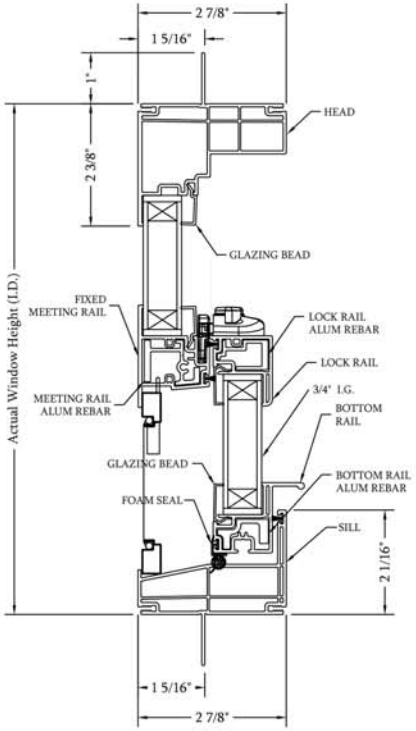

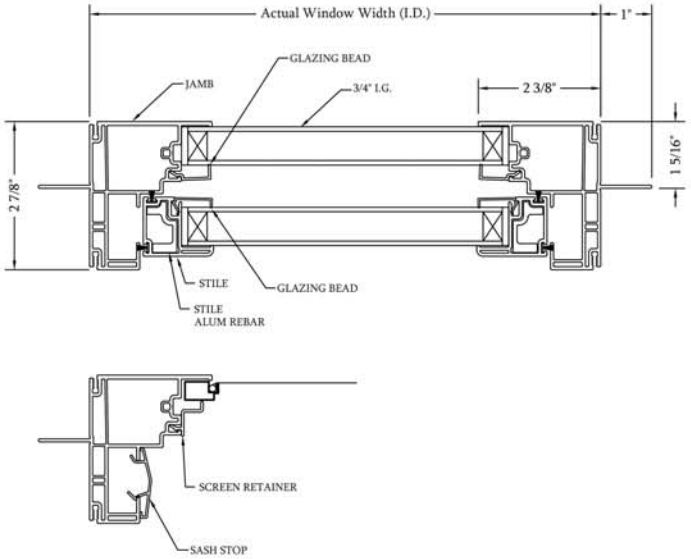

ELEVATE
YOUR VIEW
Manufacturer of Residential Windows and Doors

INSPIRE SERIE
NEW CONSTRUCTION SINGLE HUNG

1850 Westpark Dr., Suite 100
Grand Prairie, TX 75050
Office: 469-490-1100