# HISTORIC AND DESIGN REVIEW COMMISSION

**November 18, 2020**

| | |
|---|---|
| **HDRC CASE NO:** | **2020-388** |
| **ADDRESS:** | 313 N PINE ST |
| **LEGAL DESCRIPTION:** | NCB 585 BLK 3 LOT 7 & 8 |
| **ZONING:** | RM-4, H |
| **CITY COUNCIL DIST.:** | 2 |
| **DISTRICT:** | Dignowity Hill Historic District |
| **APPLICANT:** | Felix Ziga/Ziga Architecture Studio PLLC |
| **OWNER:** | Brett Henneke/Henneke Financial Group LLC |
| **TYPE OF WORK:** | Construction of two, 2-story residential structures |
| **APPLICATION RECEIVED:** | October 02, 2020 |
| **60-DAY REVIEW:** | Not applicable due to City Council Emergency Orders |
| **CASE MANAGER:** | Edward Hall |

## REQUEST:

The applicant is requesting a Certificate of Appropriateness for approval to construct two, 2-story residential structures on the vacant lot at 313 N Pine, located within the Dignowity Hill Historic District. This lot is located at the corner of N Pine and Potomac Streets.

## APPLICABLE CITATIONS:

*Historic Design Guidelines, Chapter 4, Guidelines for New Construction*

1. Building and Entrance Orientation

A. FAÇADE ORIENTATION
*i. Setbacks*—Align front facades of new buildings with front facades of adjacent buildings where a consistent setback has been established along the street frontage. Use the median setback of buildings along the street frontage where a variety of setbacks exist. Refer to UDC Article 3, Division 2. Base Zoning Districts for applicable setback requirements.
*ii. Orientation*—Orient the front façade of new buildings to be consistent with the predominant orientation of historic buildings along the street frontage.
B. ENTRANCES
*i. Orientation*—Orient primary building entrances, porches, and landings to be consistent with those historically found along the street frontage. Typically, historic building entrances are oriented towards the primary street.

2. Building Massing and Form

A. SCALE AND MASS
*i. Similar height and scale*—Design new construction so that its height and overall scale are consistent with nearby historic buildings. In residential districts, the height and scale of new construction should not exceed that of the majority of historic buildings by more than one-story. In commercial districts, building height shall conform to the established pattern. If there is no more than a 50% variation in the scale of buildings on the adjacent block faces, then the height of the new building shall not exceed the tallest building on the adjacent block face by more than 10%.
*ii. Transitions*—Utilize step-downs in building height , wall-plane offsets, and other variations in building massing to provide a visual transition when the height of new construction exceeds that of adjacent historic buildings by more than one-half story.
*iii. Foundation and floor heights*—Align foundation and floor-to-floor heights (including porches and balconies) within one foot of floor-to-floor heights on adjacent historic structures.

B. ROOF FORM
*i. Similar roof forms*—Incorporate roof forms—pitch, overhangs, and orientation—that are consistent with those predominantly found on the block. Roof forms on residential building types are typically sloped, while roof forms on nonresidential

building types are more typically flat and screened by an ornamental parapet wall.
*ii. Façade configuration*—The primary façade of new commercial buildings should be in keeping with established patterns. Maintaining horizontal elements within adjacent cap, middle, and base precedents will establish a consistent street wall through the alignment of horizontal parts. Avoid blank walls, particularly on elevations visible from the street. No new façade should exceed 40 linear feet without being penetrated by windows, entryways, or other defined bays.

D. LOT COVERAGE
*i. Building to lot ratio*—New construction should be consistent with adjacent historic buildings in terms of the building to lot ratio. Limit the building footprint for new construction to no more than 50 percent of the total lot area, unless adjacent historic buildings establish a precedent with a greater building to lot ratio.

3. Materials and Textures

A. NEW MATERIALS
*i. Complementary materials*—Use materials that complement the type, color, and texture of materials traditionally found in the district. Materials should not be so dissimilar as to distract from the historic interpretation of the district. For example, corrugated metal siding would not be appropriate for a new structure in a district comprised of homes with wood siding.
*ii. Alternative use of traditional materials*—Consider using traditional materials, such as wood siding, in a new way to provide visual interest in new construction while still ensuring compatibility.
*iii. Roof materials*—Select roof materials that are similar in terms of form, color, and texture to traditionally used in the district.
*iv. Metal roofs*—Construct new metal roofs in a similar fashion as historic metal roofs. Refer to the Guidelines for Alterations and Maintenance section for additional specifications regarding metal roofs.
*v. Imitation or synthetic materials*—Do not use vinyl siding, plastic, or corrugated metal sheeting. Contemporary materials not traditionally used in the district, such as brick or simulated stone veneer and Hardie Board or other fiberboard siding, may be appropriate for new construction in some locations as long as new materials are visually similar to the traditional material in dimension, finish, and texture. EIFS is not recommended as a substitute for actual stucco.

4. Architectural Details

A. GENERAL
*i. Historic context*—Design new buildings to reflect their time while respecting the historic context. While new construction should not attempt to mirror or replicate historic features, new structures should not be so dissimilar as to distract from or diminish the historic interpretation of the district.
*ii. Architectural details*—Incorporate architectural details that are in keeping with the predominant architectural style along the block face or within the district when one exists. Details should be simple in design and should complement, but not visually compete with, the character of the adjacent historic structures or other historic structures within the district. Architectural details that are more ornate or elaborate than those found within the district are inappropriate.
*iii. Contemporary interpretations*—Consider integrating contemporary interpretations of traditional designs and details for new construction. Use of contemporary window moldings and door surroundings, for example, can provide visual interest while helping to convey the fact that the structure is new. Modern materials should be implemented in a way that does not distract from the historic structure.

5. Garages and Outbuildings

A. DESIGN AND CHARACTER
*v. Garage doors*—Incorporate garage doors with similar proportions and materials as those traditionally found in the district.

6. Mechanical Equipment and Roof Appurtenances

A. LOCATION AND SITING
*i. Visibility*—Do not locate utility boxes, air conditioners, rooftop mechanical equipment, skylights, satellite dishes, and

other roof appurtenances on primary facades, front-facing roof slopes, in front yards, or in other locations that are clearly visible from the public right-of-way.
*ii. Service Areas*—Locate service areas towards the rear of the site to minimize visibility from the public right-of-way.

B. SCREENING
*i. Building-mounted equipment*—Paint devices mounted on secondary facades and other exposed hardware, frames, and piping to match the color scheme of the primary structure or screen them with landscaping.
*ii. Freestanding equipment*—Screen service areas, air conditioning units, and other mechanical equipment from public view using a fence, hedge, or other enclosure.
*iii. Roof-mounted equipment*—Screen and set back devices mounted on the roof to avoid view from public right-of-way.
Historic Design Guidelines, Chapter 5, Guidelines for Site Elements

B. NEW FENCES AND WALLS
*i. Design*—New fences and walls should appear similar to those used historically within the district in terms of their scale, transparency, and character. Design of fence should respond to the design and materials of the house or main structure.
*ii. Location*—Avoid installing a fence or wall in a location where one did not historically exist, particularly within the front yard. The appropriateness of a front yard fence or wall is dependent on conditions within a specific historic district. New front yard fences or wall should not be introduced within historic districts that have not historically had them.
*iii. Height*—Limit the height of new fences and walls within the front yard to a maximum of four feet. The appropriateness of a front yard fence is dependent on conditions within a specific historic district. New front yard fences should not be introduced within historic districts that have not historically had them. If a taller fence or wall existed historically, additional height may be considered. The height of a new retaining wall should not exceed the height of the slope it retains.
*iv. Prohibited materials*—Do not use exposed concrete masonry units (CMU), Keystone or similar interlocking retaining wall systems, concrete block, vinyl fencing, or chain link fencing.
*v. Appropriate materials*—Construct new fences or walls of materials similar to fence materials historically used in the district. Select materials that are similar in scale, texture, color, and form as those historically used in the district, and that are compatible with the main structure. Screening incompatible uses—Review alternative fence heights and materials for appropriateness where residential properties are adjacent to commercial or other potentially incompatible uses.

3. Landscape Design

A. PLANTINGS
*i. Historic Gardens*— Maintain front yard gardens when appropriate within a specific historic district.
ii. Historic Lawns—Do not fully remove and replace traditional lawn areas with impervious hardscape. Limit the removal of lawn areas to mulched planting beds or pervious hardscapes in locations where they would historically be found, such as along fences, walkways, or drives. Low-growing plantings should be used in historic lawn areas; invasive or large-scale species should be avoided. Historic lawn areas should never be reduced by more than 50%.
*iii. Native xeric plant materials*—Select native and/or xeric plants that thrive in local conditions and reduce watering usage. See UDC Appendix E: San Antonio Recommended Plant List—All Suited to Xeriscape Planting Methods, for a list of appropriate materials and planting methods. Select plant materials with a similar character, growth habit, and light requirements as those being replaced.
*iv. Plant palettes*—If a varied plant palette is used, incorporate species of taller heights, such informal elements should be restrained to small areas of the front yard or to the rear or side yard so as not to obstruct views of or otherwise distract from the historic structure.
*v. Maintenance*—Maintain existing landscape features. Do not introduce landscape elements that will obscure the historic structure or are located as to retain moisture on walls or foundations (e.g., dense foundation plantings or vines) or as to cause damage.

B. ROCKS OR HARDSCAPE
*i. Impervious surfaces* —Do not introduce large pavers, asphalt, or other impervious surfaces where they were not historically located.

*ii. Pervious and semi-pervious surfaces*—New pervious hardscapes should be limited to areas that are not highly visible, and should not be used as wholesale replacement for plantings. If used, small plantings should be incorporated into the design.
*iii. Rock mulch and gravel* - Do not use rock mulch or gravel as a wholesale replacement for lawn area. If used, plantings should be incorporated into the design.

D. TREES
*i. Preservation*—Preserve and protect from damage existing mature trees and heritage trees. See UDC Section 35-523 (Tree Preservation) for specific requirements.
*ii. New Trees* – Select new trees based on site conditions. Avoid planting new trees in locations that could potentially cause damage to a historic structure or other historic elements. Species selection and planting procedure should be done in accordance with guidance from the City Arborist.

5. Sidewalks, Walkways, Driveways, and Curbing

A. SIDEWALKS AND WALKWAYS
*i. Maintenance*—Repair minor cracking, settling, or jamming along sidewalks to prevent uneven surfaces. Retain and repair historic sidewalk and walkway paving materials—often brick or concrete—in place.
*ii. Replacement materials*—Replace those portions of sidewalks or walkways that are deteriorated beyond repair. Every effort should be made to match existing sidewalk color and material.
*iii. Width and alignment*—Follow the historic alignment, configuration, and width of sidewalks and walkways. Alter the historic width or alignment only where absolutely necessary to accommodate the preservation of a significant tree.
*iv. Stamped concrete*—Preserve stamped street names, business insignias, or other historic elements of sidewalks and walkways when replacement is necessary.
*v. ADA compliance*—Limit removal of historic sidewalk materials to the immediate intersection when ramps are added to address ADA requirements.

B. DRIVEWAYS
*i. Driveway configuration*—Retain and repair in place historic driveway configurations, such as ribbon drives. Incorporate a similar driveway configuration—materials, width, and design—to that historically found on the site. Historic driveways are typically no wider than 10 feet. Pervious paving surfaces may be considered where replacement is necessary to increase stormwater infiltration.
*ii. Curb cuts and ramps*—Maintain the width and configuration of original curb cuts when replacing historic driveways. Avoid introducing new curb cuts where not historically found.

7. Off-Street Parking

A. LOCATION
*i. Preferred location*—Place parking areas for non-residential and mixed-use structures at the rear of the site, behind primary structures to hide them from the public right-of-way. On corner lots, place parking areas behind the primary structure and set them back as far as possible from the side streets. Parking areas to the side of the primary structure are acceptable when location behind the structure is not feasible. See UDC Section 35-310 for district-specific standards.
*ii. Front*—Do not add off-street parking areas within the front yard setback as to not disrupt the continuity of the streetscape.
*iii. Access*—Design off-street parking areas to be accessed from alleys or secondary streets rather than from principal streets whenever possible.

B. DESIGN
*i. Screening*—Screen off-street parking areas with a landscape buffer, wall, or ornamental fence two to four feet high—or a combination of these methods. Landscape buffers are preferred due to their ability to absorb carbon dioxide. See UDC Section 35-510 for buffer requirements.
*ii. Materials*—Use permeable parking surfaces when possible to reduce run-off and flooding. See UDC Section 35-526(j) for specific standards.
*iii. Parking structures*—Design new parking structures to be similar in scale, materials, and rhythm of the surrounding

historic district when new parking structures are necessary.

*Standard Specifications for Windows in Additions and New Construction*

Consistent with the Historic Design Guidelines, the following recommendations are made for windows to be used in new construction:

- GENERAL: Windows used in new construction should be similar in appearance to those commonly found within the district in terms of size, profile, and configuration. While no material is expressly prohibited by the Historic Design Guidelines, a high quality wood or aluminum-clad wood window product often meets the Guidelines with the stipulations listed below.
- SIZE: Windows should feature traditional dimensions and proportions as found within the district.
- SASH: Meeting rails must be no taller than 1.25". Stiles must be no wider than 2.25". Top and bottom sashes must be equal in size unless otherwise approved.
- DEPTH: There should be a minimum of 2" in depth between the front face of the window trim and the front face of the top window sash. This must be accomplished by recessing the window sufficiently within the opening or with the installation of additional window trim to add thickness. All windows should be supplied in a block frame and exclude nailing fins which limit the ability to sufficiently recess the windows.
- TRIM: Window trim must feature traditional dimensions and architecturally appropriate casing and sloped sill detail.
- GLAZING: Windows should feature clear glass. Low-e or reflective coatings are not recommended for replacements. The glazing should not feature faux divided lights with an interior grille. If approved to match a historic window configuration, the window should feature true, exterior muntins.
- COLOR: Wood windows should feature a painted finish. If a clad or non-wood product is approved, white or metallic manufacturer's color is not allowed and color selection must be presented to staff.

## FINDINGS:

a. The applicant is requesting a Certificate of Appropriateness for approval to construct two, 2-story residential structures on the vacant lot at 313 N Pine, located within the Dignowity Hill Historic District. This lot is located at the corner of N Pine and Potomac Streets.

b. CONCEPTUAL APPROVAL – The applicant received conceptual approval at the September 16, 2020, Historic and Design Review Commission hearing with the following stipulations:

   i. That both setbacks be greater than those found on the adjacent historic structures. Additionally, staff recommends that setbacks be measured from the front (street) face of the curb to ensure a uniform measurement. Staff recommends that the proposed setback diagram be revised to note a deeper setback. **This stipulation has not been met.**

   ii. That the small, fixed windows be eliminated and full size windows, as found with correct proportions, as found historically within the district be installed. ***This stipulation has been met.***

   iii. That the proposed standing seam metal roofs feature panels that are 18 to 21 inches wide, seams that are 1 to 2 inches in height, a standard galvalume finish and a crimped ridge seam or a low profile ridge cap. If a ridge cap is used, it must be reviewed and approved prior to installation. The proposed siding should feature an exposure of four inches, a smooth finish, and a thickness of ¾". Corner trim was conceptually approved and columns were conceptually approved to be twelve (12) inches square. ***This stipulation has been met.***

   iv. That the proposed windows adhere to staff's standards for windows in new construction, as noted in the applicable citations. ***This stipulation has been met.***

   v. That the proposed driveways not exceed ten (10) feet in width. This stipulation has been met.

   vi. That the proposed walkways be added to the site plan. This stipulation has been met.

   vii. That a landscaping plan be developed to be consistent with the Guidelines for Site Elements. ***This stipulation has been met.***

   viii. That the proposed mechanical equipment be shown on the site plan and screened from view from the public right of way. ***This stipulation has been met.***

c. PREVIOUS REVIEW – This request was heard by the Historic and Design Review Commission on October 21, 2020. At that hearing, the HDRC referred this request to the Design Review Committee.

d. DESIGN REVIEW COMMITTEE – This request was reviewed by the Design Review Committee on October 27. At that meeting, the Committee discussed the proposed setbacks and their relationship with the adjacent historic structures.
e. CONTEXT & DEVELOPMENT PATTERN – This lot is currently void of any structures. This lot is bounded by Potomac Street to the north and N Pine Street to the east. Historic structures on the 300 block of N Pine and the 100 block of Potomac all feature one story in height with the exception of one structure, 319 N Pine. The historic structure that was previously located on this block was oriented toward N Pine.
f. SETBACKS – The applicant has submitted a site plan noting the proposed setbacks of both structures. The proposed new construction features setbacks that are equal to or greater than those found historically on the block. The measurement from the curb as noted on the site plan is not accurately represented as the historic house to the south is illustrated with a deeper setback than what is annotated. Staff finds that both structures should feature a setback that is deeper than the house at 303 N Pine (first house immediately located to the south of this site).
g. SCALE & MASS – Per the Guidelines for New Construction 2.A.i., a height and massing similar to historic structures in the vicinity of the proposed new construction should be used. In residential districts, the height and scale of new construction should not exceed that of the majority of historic buildings by more than one-story. This block of N Pine features one 2-story residential structure and four, 1-story residential structures. Potomac features only single story structures. The applicant has submitted a street elevation of this block of N Pine, noting a comparable height with the adjacent two story structure. Due to the change in grade, the proposed new construction will appear significantly taller than the historic structure to the immediate south. Generally, staff finds the proposed height to be consistent with the Guidelines.
h. ENTRANCES –According to the Guidelines for New Construction 1.B.i., primary building entrances should be oriented towards the primary street. The applicant has proposed to orient both structures toward N Pine. This is consistent with the Guidelines.
i. FOUNDATION & FLOOR HEIGHTS – Per the Guidelines for New Construction 2.A.iii., applicants should align foundation and floor-to-floor heights within one foot of floor-to-floor heights on adjacent historic structures. The applicant has proposed foundation heights of eighteen (18) inches for both structures. This is consistent with the Guidelines.
j. ROOF FORMS – The applicant has proposed roof forms that include front and side facing gabled roofs and hipped roofs. Staff finds the proposed roof forms to be appropriate and consistent with the Guidelines.
k. WINDOW & DOOR OPENINGS – Per the Guidelines for New Construction 2.C.i., window and door openings with similar proportions of wall to window space as typical with nearby historic facades should be incorporated into new construction. Staff finds the proposed window and door openings to be consistent with the Guidelines and historic examples found within the district.
l. PORCH MASSING – The applicant has proposed porch massing that is integral to the massing of both structures. Generally, staff finds the proposed porch massing to be appropriate.
m. LOT COVERAGE – The applicant has proposed lot coverage that totals approximately thirty-three (33) percent of the total lot. This is consistent with the UDC.
n. MATERIALS – The applicant has proposed materials that include composite siding, asphalt shingle roofs, standing seam metal roofs and wood windows. The proposed standing seam metal roofs should feature panels that are 18 to 21 inches wide, seams that are 1 to 2 inches in height, a standard galvalume finish and a crimped ridge seam or a low profile ridge cap. If a ridge cap is used, it must be reviewed and approved prior to installation. The proposed siding should feature an exposure of four inches, a smooth finish, a thickness of ¾" and corner trim. Columns should be six or twelve inches square. The applicant has noted these specifications on the submitted construction documents.
o. WINDOW MATERIALS – The applicant has noted the installation of wood windows. The proposed windows are consistent with staff's standards specifications for windows in new construction.
p. ARCHITECTURAL ELEMENTS – Generally, staff finds the proposed architectural elements to be appropriate.
q. SITE ELEMENTS (Driveways) – The applicant has proposed ribbon strip driveways to be located to the south of each structure. This block of N Pine features irregular driveway configurations. Staff finds the proposed driveway locations to be appropriate. The applicant has noted an overall width of nine (9) feet for both driveways.

r. SITE ELEMENTS (Walkways) – The applicant has proposed to install walkways that lead from the front porch to the right of way. Staff finds the proposed concrete walkways to be appropriate and consistent with the Guidelines.
s. SITE ELEMENTS (Landscaping) – The applicant has submitted a landscaping plan that is consistent with the Guidelines for Site Elements.
t. SITE ELEMENTS (Fencing) – The applicant has proposed the installation of both front yard, cattle panel and rear privacy fencing. The proposed front yard fence will not exceed four (4) feet in height, while the proposed privacy fence will not exceed six (6) feet in height. The proposed fencing is appropriate and consistent with the Guidelines.
u. MECHANICAL EQUIPMENT – The applicant has noted the location and screening of mechanical equipment.

**RECOMMENDATION:**

Staff recommends final approval based on findings a through u, with the stipulation that the proposed new construction feature increased setbacks that will result in both structures featuring a setback that is deeper than the house at 303 N Pine (first house immediately located to the south of this site).

A foundation inspection is to be scheduled with OHP staff to ensure that foundation setbacks and heights are consistent with the approved design. The inspection is to occur after the installation of form work and prior to the installation of foundation materials.

A standing seam metal roof inspection is to be schedule with OHP staff to ensure that roofing materials are consistent with approved design. An industrial ridge cap is not to be used.

# City of San Antonio One Stop


November 12, 2020

1:1,000

0 0.0075 0.015 0.03 mi

0 0.0125 0.025 0.05 km

CITY OF SAN ANTONIO
OFFICE OF HISTORIC PRESERVATION

**Historic and Design Review Commission**
***Design Review Committee Report***

DATE: October 27, 2020 HDRC Case #:

Address: 313 N Pine Meeting Location: WebEx

APPLICANT: Felix Ziga

DRC Members present: Jeff Fetzer, Gabriel Velasquez, Anne-Marie Grube

Staff Present: Edward Hall

Others present: Brett Henneke

**REQUEST: Construction of two, 2-story residential structures on the vacant lot at 313 N Pine**

**COMMENTS/CONCERNS:**
FZ: Overview of proposed setbacks in relationship to adjacent, historic structures
AMG: Can the setback of building two be increased to be set behind the property to the south? The proposed two story massing in addition to the reduced setback is may be inappropriate.
GV: Appreciates the proposed design (overhangs) as proposed. Relates to the historic structures within the district.
FZ: House can be pushed back to increase the setback; however, the houses will lose square footage.
JF: Questions regarding building 1's setback. The primary issue and concern is the fact that building two is in front of the historic house to the house. Can the two houses be flipped in their location and a gable roof be used adjacent to the lot to the immediate note of the one story historic structure. The houses will not need to be reduced in size.
FZ: Does not want to locate the Craftsman house at the corner to be immediately across the street from a historic Craftsman structure.
AMG: Questions regarding the heights of the adjacent historic structures (not certain).
GV: The proposed roof pitches are related to the style of the adjacent structures. Can the depth of the house be reduced?

JF: Can 3d images be produced for upcoming hearing?

***OVERALL COMMENTS:***

ZIGA ARCHITECTURE STUDIO
Architecture | Interiors | Historic Preservation

**313 N PINE – LOT 8 – PROJECT NARRATIVE – HDRC FINAL 2 REVISIONS**

Requesting final OHP/HDRC approval to construct two new construction two-story residences a vacant lot, following the historic development pattern along N. Pine St. A concrete walkway will connect the front porches and the sidewalks at the public right-of-way.

There is a historic two-story house located directly across the street on Potomac and Pine. Additionally, the site slopes down away from the existing 2-story home and every effort has been made to keep our ridge lines at or below those of the neighboring structure. The proposed design will not be more than one story taller than its historic neighbors, per historic design guideline recommendations, and will not overwhelm the adjacent historic houses. Building 2's porch massing and roof slope also helps break down the mass of the structure as it transitions back to 1-story to the neighboring property to the south.

The existing houses on N. Pine have front setbacks ranging between +/-5ft to +/-13ft, measured to the assumed property line. This is in addition to the depth provided by sidewalks and public right-of-way easements, which is approximately an additional 13ft. The proposed homes will be set back further than the calculated MEDIAN historic setback of 26ft 3in, at a proposed minimum front setback of 27ft (Building 1) and 27ft (Building 2), when measured from the curb to the outermost projection of front roof eave. Additionally, with the property being a corner lot, we are also respecting the median historic setback line along Potomac street, and allowing for a +/- 18'-4" setback from the property line to building face, or minimum 26ft 4in when measured from the curb to roof overhang above.

The proposed design will have a slab on grade foundation and will be elevated from the ground to match the foundation heights of other historic houses on the block. Existing foundation heights are consistently around 18in. The proposed design will have an 18in foundation height at the high side of slope and will be within a foot of the tallest foundation height on the block.

Although the proposed homes are very similar in floor plan, they distinguish themselves from each other with the exterior design, massing, scale and proportions. Building 1 has drawn inspiration from the folk Victorian home directly to the south located at 303 N Pine St., and building 2 has drawn design inspiration from the 2-story craftsman located directly to the north across Potomac St., located at 319 N Pine St. Additionally, during our conceptual approval HDRC hearing, we were granted siding and column details as outlined in the attached commission action letter.

During our DRC meeting on 10/27/2020, it was suggested that one strategy to alleviate our minimum front setback requirements would be to explore flipping Building 1 and Building 2 on the site plan, allowing for the corner condition to have a lesser front setback, very typical of the neighborhood. Additional exhibits illustrate the exploration of this alternative solution, however we noticed it created a harsher transition between the proposed 2-story structures and the neighbor directly to the South.

Although not ideal, we have opted for reducing the footprint of Building 2 by 18”, allowing us to keep the porch massing, and articulation and depth in the front elevations, and inspirational architectural styles. Additionally, the historic Sanborn’s Insurance Map exhibit illustrates that the single family residence that was on Lot 8 had much shallower front and side setbacks than what we are proposing, therefore we believe we are following the intent and spirit of the Historic Design Guidelines for New Construction, and the proposed design does not break the spirit of the Unified Development Code or compromise public health, safety or welfare.

ZIGA ARCHITECTURE STUDIO
Architecture | Interiors | Historic Preservation

# New Infill Residences in Dignowity Hill Historic District

313 N. Pine St. - Lot 8, San Antonio, TX 78202

HDRC Final: blockface front building setback analysis

not to scale

10-29-2020

north

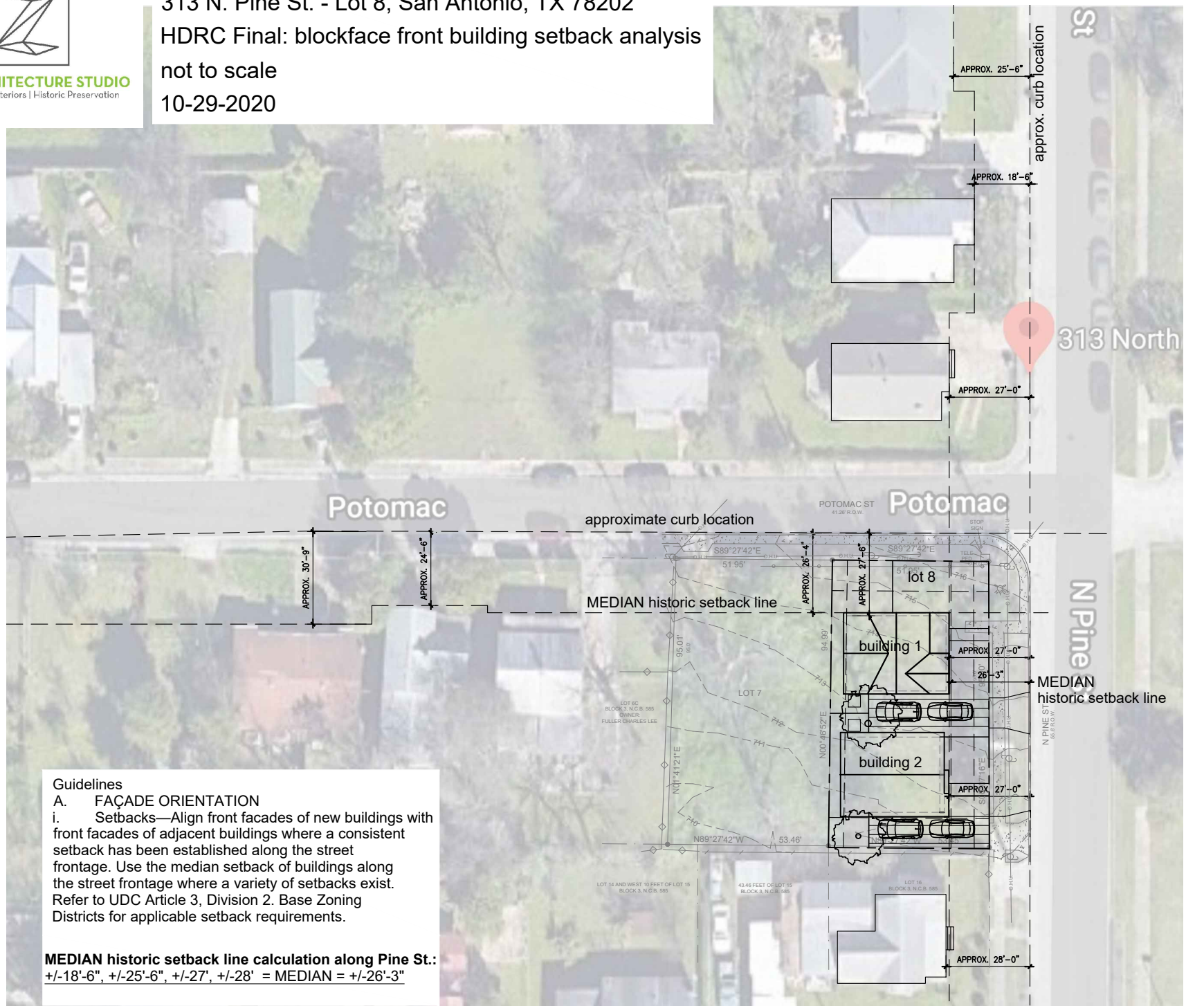


Guidelines
A. FAÇADE ORIENTATION
i. Setbacks—Align front facades of new buildings with front facades of adjacent buildings where a consistent setback has been established along the street frontage. Use the median setback of buildings along the street frontage where a variety of setbacks exist. Refer to UDC Article 3, Division 2. Base Zoning Districts for applicable setback requirements.

**MEDIAN historic setback line calculation along Pine St.:**
+/-18'-6", +/-25'-6", +/-27', +/-28' = MEDIAN = +/-26'-3"

note: all front building setback dimensions are estimates and are measured to the curb. when property lines are not parallell to curb, dimensions may vary. drawing is not to scale and for illustrative of design intent purposes only

*drawing for review only, not for construction, permitting, or regulatory approval*

ZIGA ARCHITECTURE STUDIO
Architecture | Interiors | Historic Preservation

New Infill Residences in Dignowity Hill Historic District
313 N. Pine St. - Lot 8, San Antonio, TX 78202
HDRC Final: landscape site plan
1/16" = 1'-0"
10-15-2020

north

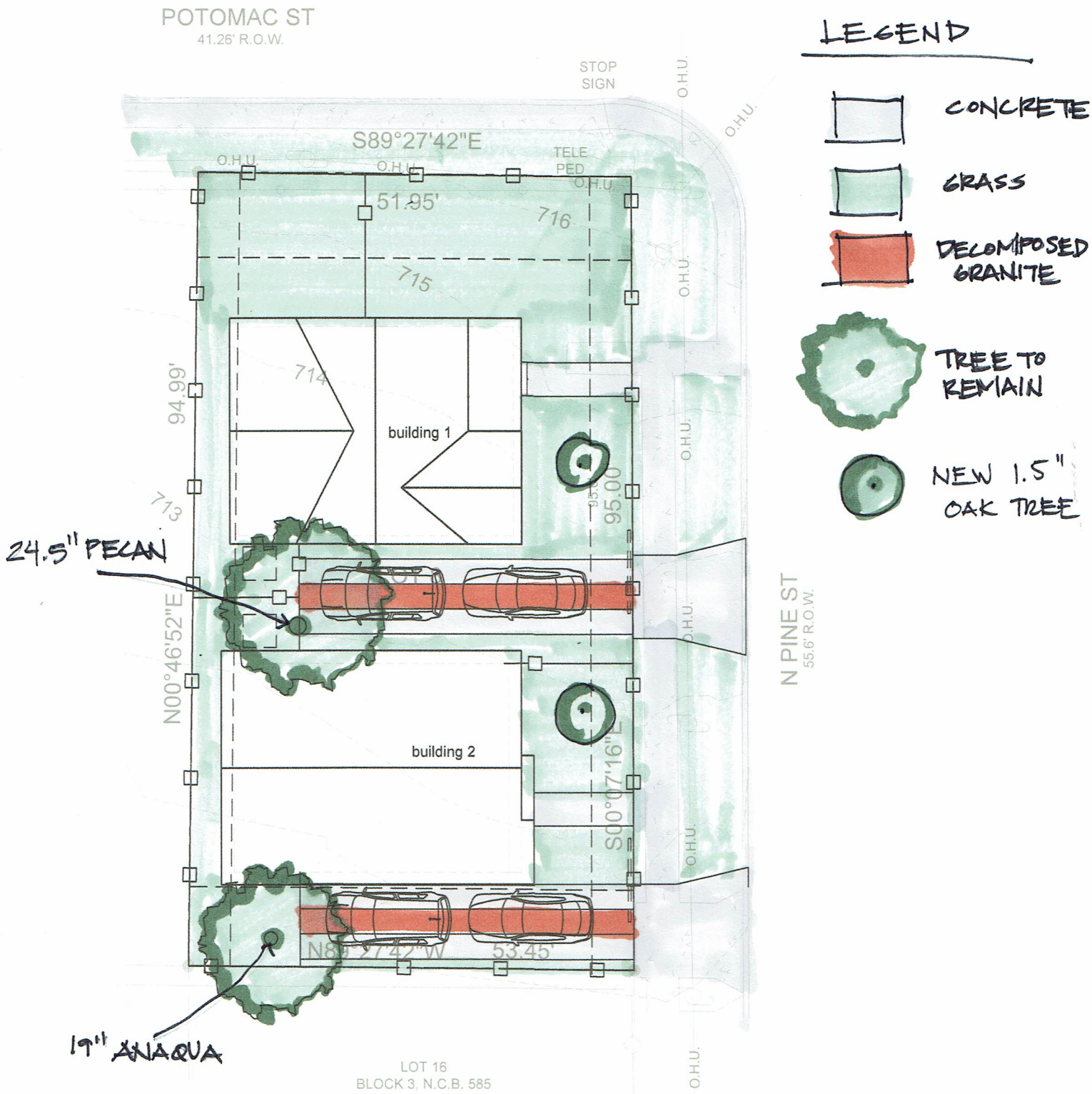


landscape site plan

*drawing for review only, not for construction, permitting, or regulatory approval*

ZIGA ARCHITECTURE STUDIO
Architecture | Interiors | Historic Preservation

New Infill Residences in Dignowity Hill Historic District
313 N. Pine St. - Lot 8, San Antonio, TX 78202
HDRC Final: REVISED blockface section analysis - PROPOSED
not to scale
10-29-2020

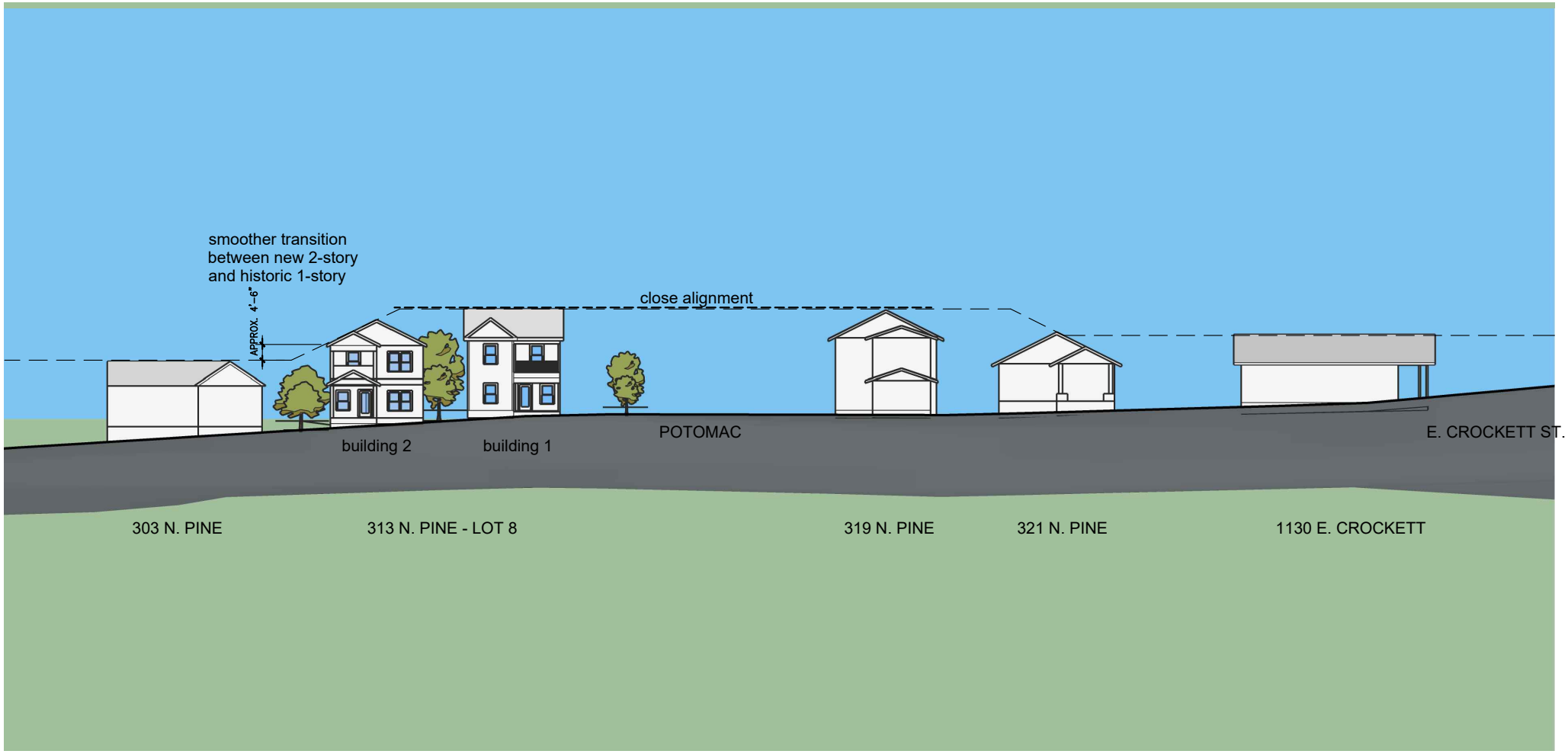


*drawing for review only, not for construction, permitting, or regulatory approval*

note: all grade elevation change dimensions are extrapolated from google earth. drawing is not to scale and for illustrative of design intent purposes only

ZIGA ARCHITECTURE STUDIO
Architecture | Interiors | Historic Preservation

New Infill Residences in Dignowity Hill Historic District
313 N. Pine St. - Lot 8, San Antonio, TX 78202
HDRC Final: REVISED blockface section analysis - ALTERNATE
not to scale
10-29-2020

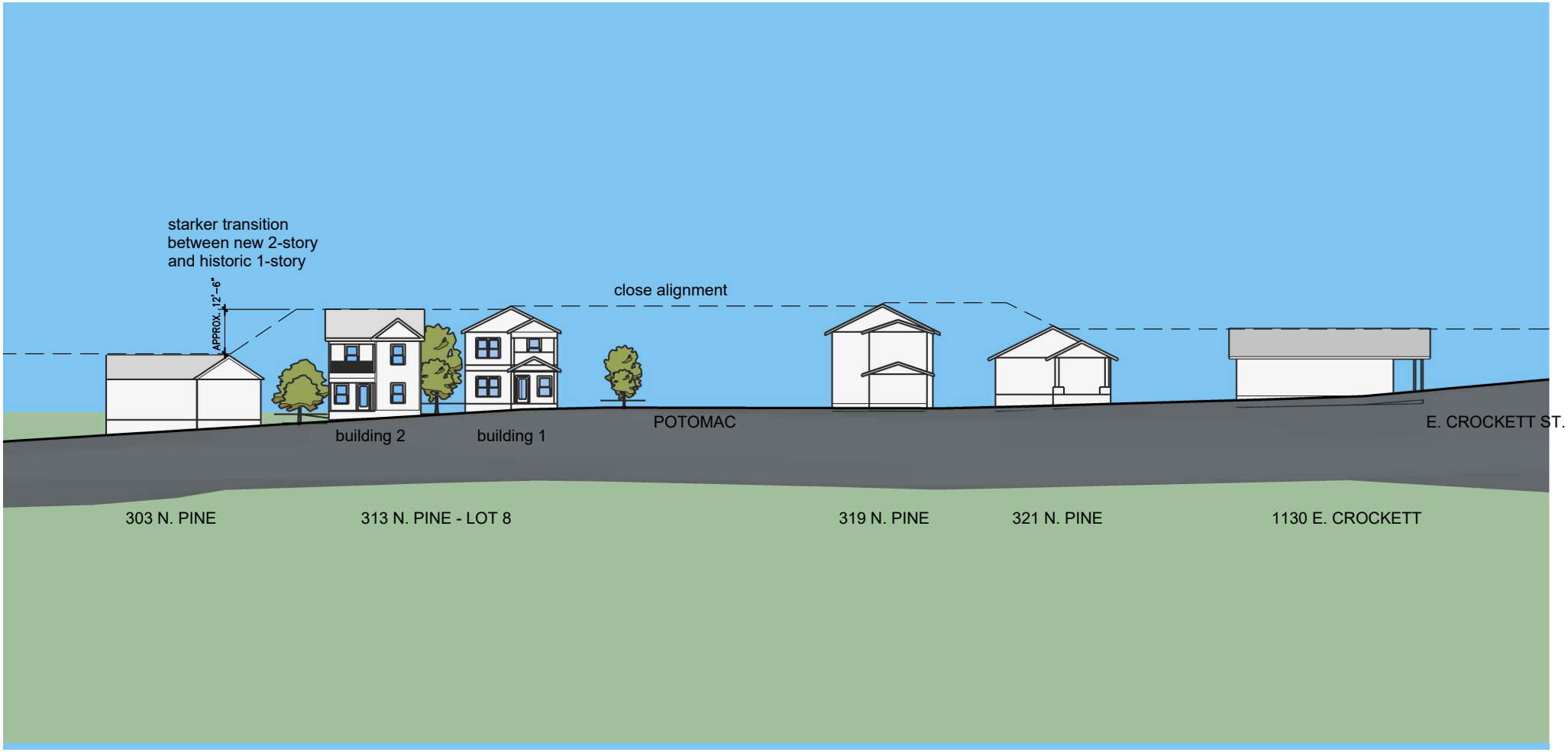


note: all grade elevation change dimensions are extrapolated from google earth. drawing is not to scale and for illustrative of design intent purposes only

*drawing for review only, not for construction, permitting, or regulatory approval*

# Site Photos

ZIGA ARCHITECTURE STUDIO
Architecture | Interiors | Historic Preservation

# Site Photos

ZIGA ARCHITECTURE STUDIO
Architecture | Interiors | Historic Preservation

# Site Photos

ZIGA ARCHITECTURE STUDIO
Architecture | Interiors | Historic Preservation

# Site Photos

ZIGA ARCHITECTURE STUDIO
Architecture | Interiors | Historic Preservation

# Site Photos

ZIGA ARCHITECTURE STUDIO
Architecture | Interiors | Historic Preservation

# FOUNDATION HEIGHTS ALONG N. PINE ST.

+/- 18IN

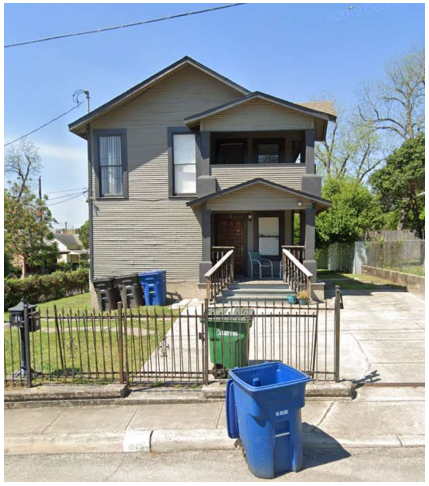

+/- 18IN

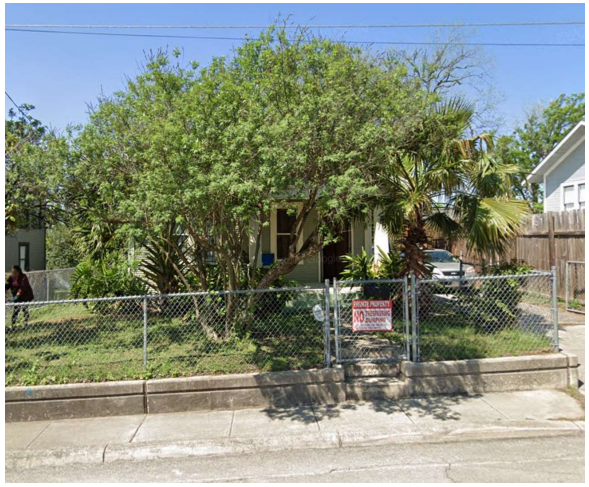

+/- 18IN

+/- 18IN

The historic houses on this block have foundation heights consistently around 18in. The proposed 18 in foundation height is within one foot of the highest foundation height as recommended by the historic design guidelines.

ZIGA ARCHITECTURE STUDIO
Architecture | Interiors | Historic Preservation

# HISTORIC DEVELOPMENT PATTERN OF HOMES FACING N. PINE ST. & HISTORIC SETBACKS ON SUBJECT PROPERTY

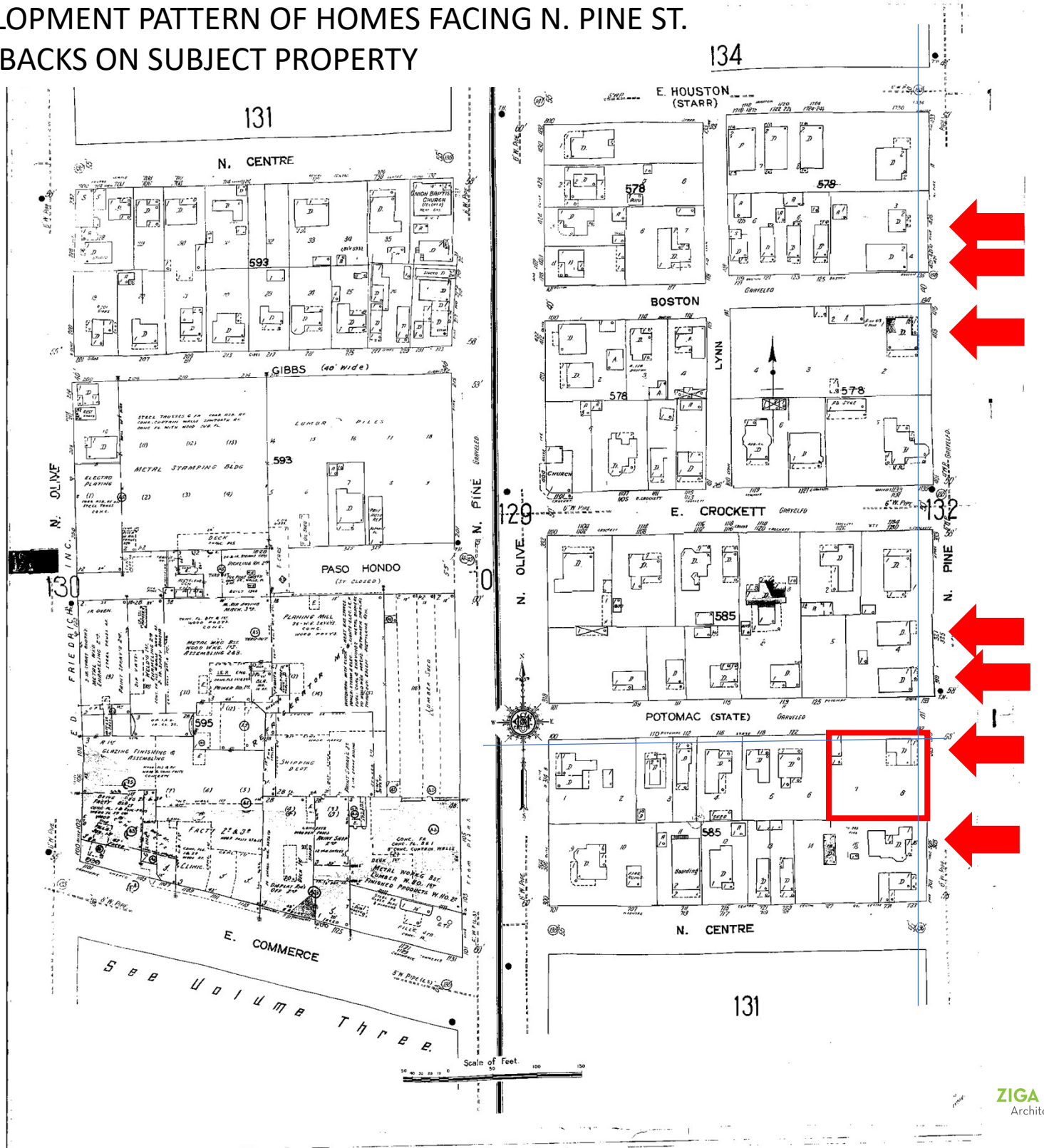


ZIGA ARCHITECTURE STUDIO
Architecture | Interiors | Historic Preservation

STANDING SEAM METAL ROOF

HARDIE ARTISAN LAP SIDING, SMOOTH FINISH WITH 4” EXPOSURE

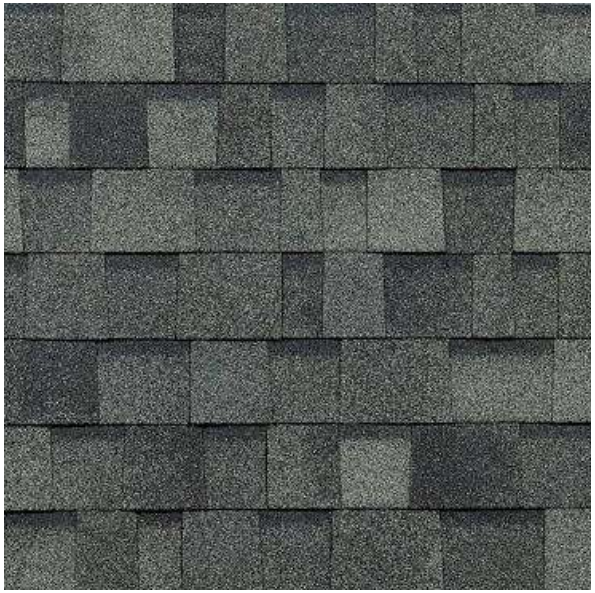

30 YEAR ASPHALT SHINGLE ROOF

HARDIE BOARD AND BATTEN SIDING

HARDIE SHAKE SIDING

ZIGA ARCHITECTURE STUDIO
Architecture | Interiors | Historic Preservation

PROPOSED 6’-0” CEDAR PRIVACY FENCE AT REAR & SIDE YARDS

PROPOSED 4’-0” WOOD AND CATTLE WIRE FRONT YARD FENCE

ZIGA ARCHITECTURE STUDIO
Architecture | Interiors | Historic Preservation

# 313 N PINE-LOT 8 Exterior Paint Color Scheme
# BUILDING 1

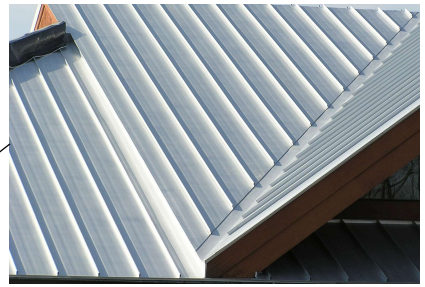

STANDING SEAM
METAL ROOF
ACCENT OVER
AWNING

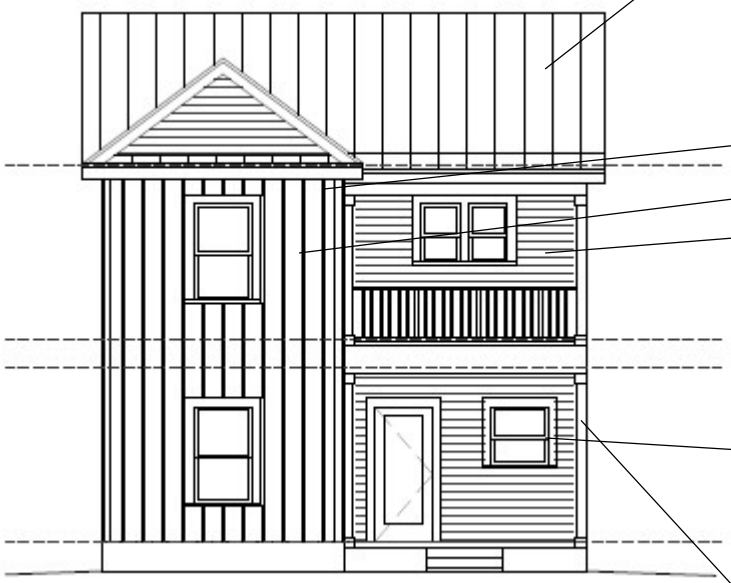

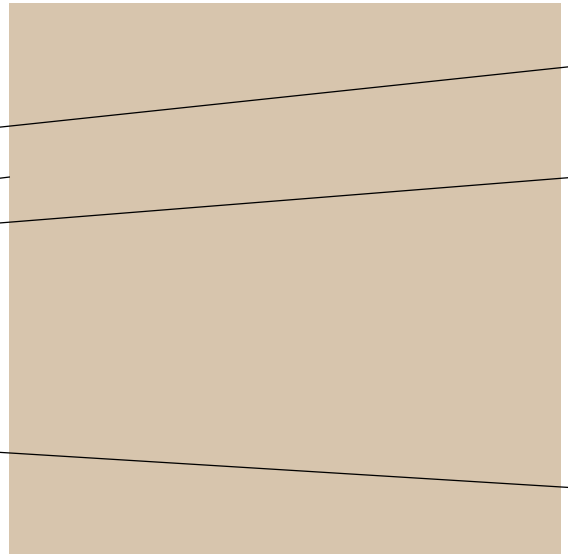

KILIM BEIGE SW6106
MAIN WALLS (BODY)

CONNECTED GRAY
SW6165
(TRIM)

BRONZE
WINDOWS, (ALL DOORS
PAINT COLOR
MATCHED TO FINAL
BRONZE PAINTED
WINDOWS)

CEDAR ACCENTS - CEDAR BARK
SW3511 SEMI-TRANSPARENT
STAIN
(PORCH COLUMNS, BEAMS)

ZIGA ARCHITECTURE STUDIO
Architecture | Interiors | Historic Preservation

# 313 N PINE-LOT 8 Exterior Paint Color Scheme
# BUILDING 2

ASPHALT SHINGLE ROOF, DARK BROWN

CONNECTED GRAY SW6165 (BODY)

CEDAR ACCENTS - CEDAR BARK SW3511 SEMI-TRANSPARENT STAIN (CEDAR SHAKE ACCENT AT GABLE)

KILIM BEIGE SW6106 MAIN WALLS (TRIM)

BRONZE WINDOWS, (ALL DOORS PAINT COLOR MATCHED TO FINAL BRONZE PAINTED WINDOWS)

ZIGA ARCHITECTURE STUDIO
Architecture | Interiors | Historic Preservation

# NEW RESIDENCE

## 313 N PINE ST - LOT 8, BUILDING 1, SAN ANTONIO, TX 78202

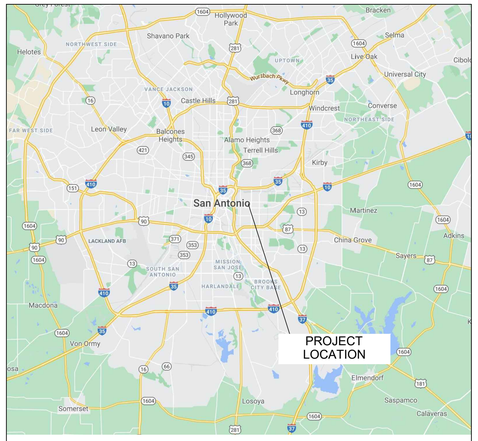


SITE LOCATION MAP #1

NOT TO SCALE

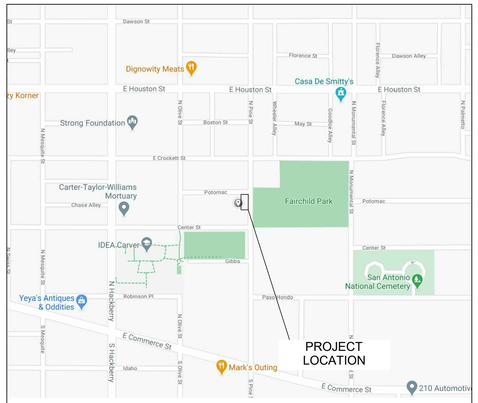


SITE LOCATION MAP #2

NOT TO SCALE

# GENERAL NOTES

1. THE CONTRACT DOCUMENTS ARE COMPLIMENTARY, AND WHAT IS REQUIRED BY ONE, ARCHITECTURAL, CIVIL, STRUCTURAL, MECHANICAL, PLUMBING, OR ELECTRICAL DRAWINGS OR SPECIFICATIONS, ADDENDUM, BULLETIN, OR OTHER DOCUMENT, SHALL BE AS BINDING AS IF REQUIRED BY ALL. CONTRACTOR SHALL USE ONLY COMPLETE SETS OF CONTRACT DOCUMENTS FOR EACH AND EVERY ITEM OF WORK.

2. CONTRACTOR AGREES THAT, IN ACCORDANCE WITH GENERALLY ACCEPTED CONSTRUCTION PRACTICES, CONTRACTOR SHALL BE REQUIRED TO ASSUME SOLE AND COMPLETE RESPONSIBILITY FOR JOB SITE CONDITIONS DURING THE COURSE OF CONSTRUCTION OF THE PROJECT, INCLUDING SAFETY OF ALL PERSONS AND PROPERTY, THAT THIS REQUIREMENT SHALL BE MADE TO APPLY CONTINUOUSLY AND NOT BE LIMITED TO NORMAL WORKING HOURS. CONTRACTOR FURTHER AGREES TO DEFEND, INDEMNIFY, AND HOLD DESIGN PROFESSIONAL HARMLESS FROM ANY AND ALL LIABILITY, REAL OR ALLEGED, IN CONNECTION WITH THE PERFORMANCE OF WORK ON THIS PROJECT.

3. ALL WORK SHALL COMPLY WITH ALL APPLICABLE CODE, ORDINANCES, A.D.A. T.A.S., AND REGULATIONS OF ALL GOVERNING BODIES.

4. ALL WORK SHALL BE DONE IN ACCORDANCE WITH THE APPLICABLE CODES, ORDINANCES AND STANDARD SPECIFICATIONS OF ALL AGENCIES THAT HAVE THE RESPONSIBILITY OF REVIEWING PLANS AND SPECIFICATIONS FOR CONSTRUCTION OF ALL ITEMS PER THESE PLANS AND SPECIFICATIONS IN THIS LOCALITY.

5. THE CONTRACTOR SHALL OBTAIN ALL THE NECESSARY PERMITS AS REQUIRED FOR CONSTRUCTION OF THIS PROJECT.

6. WHEN ANY EXISTING UTILITY REQUIRES ADJUSTMENT OR RELOCATION, THE CONTRACTOR SHALL NOTIFY THE PROPER UTILITY AND COORDINATE HIS WORK ACCORDINGLY. THERE SHALL BE NO CLAIM MADE BY THE CONTRACTOR AND ANY COSTS CAUSED BY DELAYS IN CONSTRUCTION DUE TO THE ADJUSTMENT OR RELOCATION OF UTILITIES.

7. ALL TRAFFIC CONTROLS ON THIS PROJECT SHALL ADHERE TO THE LATEST EDITION OF THE MANUAL ON UNIFORM TRAFFIC CONTROL DEVICES (MUTCD).

8. THE OWNER SHALL NOT BE HELD LIABLE FOR ANY CLAIMS RESULTING FROM ACCIDENTS OR DAMAGES CAUSED BY THE CONTRACTOR'S FAILURE TO COMPLY WITH TRAFFIC AND PUBLIC SAFETY REGULATIONS DURING THE CONSTRUCTION PERIOD.

9. THE CONTRACTOR SHALL CONFINE HIS ACTIVITIES TO THE PROJECT SITE UNDER DEVELOPMENT OR THE EXISTING RIGHT-OF-WAYS, CONSTRUCTION AND PERMANENT EASEMENTS, AND SHALL NOT TRESPASS UPON OTHER PRIVATE PROPERTY WITHOUT THE CONSENT OF THE OWNER OF THE OTHER PROPERTY.

10. THE CONTRACTOR SHALL DISPOSE OF ALL SURPLUS EXCAVATION PROPERLY AND PROVIDE ALL SUITABLE FILL MATERIAL AS APPROVED BY THE SOILS ENGINEER, AND THE COST SHALL BE INCLUDED IN THE PRICE BID FOR THE RELATED ITEMS.

11. EROSION AND SEDIMENT CONTROL SHALL BE PROVIDED IN ACCORDANCE WITH LOCAL AND/OR STATE REQUIREMENTS. PROTECTIVE MEASURES SHALL BE TAKEN BY THE CONTRACTOR TO PROTECT ADJACENT PROPERTY AT ALL TIMES DURING CONSTRUCTION. PROTECTIVE MEASURES SHALL BE TAKEN BY THE CONTRACTOR SO AS NOT TO CAUSE ANY MUD, SILT OR DEBRIS ONTO PUBLIC OR ADJACENT PROPERTY. ANY MUD OR DEBRIS ON PUBLIC PROPERTY SHALL BE REMOVED IMMEDIATELY.

12. ALL WORK SHALL BE GUARANTEED BY THE CONTRACTOR TO BE FREE FROM DEFECTS IN WORKMANSHIP AND MATERIALS AND IN CONFORMANCE WITH THE APPROVED PLANS AND SPECIFICATIONS, AND THAT THE CONTRACTOR SHALL REPLACE OR REPAIR ANY WORK OR MATERIAL FOUND TO BE DEFECTIVE.

13. CONTRACTOR SHALL VERIFY THAT THE PLANS AND SPECIFICATIONS THAT HE IS USING ARE THE VERY LATEST PLANS AND SPECIFICATIONS AND FURTHER SHALL VERIFY THAT THESE PLANS AND SPECIFICATIONS HAVE BEEN APPROVED BY ALL APPLICABLE PERMIT-ISSUING AGENCIES.

14. SHOULD THE CONTRACTOR ENCOUNTER CONFLICT BETWEEN THESE PLANS AND SPECIFICATIONS, EITHER AMONG THEMSELVES OR WITH THE REQUIREMENTS OF ANY AND ALL REVIEWING AND PERMIT-ISSUING AGENCIES, HE SHALL SEEK CLARIFICATION IN WRITING FROM THE ARCHITECT BEFORE COMMENCEMENT OF CONSTRUCTION. FAILURE TO DO SO SHALL BE AT SOLE EXPENSE TO THE CONTRACTOR.

15. THE CONTRACTOR IS REQUIRED TO TAKE DUE PRECAUTIONARY MEASURES TO PROTECT THE UTILITIES OR STRUCTURES AT THE SITE. IT SHALL BE THE CONTRACTOR'S RESPONSIBILITY TO NOTIFY THE OWNER OF UTILITIES OR STRUCTURES CONCERNED BEFORE STARTING WORK. THE CONTRACTOR SHALL NOTIFY THE PROPER UTILITY IMMEDIATELY UPON BREAK OR DAMAGE TO ANY UTILITY LINE OR APPURTENANCE, OR THE INTERRUPTION OF THEIR SERVICE. HE SHALL NOTIFY THE PROPER UTILITY INVOLVED, IF EXISTING UTILITY CONSTRUCTION CONFLICTS WITH REQUIREMENTS, THE CONTRACTOR SHALL NOTIFY THE ENGINEER SO THAT THE CONFLICT MAY BE RESOLVED.

16. INSTALL ALL MANUFACTURED ITEMS, MATERIALS, AND EQUIPMENT IN STRICT ACCORDANCE WITH MANUFACTURER'S WRITTEN INSTRUCTIONS, EXCEPT THAT THE SPECIFICATIONS, WHERE MORE STRINGENT, SHALL GOVERN.

17. THE CONTRACTOR SHALL BE RESPONSIBLE FOR PROVIDING ALL TAPS, EXTENSIONS, WATER, AND ELECTRICITY FOR ALL PROJECT FUNCTIONS, OFFICE, STORAGE, ETC.

18. THE CONTRACTOR SHALL BE RESPONSIBLE FOR PROVIDING HIS OWN TELEPHONE, TOILET, VALVES, OR OTHER DEVICES NECESSARY TO RUN POWER TOOLS AND EQUIPMENT. SUCH MODIFICATIONS TO EXISTING UTILITIES SHALL BE REMOVED AT COMPLETION OF THE PROJECT.

19. CONTRACTOR SHALL SUBMIT SHOP DRAWINGS TO THE ARCHITECT IN A TIMELY MANNER THAT WILL ALLOW NOT LESS THAN 10 DAYS FOR REVIEW. THE GENERAL CONTRACTOR SHALL SUBMIT CORRECT NUMBER REQUIRED, BUT NOT LESS THAN 4 COPIES.

20. THE GENERAL CONTRACTOR SHALL PROVIDE STREET NUMBERING ON THE BUILDING IN COMPLIANCE WITH LOCAL AUTHORITY.

21. ALL PENETRATIONS THRU WALLS SHALL BE SEALED AIR/WATER TIGHT AND CAULKED WITH 2 PART SEALANT EACH SIDE.

22. THE GENERAL CONTRACTOR SHALL PROVIDE (1) COPY OF AS-BUILT DRAWINGS TO THE OWNER AT THE COMPLETION OF THE PROJECT. AS-BUILT DRAWINGS SHALL BE KEPT ON THE JOB AT ALL TIMES AND UPDATED THROUGHOUT THE CONSTRUCTION PHASE.

23. UNLESS NOTED OTHERWISE, SITE PLAN DIMENSIONS ARE TO FACE OF CURB. FLOOR PLAN DIMENSIONS ARE TO FACE OF STUDS, FRAMING, MASONRY, CONCRETE WALL PANELS, OR FOUNDATION WALLS.

# SHEET INDEX



# ARCHITECT


ZIGA ARCHITECTURE STUDIO, PLLC

11723 WHISPER VALLEY ST, SAN ANTONIO, TX 78230 | 210-201-3637

1700 S LAMAR BLVD, STE 338, AUSTIN, TX 78704 | 512-522-5505

INFO@STUDIOZIGA.COM | WWW.STUDIOZIGA.COM


# CODE INFORMATION

2018 INTERNATIONAL RESIDENTIAL CODE
2018 IECC

# BUILDING DATA

SQ. FT.

| | |
|---|---|
| 671 S.F. | 1ST FLOOR LIVING |
| 750 S.F. | 2ND FLOOR LIVING |
| 1,421 S.F. | TOTAL LIVING |
| 154 S.F. | 1ST FLOOR PORCH |
| 75 S.F. | 2ND FLOOR PORCH |
| 229 S.F. | TOTAL PORCH |


ZIGA ARCHITECTURE STUDIO
Architecture | Interiors | Historic Preservation

11723 WHISPER VALLEY ST
SAN ANTONIO, TX 78230
TEL. 210.201.3637

1700 S LAMAR BLVD, STE 338
AUSTIN, TX 78704
TEL. 512.522.5505

eMAIL INFO@STUDIOZIGA.COM
WWW.STUDIOZIGA.COM


NEW RESIDENCE
313 N. PINE ST. - LOT 8, BUILDING 1
SAN ANTONIO, TX 78202
HENNEKE FINANCIAL GROUP, LLC

DRAWING FOR REVIEW ONLY. NOT FOR CONSTRUCTION, PERMITTING OR REGULATORY APPROVAL



ISSUE

| # | DATE | DESCRIPTION |
|---|---|---|
| 1 | 10/02/2020 | HDRC FINAL |
| 2 | 10/15/2020 | HDRC FINAL REV. |
| 3 | 10/29/2020 | HDRC FINAL 2 REV. |

COVER SHEET

| | |
|---|---|
| PROJECT NO. | 20-136 |
| DATE: | 10-29-20 |
| DRAWN BY: | FJZ |
| REVIEWED BY: | FJZ |

PROJECT ARCHITECT:
FELIX J. ZIGA JR., AIA
TEXAS LICENSE NO. 24683

CS

SUBJECT TO THE FOLLOWING RECORDED RESTRICTIVE COVENANTS AND/OR EASEMENTS ACCORDING TO SCHEDULE B OF TITLE COMMITMENT ISSUED BY EXCEL TITLE GROUP, LLC ISSUED JULY 10, 2020, G.F. NO. 20-0007701SART:
VOL. 11893 PAGE 1829 _____ RECORDS

NOTES:
1. ONLY VISIBLE IMPROVEMENTS SHOWN HEREON. CALL 811 FOR UTILITY LOCATES PRIOR TO ANY DIGGING OR CONSTRUCTION.
2. BASIS OF BEARINGS: TEXAS STATE PLANE COORDINATE SYSTEM - SOUTH CENTRAL ZONE (NAD 83) (CORS).
3. PROPERTY OWNER(S) AND/OR BUILDER(S) SHALL REVIEW MUNICIPAL/CITY, NEIGHBORHOOD AND RECORD RESTRICTIONS AND SETBACK LINE REQUIREMENTS AND SHALL OBTAIN PERMITS/APPROVALS PRIOR TO ANY CONSTRUCTION.
4. SIGNIFICANT, PROTECTED AND HERITAGE TREES LOCATED PER THE CITY OF SAN ANTONIO 2010 TREE ORDINANCE.

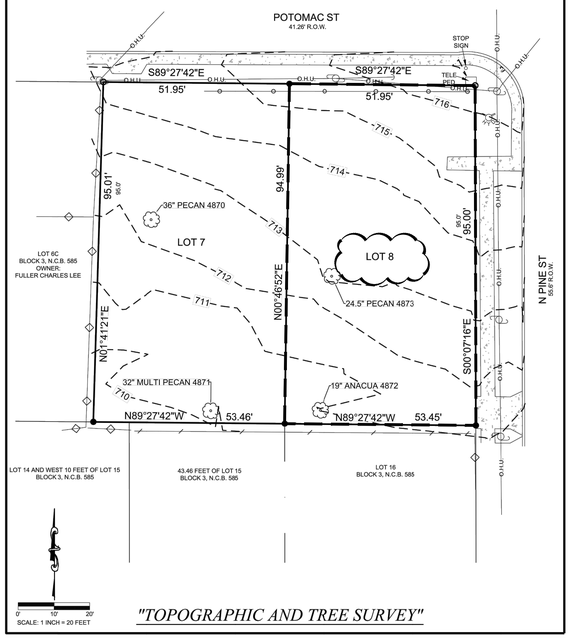


"TOPOGRAPHIC AND TREE SURVEY"

**SURVEY OF:** LOTS 7 AND 9, BLOCK 3, NEW CITY BLOCK 585, IN THE CITY OF SAN ANTONIO, BEXAR COUNTY, TEXAS.

ADDRESS 313 N PINE ST, SAN ANTONIO,TX 78202
JOB NO. 894-763
CERTIFIED TO: HENNEKE FINANCIAL GROUP, LLC

*Legend:*

RECORD INFORMATION N89°27'41"E 65.00'
AS MEASURED IN FIELD S33°29'20"W 161.24'
SMOOTH WIRE FENCE
CHAIN LINK FENCE
WOOD FENCE
CONCRETE
1/2" IRON ROD FOUND (UNLESS OTHERWISE NOTED)
FIRE HYDRANT
UTILITY POLE
O.H.U. OVERHEAD UTILITY (VOLUME/PAGE)
W - WATER METER
1/2" IRON ROD SET WITH CAP MARKED "MBC ENGINEERS"

MACINA • BOSE • COPELAND & ASSOC., INC.
CONSULTING ENGINEERS AND LAND SURVEYORS
1035 Central Parkway North, San Antonio, Texas 78232
(210) 545-1122 Fax (210) 545-9002 www.mbcengineers.com
FIRM REGISTRATION NUMBER: T.B.P.E. F-784 & T.B.P.L.S. 10011700

I, A REGISTERED PROFESSIONAL LAND SURVEYOR IN THE STATE OF TEXAS, DO HEREBY CERTIFY THAT THE ABOVE SURVEY PLAT IS A TRUE AND CORRECT REPRESENTATION OF THE PROPERTY HEREON DESCRIBED ACCORDING TO MEASUREMENTS MADE ON THE GROUND, AND THAT THIS SURVEY ACCURATELY DEPICTS THE SUBSTANTIAL VISIBLE IMPROVEMENTS TO SAID PROPERTY. IT IS UNDERSTOOD THAT A FORMAL CERTIFICATION IS BEING MADE BY A COMPANY SPECIALIZING IN THE PROCEDURE OF PROVIDING FLOOD CERTIFICATIONS AND THIS SURVEY MAKES NO REFERENCE TO FLOOD INFORMATION.

STATE OF TEXAS REGISTERED JOEL CHRISTAN JOHNSON 5578 PROFESSIONAL LAND SURVEYOR

JOEL CHRISTAN JOHNSON, R.P.L.S.
SEPTEMBER 29, 2020
DATE:
©2020

## 1 SURVEY
SCALE: AS NOTED

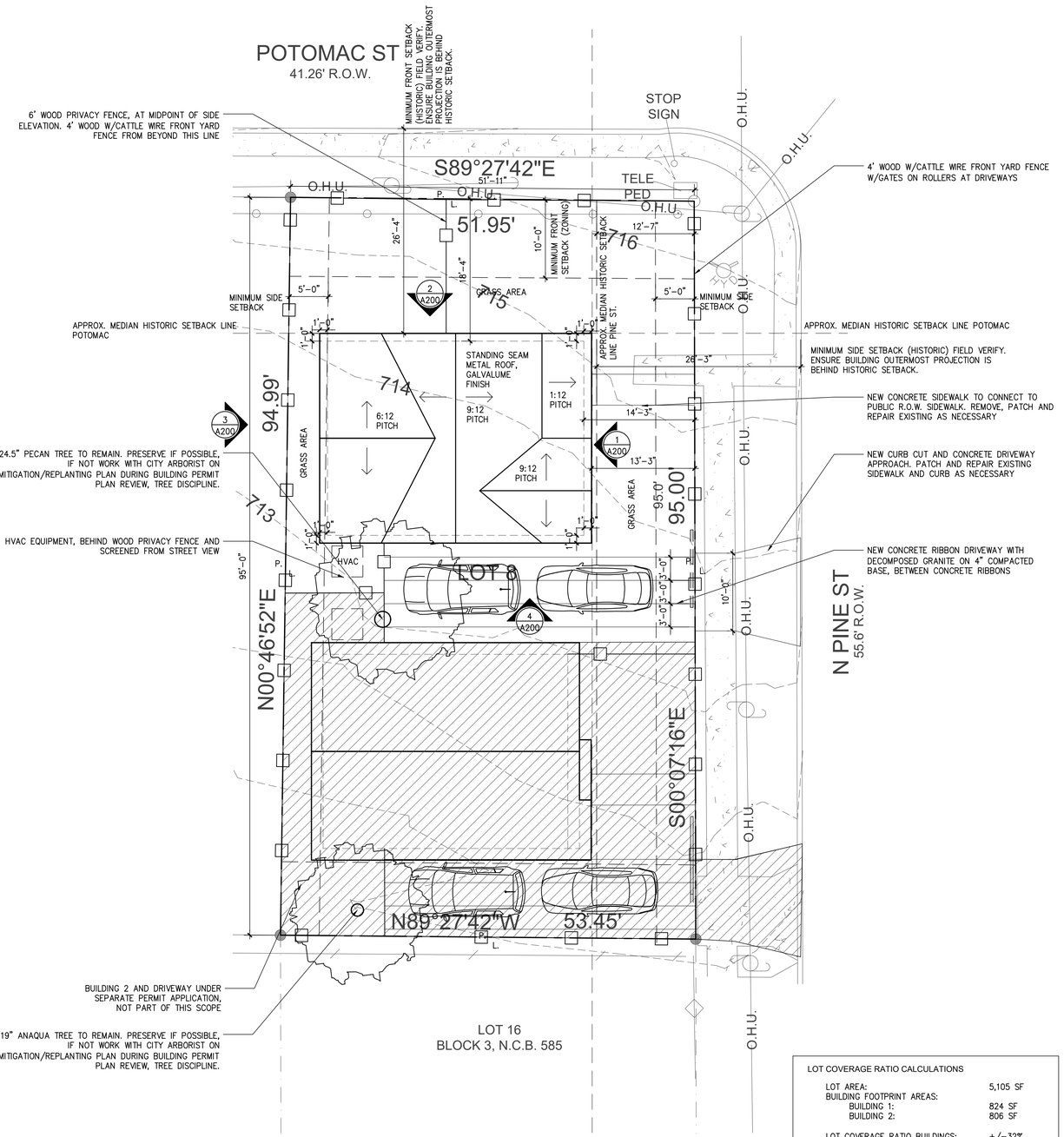


LOT COVERAGE RATIO CALCULATIONS

| | |
|---|---|
| LOT AREA: | 5,105 SF |
| BUILDING FOOTPRINT AREAS: | |
| BUILDING 1: | 824 SF |
| BUILDING 2: | 806 SF |
| LOT COVERAGE RATIO BUILDINGS: | +/-32% |
| DRIVEWAY/SIDEWALK IMPERVIOUS AREA: | |
| BUILDING 1: | 302 SF |
| BUILDING 2: | 300 SF |
| LOT COVERAGE RATIO IMPERVIOUS: | +/-44% |

## 2 PROPOSED SITE PLAN
SCALE: 1/8"=1'=0"

PLAN NORTH
TRUE NORTH


ZIGA ARCHITECTURE STUDIO
Architecture | Interiors | Historic Preservation

11723 WHISPER VALLEY ST
SAN ANTONIO, TX 78230
TEL. 210.201.3637

1700 S LAMAR BLVD, STE 338
AUSTIN, TX 78704
TEL. 512.522.5505

eMAIL INFO@STUDIOZIGA.COM
WWW.STUDIOZIGA.COM


NEW RESIDENCE
313 N. PINE ST. - LOT 8, BUILDING 1
SAN ANTONIO, TX 78202
HENNEKE FINANCIAL GROUP, LLC

DRAWING FOR REVIEW ONLY. NOT FOR CONSTRUCTION, PERMITTING OR REGULATORY APPROVAL



ISSUE

| # | DATE | DESCRIPTION |
|---|---|---|
| 1 | 10/02/2020 | HDRC FINAL |
| 2 | 10/15/2020 | HDRC FINAL REV. |
| 3 | 10/29/2020 | HDRC FINAL 2 REV. |

PROPOSED SITE/ROOF PLAN

| | |
|---|---|
| PROJECT NO. | 20-136 |
| DATE: | 10-29-20 |
| DRAWN BY: | FJZ |
| REVIEWED BY: | FJZ |

PROJECT ARCHITECT:
FELIX J. ZIGA JR., AIA
TEXAS LICENSE NO. 24683

SP100

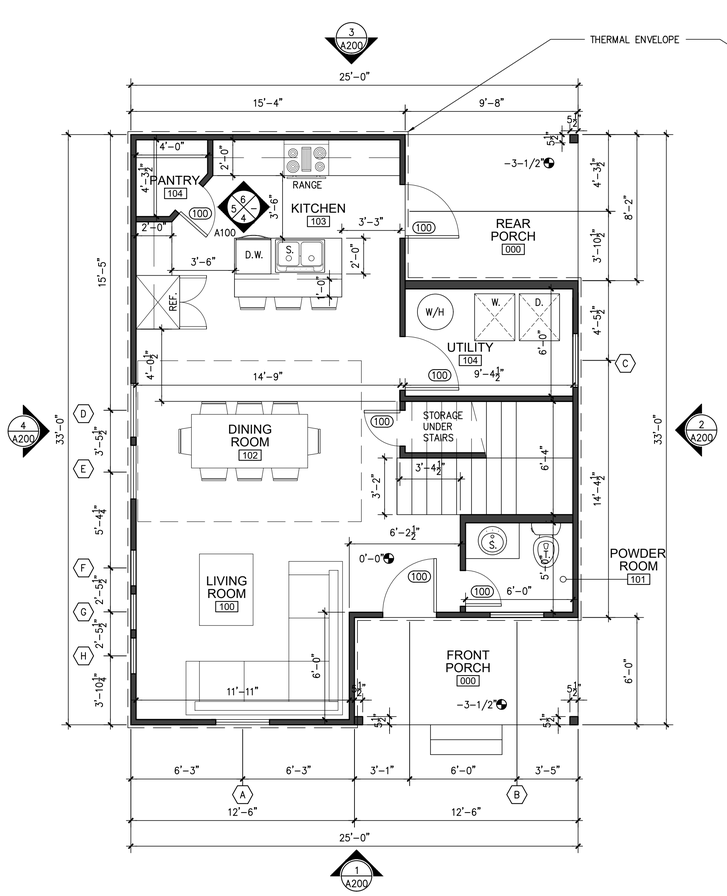


## 1 PROPOSED FIRST FLOOR PLAN

SCALE: 1/4"=1'-0"

PLAN NORTH

TRUE NORTH

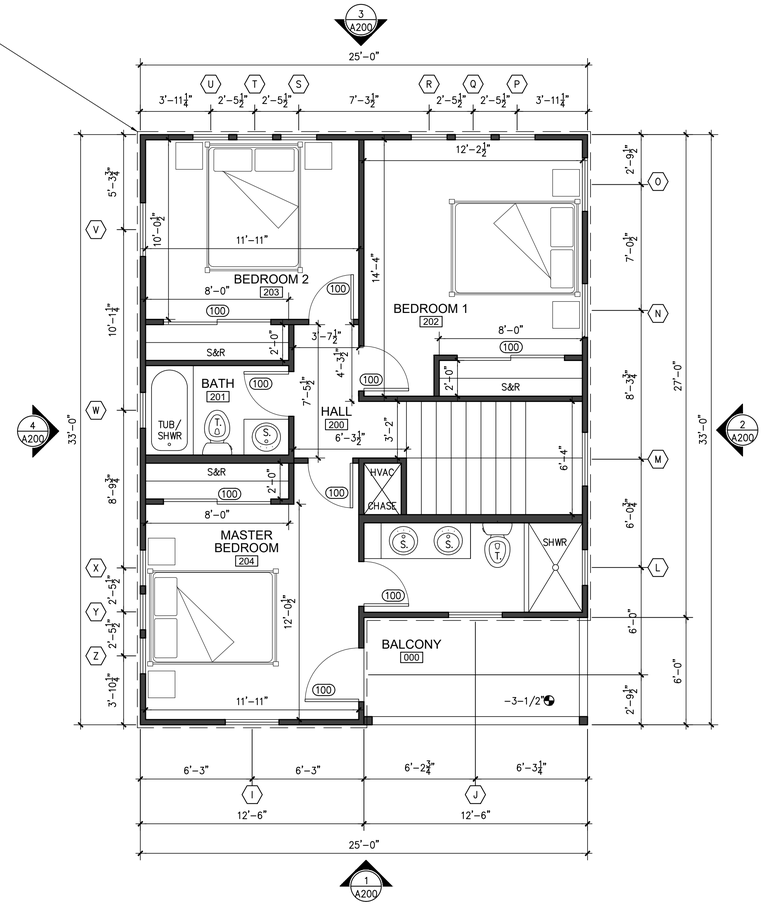


## 2 PROPOSED SECOND FLOOR PLAN

SCALE: 1/4"=1'-0"

PLAN NORTH

TRUE NORTH

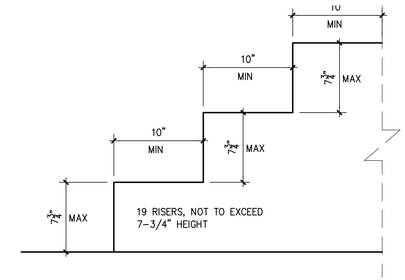


## 3 STAIR DIMENSION CONTROL DETAIL

SCALE: 1 1/2"=1'-0"

STAIR NOTE:

"Stair nosings shall comply with the following: R311.7.5.3 Nosings. The radius of curvature at the nosing shall be not greater than 9/16 inch. A nosing projection not less than ¾ inch and not more than 1-1/4 inches shall be provided on stairways with solid risers. The greatest nosing projection shall not exceed the smallest nosing projection by more than 3/8 inch between two stories, including the nosing at the level of floors and landings. Beveling of nosings shall not exceed ½ inch.

Exception: A nosing projection is not required where the tread depth is not less than 11 inches."

INTERIOR ELEVATIONS

PENDING – NOT DRAWN YET

ZIGA ARCHITECTURE STUDIO
Architecture | Interiors | Historic Preservation

11723 WHISPER VALLEY ST
SAN ANTONIO, TX 78230
TEL. 210.201.3637

1700 S LAMAR BLVD, STE 338
AUSTIN, TX 78704
TEL. 512.522.5505

eMAIL INFO@STUDIOZIGA.COM
WWW.STUDIOZIGA.COM

NEW RESIDENCE

313 N. PINE ST. - LOT 8, BUILDING 1
SAN ANTONIO, TX 78202

HENNEKE FINANCIAL GROUP, LLC

DRAWING FOR REVIEW ONLY. NOT FOR CONSTRUCTION, PERMITTING OR REGULATORY APPROVAL



ISSUE

| # | DATE | DESCRIPTION |
|---|---|---|
| 1 | 10/02/2020 | HDRC FINAL |
| 2 | 10/15/2020 | HDRC FINAL REV. |
| 3 | 10/29/2020 | HDRC FINAL 2 REV. |

PROPOSED FLOOR PLANS

| | |
|---|---|
| PROJECT NO. | 20-136 |
| DATE: | 10-29-20 |
| DRAWN BY: | FJZ |
| REVIEWED BY: | FJZ |

PROJECT ARCHITECT:
FELIX J. ZIGA JR., AIA
TEXAS LICENSE NO. 24683

A100

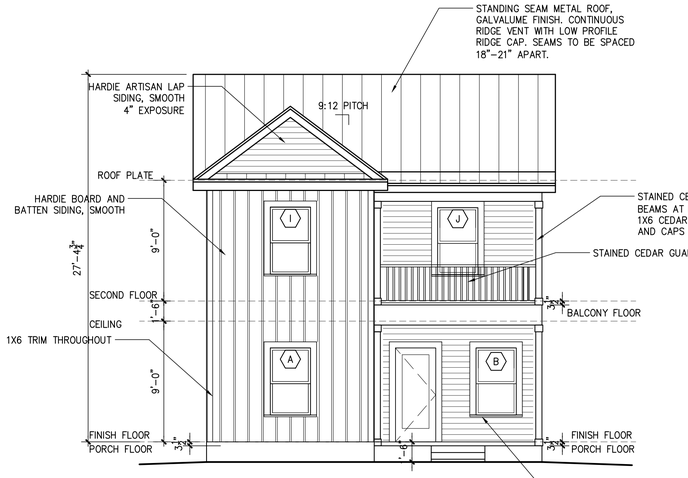


1 EAST ELEVATION

SCALE: 3/16"=1'=0"

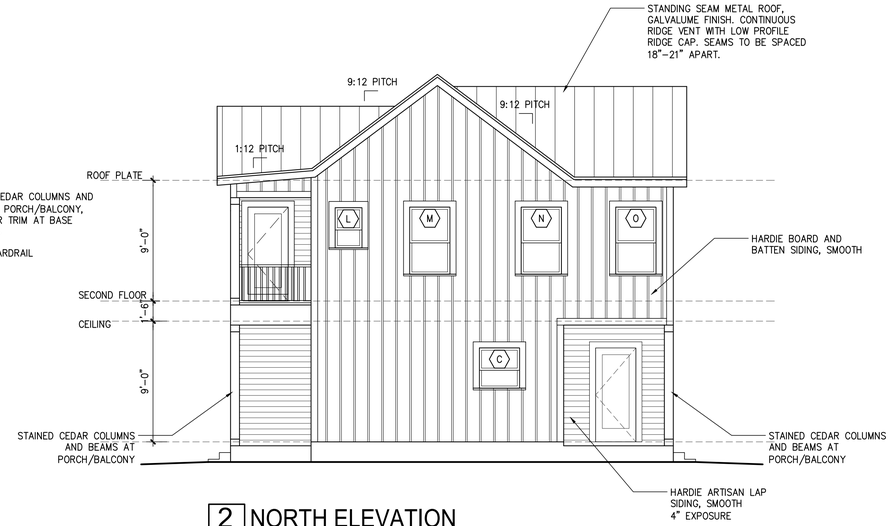


2 NORTH ELEVATION

SCALE: 3/16"=1'=0"

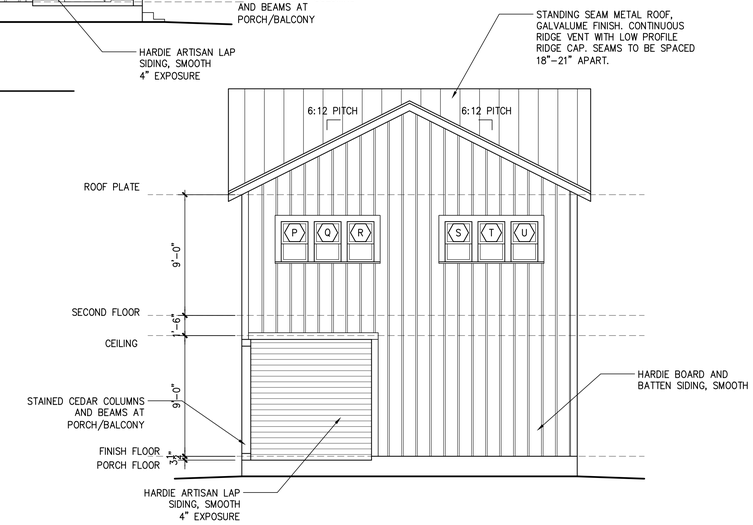


3 WEST ELEVATION

SCALE: 3/16"=1'=0"

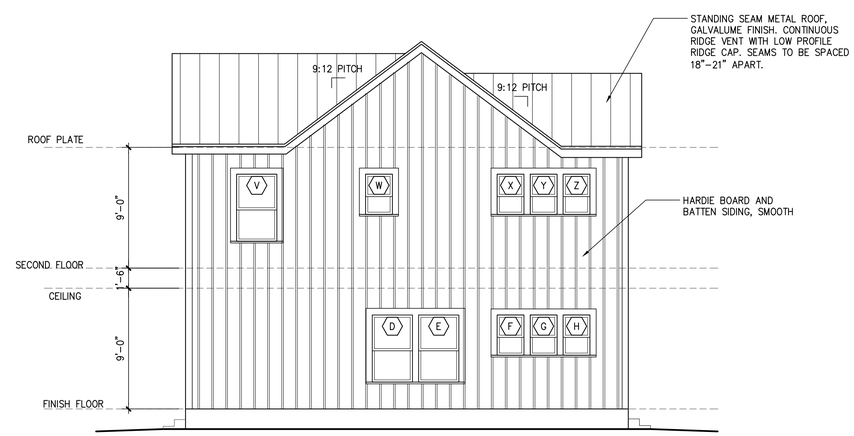


4 SOUTH ELEVATION

SCALE: 3/16"=1'=0"

**TABLE R402.4.1.1**
**AIR BARRIER AND INSULATION INSTALLATION**

| COMPONENT | AIR BARRIER CRITERIA | INSULATION INSTALLATION CRITERIA |
|---|---|---|
| General requirements | A continuous air barrier shall be installed in the building envelope.<br>The exterior thermal envelope contains a continuous air barrier.<br>Breaks or joints in the air barrier shall be sealed. | Air-permeable insulation shall not be used as a sealing material. |
| Ceiling/attic | The air barrier in any dropped ceiling/soffit shall be aligned with the insulation and any gaps in the air barrier shall be sealed.<br>Access openings, drop down stairs or knee wall doors to unconditioned attic spaces shall be sealed. | The insulation in any dropped ceiling/soffit shall be aligned with the air barrier. |
| Walls | The junction of the foundation and sill plate shall be sealed.<br>The junction of the top plate and the top of exterior walls shall be sealed.<br>Knee walls shall be sealed. | Cavities within corners and headers of frame walls shall be insulated by completely filling the cavity with a material having a thermal resistance of R-3 per inch minimum.<br>Exterior thermal envelope insulation for framed walls shall be installed in substantial contact and continuous alignment with the air barrier. |
| Windows, skylights and doors | The space between window/door jambs and framing, and skylights and framing shall be sealed. | |
| Rim joists | Rim joists shall include the air barrier. | Rim joists shall be insulated. |
| Floors (including above garage and cantilevered floors) | The air barrier shall be installed at any exposed edge of insulation. | Floor framing cavity insulation shall be installed to maintain permanent contact with the underside of subfloor decking, or floor framing cavity insulation shall be permitted to be in contact with the top side of sheathing, or continuous insulation<br>installed on the underside of floor framing and extends from the bottom to the top of all perimeter floor framing members. |
| Crawl space walls | Exposed earth in unvented crawl spaces shall be covered with a Class I vapor retarder with overlapping joints taped. | Where provided instead of floor insulation, insulation shall be permanently attached to the crawlspace walls. |
| Shafts, penetrations | Duct shafts, utility penetrations, and flue shafts opening to exterior or unconditioned space shall be sealed. | |
| Narrow cavities | | Batts in narrow cavities shall be cut to fit, or narrow cavities shall be filled by insulation that on installation readily conforms to the available cavity space. |
| Garage separation | Air sealing shall be provided between the garage and conditioned spaces. | |
| Recessed lighting | Recessed light fixtures installed in the building thermal envelope shall be sealed to the drywall. | Recessed light fixtures installed in the building thermal envelope shall be air tight and IC rated. |
| Plumbing and wiring | | Batt insulation shall be cut neatly to fit around wiring and plumbing in exterior walls, or insulation that on installation readily conforms to available space shall extend behind piping and wiring. |
| Shower/tub on exterior wall | The air barrier installed at exterior walls adjacent to showers and tubs shall separate them from the showers and tubs. | Exterior walls adjacent to showers and tubs shall be insulated. |
| Electrical/phone box on exterior walls | The air barrier shall be installed behind electrical or communication boxes or air-sealed boxes shall be installed. | |
| HVAC register boots | HVAC register boots that penetrate building thermal envelope shall be sealed to the subfloor or drywall. | |
| Concealed sprinklers | When required to be sealed, concealed fire sprinklers shall only be sealed in a manner that is recommended by the manufacturer. Caulking or other adhesive sealants shall not be used to fill voids between fire sprinkler cover plates and walls or ceilings. | |

a. In addition, inspection of log walls shall be in accordance with the provisions of ICC-400.


ZIGA ARCHITECTURE STUDIO
Architecture | Interiors | Historic Preservation

11723 WHISPER VALLEY ST
SAN ANTONIO, TX 78230
TEL. 210.201.3637

1700 S LAMAR BLVD, STE 338
AUSTIN, TX 78704
TEL. 512.522.5505

eMAIL INFO@STUDIOZIGA.COM
WWW.STUDIOZIGA.COM


NEW RESIDENCE

313 N. PINE ST. - LOT 8, BUILDING 1
SAN ANTONIO, TX 78202

HENNEKE FINANCIAL GROUP, LLC

DRAWING FOR REVIEW ONLY. NOT FOR CONSTRUCTION, PERMITTING OR REGULATORY APPROVAL



ISSUE

| # | DATE | DESCRIPTION |
|---|---|---|
| 1 | 10/02/2020 | HDRC FINAL |
| 2 | 10/15/2020 | HDRC FINAL REV. |
| 3 | 10/29/2020 | HDRC FINAL 2 REV. |

PROPOSED EXTERIOR ELEVATIONS

| | |
|---|---|
| PROJECT NO. | 20-136 |
| DATE: | 10-29-20 |
| DRAWN BY: | FJZ |
| REVIEWED BY: | FJZ |

PROJECT ARCHITECT:
FELIX J. ZIGA JR., AIA
TEXAS LICENSE NO. 24683

A200

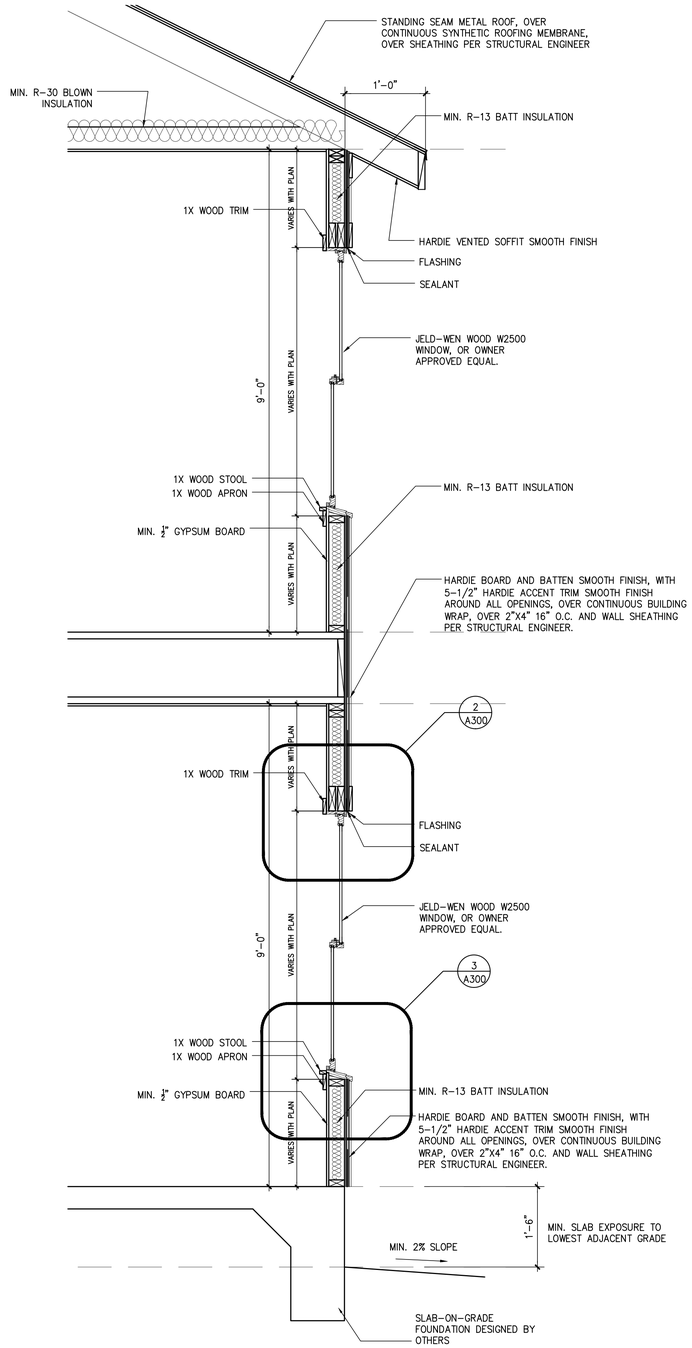


1 WALL SECTION

SCALE: 3/4"=1'-0"

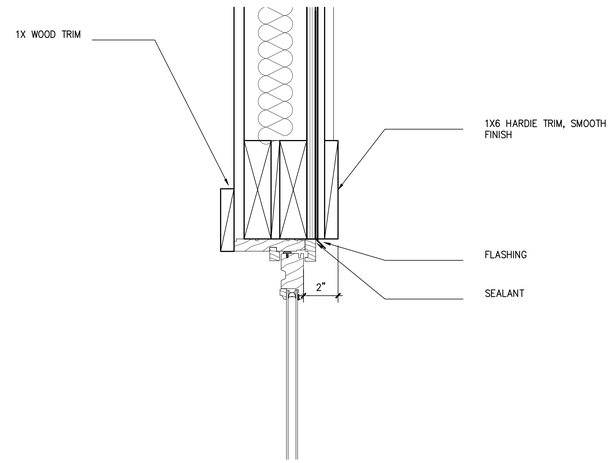


2 WINDOW HEAD DETAIL

SCALE: 3"=1'-0"

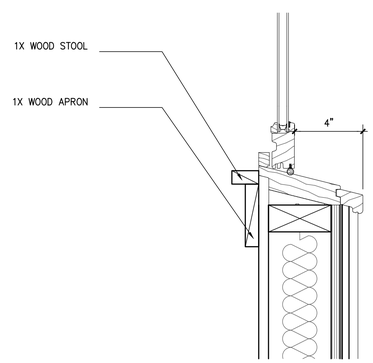


3 WINDOW SILL DETAIL

SCALE: 3"=1'-0"

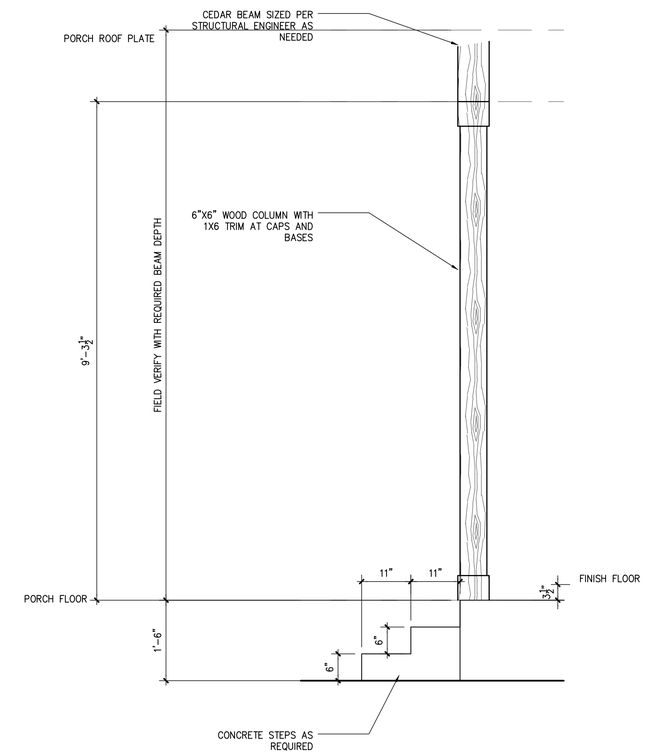


4 TYPICAL CEDAR COLUMN DETAIL

SCALE: 3/4"=1'-0"

ZIGA ARCHITECTURE STUDIO
Architecture | Interiors | Historic Preservation

11723 WHISPER VALLEY ST
SAN ANTONIO, TX 78230
TEL. 210.201.3637

1700 S LAMAR BLVD, STE 338
AUSTIN, TX 78704
TEL. 512.522.5505

eMAIL INFO@STUDIOZIGA.COM
WWW.STUDIOZIGA.COM

NEW RESIDENCE

313 N. PINE ST. - LOT 8, BUILDING 1
SAN ANTONIO, TX 78202

HENNEKE FINANCIAL GROUP, LLC

DRAWING FOR REVIEW ONLY. NOT FOR CONSTRUCTION, PERMITTING OR REGULATORY APPROVAL



ISSUE

| # | DATE | DESCRIPTION |
|---|---|---|
| 1 | 10/02/2020 | HDRC FINAL |
| 2 | 10/15/2020 | HDRC FINAL REV. |
| 3 | 10/29/2020 | HDRC FINAL 2 REV. |

WALL SECTION AND DETAILS

| | |
|---|---|
| PROJECT NO. | 20-136 |
| DATE: | 10-29-20 |
| DRAWN BY: | FJZ |
| REVIEWED BY: | FJZ |

PROJECT ARCHITECT:
FELIX J. ZIGA JR., AIA
TEXAS LICENSE NO. 24683

A300

# NEW RESIDENCE

## 313 N PINE ST - LOT 8, BUILDING 2, SAN ANTONIO, TX 78202

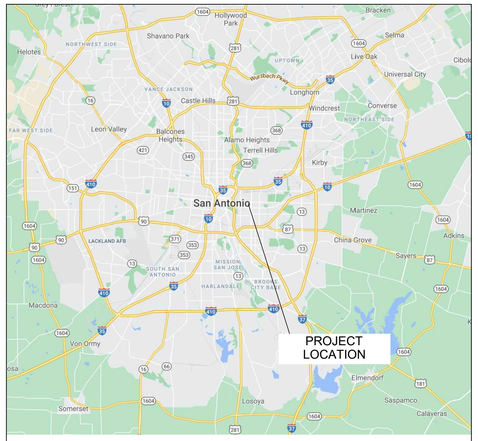


SITE LOCATION MAP #1

NOT TO SCALE

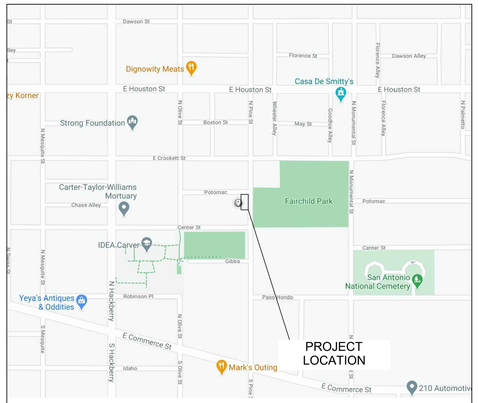


SITE LOCATION MAP #2

NOT TO SCALE

# GENERAL NOTES

1. THE CONTRACT DOCUMENTS ARE COMPLIMENTARY, AND WHAT IS REQUIRED BY ONE, ARCHITECTURAL, CIVIL, STRUCTURAL, MECHANICAL, PLUMBING, OR ELECTRICAL DRAWINGS OR SPECIFICATIONS, ADDENDUM, BULLETIN, OR OTHER DOCUMENT, SHALL BE AS BINDING AS IF REQUIRED BY ALL. CONTRACTOR SHALL USE ONLY COMPLETE SETS OF CONTRACT DOCUMENTS FOR EACH AND EVERY ITEM OF WORK.

2. CONTRACTOR AGREES THAT, IN ACCORDANCE WITH GENERALLY ACCEPTED CONSTRUCTION PRACTICES, CONTRACTOR SHALL BE REQUIRED TO ASSUME SOLE AND COMPLETE RESPONSIBILITY FOR JOB SITE CONDITIONS DURING THE COURSE OF CONSTRUCTION OF THE PROJECT, INCLUDING SAFETY OF ALL PERSONS AND PROPERTY, THAT THIS REQUIREMENT SHALL BE MADE TO APPLY CONTINUOUSLY AND NOT BE LIMITED TO NORMAL WORKING HOURS. CONTRACTOR FURTHER AGREES TO DEFEND, INDEMNIFY, AND HOLD DESIGN PROFESSIONAL HARMLESS FROM ANY AND ALL LIABILITY, REAL OR ALLEGED, IN CONNECTION WITH THE PERFORMANCE OF WORK ON THIS PROJECT.

3. ALL WORK SHALL COMPLY WITH ALL APPLICABLE CODE, ORDINANCES, A.D.A. T.A.S., AND REGULATIONS OF ALL GOVERNING BODIES.

4. ALL WORK SHALL BE DONE IN ACCORDANCE WITH THE APPLICABLE CODES, ORDINANCES AND STANDARD SPECIFICATIONS OF ALL AGENCIES THAT HAVE THE RESPONSIBILITY OF REVIEWING PLANS AND SPECIFICATIONS FOR CONSTRUCTION OF ALL ITEMS PER THESE PLANS AND SPECIFICATIONS IN THIS LOCALITY.

5. THE CONTRACTOR SHALL OBTAIN ALL THE NECESSARY PERMITS AS REQUIRED FOR CONSTRUCTION OF THIS PROJECT.

6. WHEN ANY EXISTING UTILITY REQUIRES ADJUSTMENT OR RELOCATION, THE CONTRACTOR SHALL NOTIFY THE PROPER UTILITY AND COORDINATE HIS WORK ACCORDINGLY. THERE SHALL BE NO CLAIM MADE BY THE CONTRACTOR AND ANY COSTS CAUSED BY DELAYS IN CONSTRUCTION DUE TO THE ADJUSTMENT OR RELOCATION OF UTILITIES.

7. ALL TRAFFIC CONTROLS ON THIS PROJECT SHALL ADHERE TO THE LATEST EDITION OF THE MANUAL ON UNIFORM TRAFFIC CONTROL DEVICES (MUTCD).

8. THE OWNER SHALL NOT BE HELD LIABLE FOR ANY CLAIMS RESULTING FROM ACCIDENTS OR DAMAGES CAUSED BY THE CONTRACTOR'S FAILURE TO COMPLY WITH TRAFFIC AND PUBLIC SAFETY REGULATIONS DURING THE CONSTRUCTION PERIOD.

9. THE CONTRACTOR SHALL CONFINE HIS ACTIVITIES TO THE PROJECT SITE UNDER DEVELOPMENT OR THE EXISTING RIGHT-OF-WAYS, CONSTRUCTION AND PERMANENT EASEMENTS, AND SHALL NOT TRESPASS UPON OTHER PRIVATE PROPERTY WITHOUT THE CONSENT OF THE OWNER OF THE OTHER PROPERTY.

10. THE CONTRACTOR SHALL DISPOSE OF ALL SURPLUS EXCAVATION PROPERLY AND PROVIDE ALL SUITABLE FILL MATERIAL AS APPROVED BY THE SOILS ENGINEER, AND THE COST SHALL BE INCLUDED IN THE PRICE BID FOR THE RELATED ITEMS.

11. EROSION AND SEDIMENT CONTROL SHALL BE PROVIDED IN ACCORDANCE WITH LOCAL AND/OR STATE REQUIREMENTS. PROTECTIVE MEASURES SHALL BE TAKEN BY THE CONTRACTOR TO PROTECT ADJACENT PROPERTY AT ALL TIMES DURING CONSTRUCTION. PROTECTIVE MEASURES SHALL BE TAKEN BY THE CONTRACTOR SO AS NOT TO CAUSE ANY MUD, SILT OR DEBRIS ONTO PUBLIC OR ADJACENT PROPERTY. ANY MUD OR DEBRIS ON PUBLIC PROPERTY SHALL BE REMOVED IMMEDIATELY.

12. ALL WORK SHALL BE GUARANTEED BY THE CONTRACTOR TO BE FREE FROM DEFECTS IN WORKMANSHIP AND MATERIALS AND IN CONFORMANCE WITH THE APPROVED PLANS AND SPECIFICATIONS, AND THAT THE CONTRACTOR SHALL REPLACE OR REPAIR ANY WORK OR MATERIAL FOUND TO BE DEFECTIVE.

13. CONTRACTOR SHALL VERIFY THAT THE PLANS AND SPECIFICATIONS THAT HE IS USING ARE THE VERY LATEST PLANS AND SPECIFICATIONS AND FURTHER SHALL VERIFY THAT THESE PLANS AND SPECIFICATIONS HAVE BEEN APPROVED BY ALL APPLICABLE PERMIT-ISSUING AGENCIES.

14. SHOULD THE CONTRACTOR ENCOUNTER CONFLICT BETWEEN THESE PLANS AND SPECIFICATIONS, EITHER AMONG THEMSELVES OR WITH THE REQUIREMENTS OF ANY AND ALL REVIEWING AND PERMIT-ISSUING AGENCIES, HE SHALL SEEK CLARIFICATION IN WRITING FROM THE ARCHITECT BEFORE COMMENCEMENT OF CONSTRUCTION. FAILURE TO DO SO SHALL BE AT SOLE EXPENSE TO THE CONTRACTOR.

15. THE CONTRACTOR IS REQUIRED TO TAKE DUE PRECAUTIONARY MEASURES TO PROTECT THE UTILITIES OR STRUCTURES AT THE SITE. IT SHALL BE THE CONTRACTOR'S RESPONSIBILITY TO NOTIFY THE OWNER OF UTILITIES OR STRUCTURES CONCERNED BEFORE STARTING WORK. THE CONTRACTOR SHALL NOTIFY THE PROPER UTILITY IMMEDIATELY UPON BREAK OR DAMAGE TO ANY UTILITY LINE OR APPURTENANCE, OR THE INTERRUPTION OF THEIR SERVICE. HE SHALL NOTIFY THE PROPER UTILITY INVOLVED, IF EXISTING UTILITY CONSTRUCTION CONFLICTS WITH REQUIREMENTS, THE CONTRACTOR SHALL NOTIFY THE ENGINEER SO THAT THE CONFLICT MAY BE RESOLVED.

16. INSTALL ALL MANUFACTURED ITEMS, MATERIALS, AND EQUIPMENT IN STRICT ACCORDANCE WITH MANUFACTURER'S WRITTEN INSTRUCTIONS, EXCEPT THAT THE SPECIFICATIONS, WHERE MORE STRINGENT, SHALL GOVERN.

17. THE CONTRACTOR SHALL BE RESPONSIBLE FOR PROVIDING ALL TAPS, EXTENSIONS, WATER, AND ELECTRICITY FOR ALL PROJECT FUNCTIONS, OFFICE, STORAGE, ETC.

18. THE CONTRACTOR SHALL BE RESPONSIBLE FOR PROVIDING HIS OWN TELEPHONE, TOILET, VALVES, OR OTHER DEVICES NECESSARY TO RUN POWER TOOLS AND EQUIPMENT. SUCH MODIFICATIONS TO EXISTING UTILITIES SHALL BE REMOVED AT COMPLETION OF THE PROJECT.

19. CONTRACTOR SHALL SUBMIT SHOP DRAWINGS TO THE ARCHITECT IN A TIMELY MANNER THAT WILL ALLOW NOT LESS THAN 10 DAYS FOR REVIEW. THE GENERAL CONTRACTOR SHALL SUBMIT CORRECT NUMBER REQUIRED, BUT NOT LESS THAN 4 COPIES.

20. THE GENERAL CONTRACTOR SHALL PROVIDE STREET NUMBERING ON THE BUILDING IN COMPLIANCE WITH LOCAL AUTHORITY.

21. ALL PENETRATIONS THRU WALLS SHALL BE SEALED AIR/WATER TIGHT AND CAULKED WITH 2 PART SEALANT EACH SIDE.

22. THE GENERAL CONTRACTOR SHALL PROVIDE (1) COPY OF AS-BUILT DRAWINGS TO THE OWNER AT THE COMPLETION OF THE PROJECT. AS-BUILT DRAWINGS SHALL BE KEPT ON THE JOB AT ALL TIMES AND UPDATED THROUGHOUT THE CONSTRUCTION PHASE.

23. UNLESS NOTED OTHERWISE, SITE PLAN DIMENSIONS ARE TO FACE OF CURB. FLOOR PLAN DIMENSIONS ARE TO FACE OF STUDS, FRAMING, MASONRY, CONCRETE WALL PANELS, OR FOUNDATION WALLS.

# SHEET INDEX



# ARCHITECT


ZIGA ARCHITECTURE STUDIO, PLLC

11723 WHISPER VALLEY ST, SAN ANTONIO, TX 78230 | 210-201-3637

1700 S LAMAR BLVD, STE 338, AUSTIN, TX 78704 | 512-522-5505

INFO@STUDIOZIGA.COM | WWW.STUDIOZIGA.COM


# CODE INFORMATION

2018 INTERNATIONAL RESIDENTIAL CODE
2018 IECC

# BUILDING DATA

SQ. FT.

| | |
|---|---|
| 648 S.F. | 1ST FLOOR LIVING |
| 713 S.F. | 2ND FLOOR LIVING |
| 1,361 S.F. | TOTAL LIVING |
| 158 S.F. | 1ST FLOOR PORCH |
| 94 S.F. | 2ND FLOOR PORCH |
| 252 S.F. | TOTAL PORCH |


ZIGA ARCHITECTURE STUDIO
Architecture | Interiors | Historic Preservation

11723 WHISPER VALLEY ST
SAN ANTONIO, TX 78230
TEL. 210.201.3637

1700 S LAMAR BLVD, STE 338
AUSTIN, TX 78704
TEL. 512.522.5505

eMAIL INFO@STUDIOZIGA.COM
WWW.STUDIOZIGA.COM


NEW RESIDENCE
313 N. PINE ST. - LOT 8, BUILDING 2
SAN ANTONIO, TX 78202
HENNEKE FINANCIAL GROUP, LLC

DRAWING FOR REVIEW ONLY. NOT FOR CONSTRUCTION, PERMITTING OR REGULATORY APPROVAL



ISSUE

| # | DATE | DESCRIPTION |
|---|---|---|
| 1 | 10/02/2020 | HDRC FINAL |
| 2 | 10/15/2020 | HDRC FINAL REV. |
| 3 | 10/29/2020 | HDRC FINAL 2 REV. |

COVER SHEET

| | |
|---|---|
| PROJECT NO. | 20-136 |
| DATE: | 10-29-20 |
| DRAWN BY: | FJZ |
| REVIEWED BY: | FJZ |

PROJECT ARCHITECT:
FELIX J. ZIGA JR., AIA
TEXAS LICENSE NO. 24683

CS

SUBJECT TO THE FOLLOWING RECORDED RESTRICTIVE COVENANTS AND/OR EASEMENTS ACCORDING TO SCHEDULE B OF TITLE COMMITMENT ISSUED BY EXCEL TITLE GROUP, LLC ISSUED JULY 10, 2020, G.F. NO. 20-0007701SART:
VOL. 11893 PAGE 1829 RECORDS

NOTES:
1. ONLY VISIBLE IMPROVEMENTS SHOWN HEREON. CALL 811 FOR UTILITY LOCATES PRIOR TO ANY DIGGING OR CONSTRUCTION.
2. BASIS OF BEARINGS: TEXAS STATE PLANE COORDINATE SYSTEM - SOUTH CENTRAL ZONE (NAD 83) (CORS).
3. PROPERTY OWNER(S) AND/OR BUILDER(S) SHALL REVIEW MUNICIPAL/CITY, NEIGHBORHOOD AND RECORD RESTRICTIONS AND SETBACK LINE REQUIREMENTS AND SHALL OBTAIN PERMITS/APPROVALS PRIOR TO ANY CONSTRUCTION.
4. SIGNIFICANT, PROTECTED AND HERITAGE TREES LOCATED PER THE CITY OF SAN ANTONIO 2010 TREE ORDINANCE.

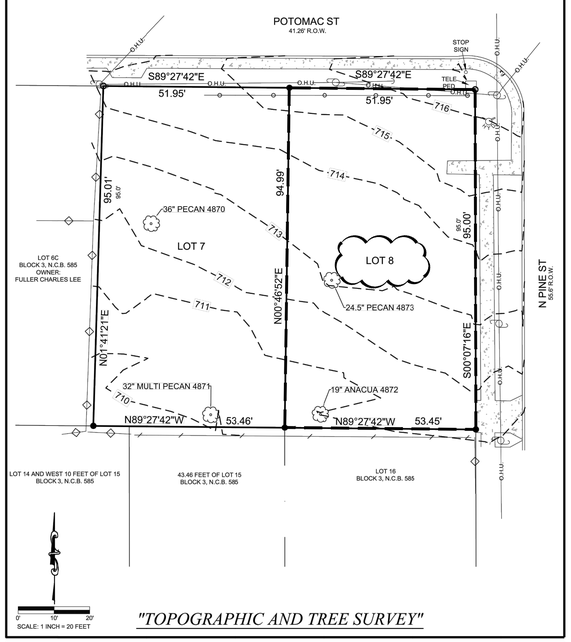


*"TOPOGRAPHIC AND TREE SURVEY"*

**SURVEY OF:** LOTS 7 AND 9, BLOCK 3, NEW CITY BLOCK 585, IN THE CITY OF SAN ANTONIO, BEXAR COUNTY, TEXAS.

ADDRESS 313 N PINE ST, SAN ANTONIO,TX 78202
JOB NO. 894-783
CERTIFIED TO: HENNEKE FINANCIAL GROUP, LLC

*Legend:*

RECORD INFORMATION N89°27'41"E 65.00'
AS MEASURED IN FIELD S33°29'20"W 161.24'

SMOOTH WIRE FENCE
CHAIN LINK FENCE
WOOD FENCE
CONCRETE
1/2" IRON ROD FOUND (UNLESS OTHERWISE NOTED)
FIRE HYDRANT
UTILITY POLE
O.H.U. OVERHEAD UTILITY
(VOLUME/PAGE)
W - WATER METER
1/2" IRON ROD SET WITH CAP MARKED "MBC ENGINEERS"

MACINA • BOSE • COPELAND & ASSOC., INC.
CONSULTING ENGINEERS AND LAND SURVEYORS
1035 Central Parkway North, San Antonio, Texas 78232
(210) 545-1122 Fax (210) 545-9002 www.mbcengineers.com
FIRM REGISTRATION NUMBER: T.B.P.E. F-784 & T.B.P.L.S. 10011700

I, A REGISTERED PROFESSIONAL LAND SURVEYOR IN THE STATE OF TEXAS, DO HEREBY CERTIFY THAT THE ABOVE SURVEY PLAT IS A TRUE AND CORRECT REPRESENTATION OF THE PROPERTY HEREON DESCRIBED ACCORDING TO MEASUREMENTS MADE ON THE GROUND, AND THAT THIS SURVEY ACCURATELY DEPICTS THE SUBSTANTIAL VISIBLE IMPROVEMENTS TO SAID PROPERTY. IT IS UNDERSTOOD THAT A FORMAL CERTIFICATION IS BEING MADE BY A COMPANY SPECIALIZING IN THE PROCEDURE OF PROVIDING FLOOD CERTIFICATIONS AND THIS SURVEY MAKES NO REFERENCE TO FLOOD INFORMATION.

STATE OF TEXAS REGISTERED JOEL CHRISTIAN JOHNSON 5578 PROFESSIONAL LAND SURVEYOR

JOEL CHRISTIAN JOHNSON, R.P.L.S.
SEPTEMBER 29, 2020
DATE:



1 SURVEY
SCALE: AS NOTED

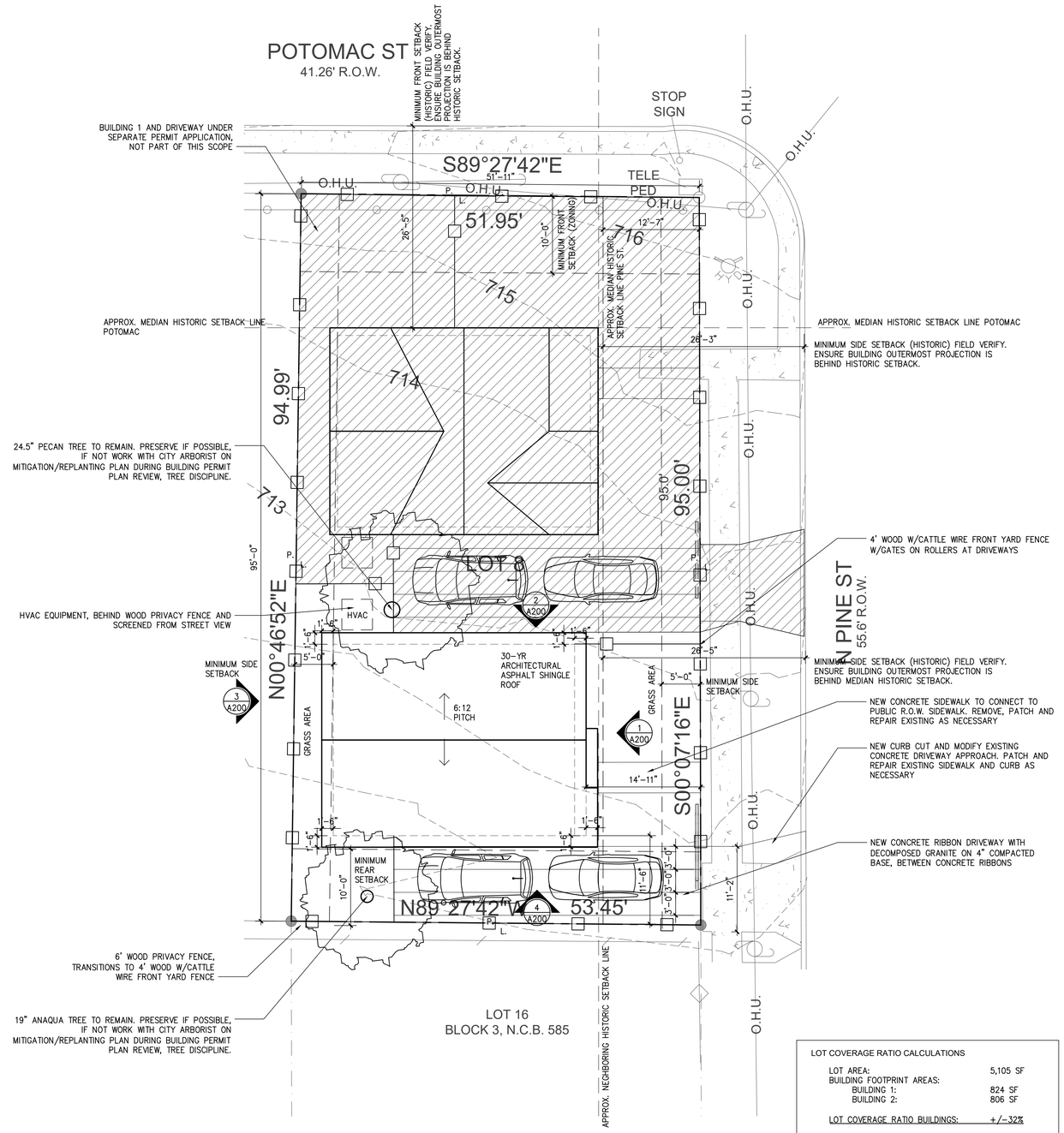


2 PROPOSED SITE PLAN
SCALE: 1/8"=1'=0"

LOT COVERAGE RATIO CALCULATIONS

| | |
|---|---|
| LOT AREA: | 5,105 SF |
| BUILDING FOOTPRINT AREAS: | |
| BUILDING 1: | 824 SF |
| BUILDING 2: | 806 SF |
| LOT COVERAGE RATIO BUILDINGS: | +/-32% |
| DRIVEWAY/SIDEWALK IMPERVIOUS AREA: | |
| BUILDING 1: | 302 SF |
| BUILDING 2: | 300 SF |
| LOT COVERAGE RATIO IMPERVIOUS: | +/-44% |


ZIGA ARCHITECTURE STUDIO
Architecture | Interiors | Historic Preservation

11723 WHISPER VALLEY ST
SAN ANTONIO, TX 78230
TEL. 210.201.3637

1700 S LAMAR BLVD, STE 338
AUSTIN, TX 78704
TEL. 512.522.5505

eMAIL INFO@STUDIOZIGA.COM
WWW.STUDIOZIGA.COM


NEW RESIDENCE
313 N. PINE ST. - LOT 8, BUILDING 2
SAN ANTONIO, TX 78202
HENNEKE FINANCIAL GROUP, LLC

DRAWING FOR REVIEW ONLY. NOT FOR CONSTRUCTION, PERMITTING OR REGULATORY APPROVAL



ISSUE

| # | DATE | DESCRIPTION |
|---|---|---|
| 1 | 10/02/2020 | HDRC FINAL |
| 2 | 10/15/2020 | HDRC FINAL REV. |
| 3 | 10/29/2020 | HDRC FINAL 2 REV. |

PROPOSED SITE/ROOF PLAN

| | |
|---|---|
| PROJECT NO. | 20-136 |
| DATE: | 10-29-20 |
| DRAWN BY: | FJZ |
| REVIEWED BY: | FJZ |

PROJECT ARCHITECT:
FELIX J. ZIGA JR., AIA
TEXAS LICENSE NO. 24683

SP100

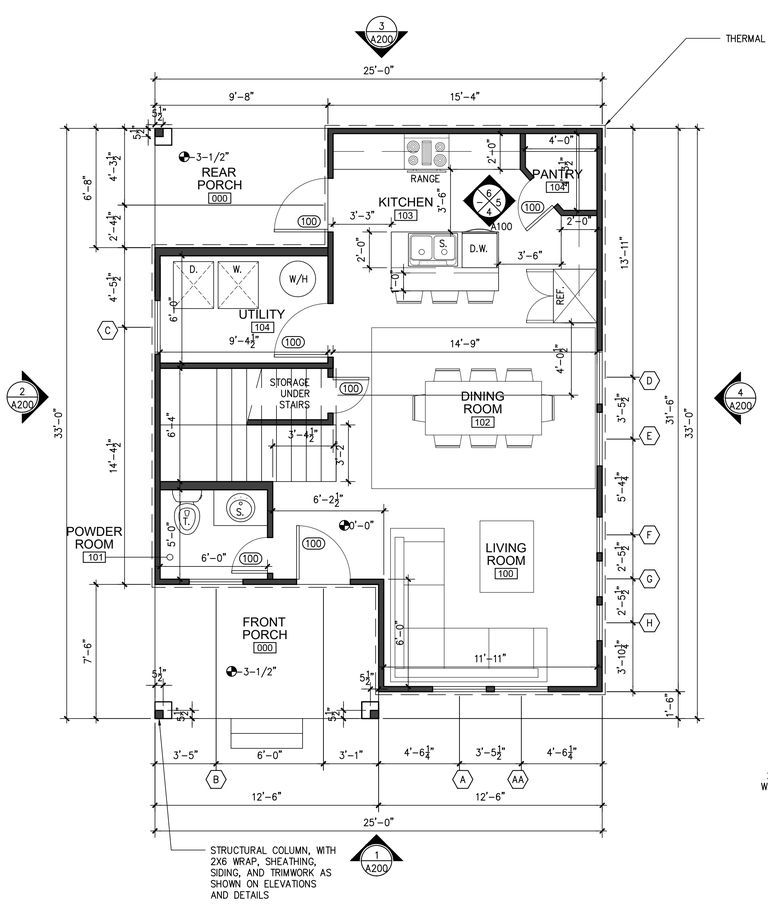


## 1 PROPOSED FIRST FLOOR PLAN

SCALE: 1/4"=1'-0"

PLAN NORTH

TRUE NORTH

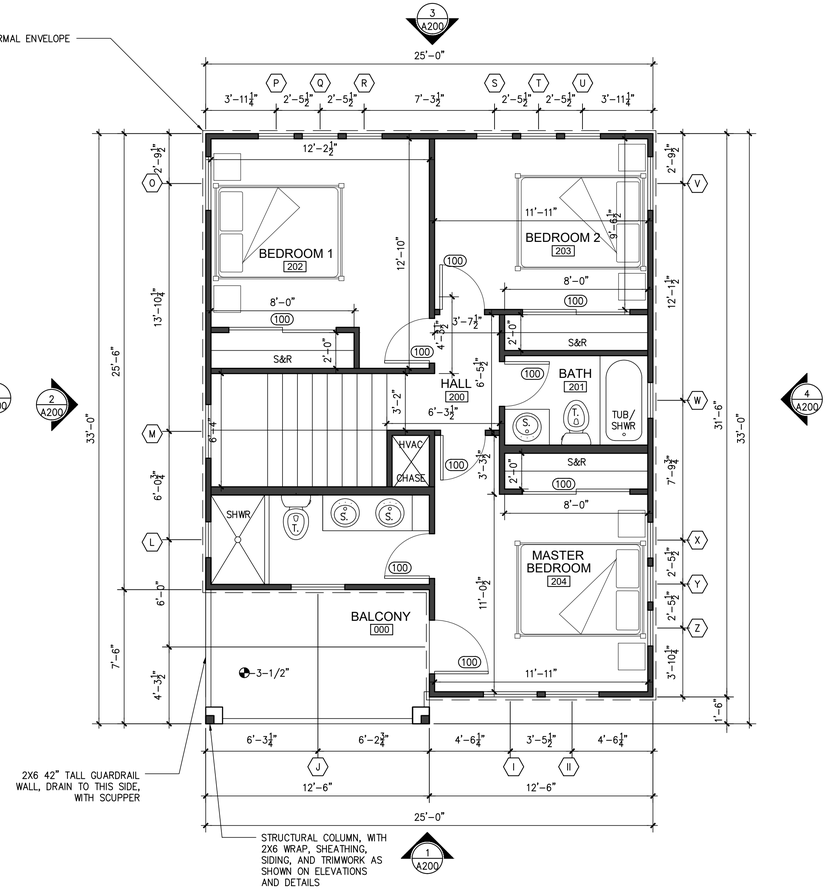


## 2 PROPOSED SECOND FLOOR PLAN

SCALE: 1/4"=1'-0"

PLAN NORTH

TRUE NORTH

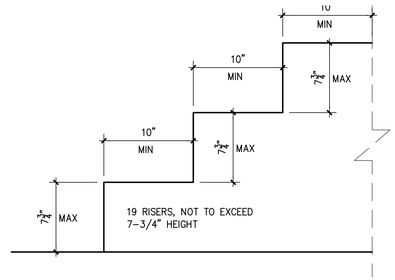


## 3 STAIR DIMENSION CONTROL DETAIL

SCALE: 1 1/2"=1'-0"

STAIR NOTE:

"Stair nosings shall comply with the following: R311.7.5.3 Nosings. The radius of curvature at the nosing shall be not greater than 9/16 inch. A nosing projection not less than ¾ inch and not more than 1-1/4 inches shall be provided on stairways with solid risers. The greatest nosing projection shall not exceed the smallest nosing projection by more than 3/8 inch between two stories, including the nosing at the level of floors and landings. Beveling of nosings shall not exceed ½ inch.

Exception: A nosing projection is not required where the tread depth is not less than 11 inches."

INTERIOR ELEVATIONS

PENDING – NOT DRAWN YET

ZIGA ARCHITECTURE STUDIO
Architecture | Interiors | Historic Preservation

11723 WHISPER VALLEY ST
SAN ANTONIO, TX 78230
TEL. 210.201.3637

1700 S LAMAR BLVD, STE 338
AUSTIN, TX 78704
TEL. 512.522.5505

eMAIL INFO@STUDIOZIGA.COM
WWW.STUDIOZIGA.COM

NEW RESIDENCE

313 N. PINE ST. - LOT 8, BUILDING 2
SAN ANTONIO, TX 78202

HENNEKE FINANCIAL GROUP, LLC

DRAWING FOR REVIEW ONLY. NOT FOR CONSTRUCTION, PERMITTING OR REGULATORY APPROVAL



ISSUE

| # | DATE | DESCRIPTION |
|---|---|---|
| 1 | 10/02/2020 | HDRC FINAL |
| 2 | 10/15/2020 | HDRC FINAL REV. |
| 3 | 10/29/2020 | HDRC FINAL 2 REV. |

PROPOSED FLOOR PLANS

| | |
|---|---|
| PROJECT NO. | 20-136 |
| DATE: | 10-29-20 |
| DRAWN BY: | FJZ |
| REVIEWED BY: | FJZ |

PROJECT ARCHITECT:
FELIX J. ZIGA JR., AIA
TEXAS LICENSE NO. 24683

A100

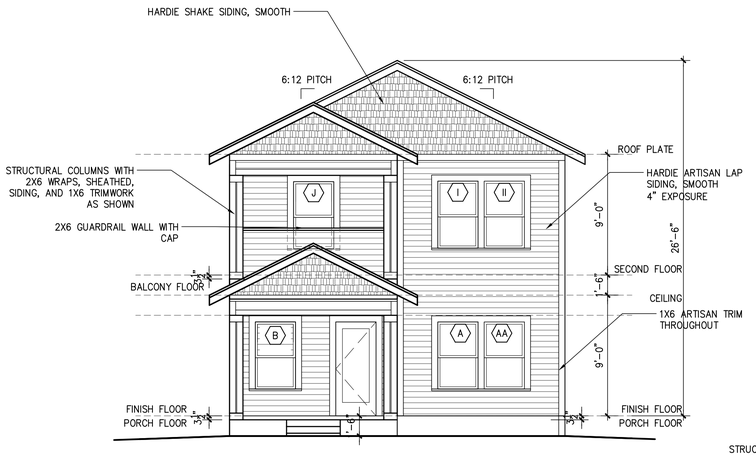


1 EAST ELEVATION

SCALE: 3/16"=1'=0"

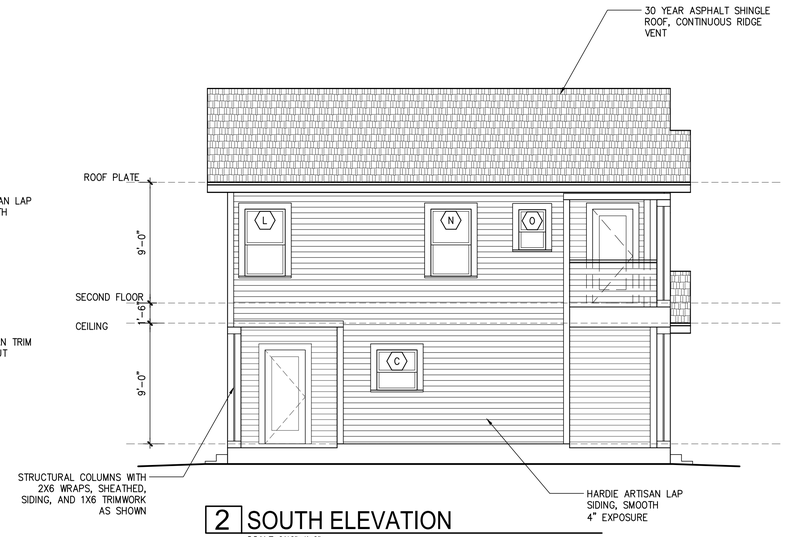


2 SOUTH ELEVATION

SCALE: 3/16"=1'=0"

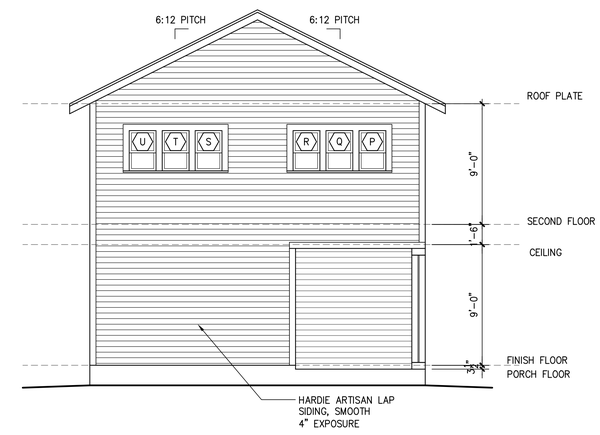


3 WEST ELEVATION

SCALE: 3/16"=1'=0"

**TABLE R402.4.1.1**
**AIR BARRIER AND INSULATION INSTALLATION**

| COMPONENT | AIR BARRIER CRITERIA | INSULATION INSTALLATION CRITERIA |
|---|---|---|
| General requirements | A continuous air barrier shall be installed in the building envelope.<br>The exterior thermal envelope contains a continuous air barrier.<br>Breaks or joints in the air barrier shall be sealed. | Air-permeable insulation shall not be used as a sealing material. |
| Ceiling/attic | The air barrier in any dropped ceiling/soffit shall be aligned with the insulation and any gaps in the air barrier shall be sealed.<br>Access openings, drop down stairs or knee wall doors to unconditioned attic spaces shall be sealed. | The insulation in any dropped ceiling/soffit shall be aligned with the air barrier. |
| Walls | The junction of the foundation and sill plate shall be sealed.<br>The junction of the top plate and the top of exterior walls shall be sealed.<br>Knee walls shall be sealed. | Cavities within corners and headers of frame walls shall be insulated by completely filling the cavity with a material having a thermal resistance of R-3 per inch minimum.<br>Exterior thermal envelope insulation for framed walls shall be installed in substantial contact and continuous alignment with the air barrier. |
| Windows, skylights and doors | The space between window/door jambs and framing, and skylights and framing shall be sealed. | |
| Rim joists | Rim joists shall include the air barrier. | Rim joists shall be insulated. |
| Floors (including above garage and cantilevered floors) | The air barrier shall be installed at any exposed edge of insulation. | Floor framing cavity insulation shall be installed to maintain permanent contact with the underside of subfloor decking, or floor framing cavity insulation shall be permitted to be in contact with the top side of sheathing, or continuous insulation<br>installed on the underside of floor framing and extends from the bottom to the top of all perimeter floor framing members. |
| Crawl space walls | Exposed earth in unvented crawl spaces shall be covered with a Class I vapor retarder with overlapping joints taped. | Where provided instead of floor insulation, insulation shall be permanently attached to the crawlspace walls. |
| Shafts, penetrations | Duct shafts, utility penetrations, and flue shafts opening to exterior or unconditioned space shall be sealed. | |
| Narrow cavities | | Batts in narrow cavities shall be cut to fit, or narrow cavities shall be filled by insulation that on installation readily conforms to the available cavity space. |
| Garage separation | Air sealing shall be provided between the garage and conditioned spaces. | |
| Recessed lighting | Recessed light fixtures installed in the building thermal envelope shall be sealed to the drywall. | Recessed light fixtures installed in the building thermal envelope shall be air tight and IC rated. |
| Plumbing and wiring | | Batt insulation shall be cut neatly to fit around wiring and plumbing in exterior walls, or insulation that on installation readily conforms to available space shall extend behind piping and wiring. |
| Shower/tub on exterior wall | The air barrier installed at exterior walls adjacent to showers and tubs shall separate them from the showers and tubs. | Exterior walls adjacent to showers and tubs shall be insulated. |
| Electrical/phone box on exterior walls | The air barrier shall be installed behind electrical or communication boxes or air-sealed boxes shall be installed. | |
| HVAC register boots | HVAC register boots that penetrate building thermal envelope shall be sealed to the subfloor or drywall. | |
| Concealed sprinklers | When required to be sealed, concealed fire sprinklers shall only be sealed in a manner that is recommended by the manufacturer. Caulking or other adhesive sealants shall not be used to fill voids between fire sprinkler cover plates and walls or ceilings. | |

a. In addition, inspection of log walls shall be in accordance with the provisions of ICC-400.

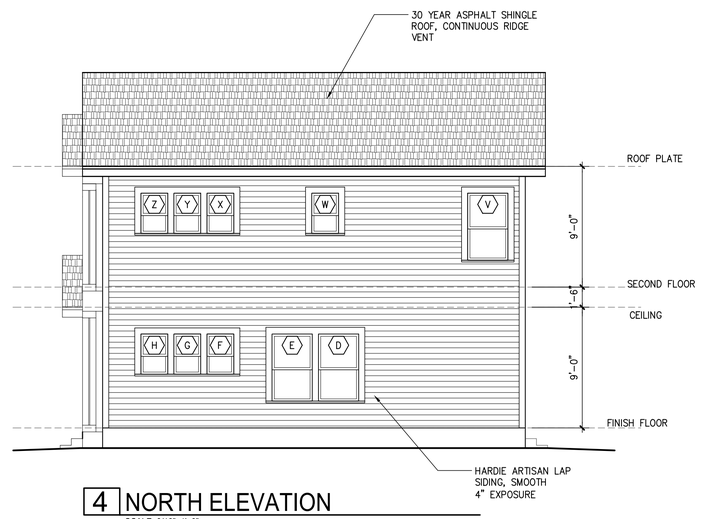


4 NORTH ELEVATION

SCALE: 3/16"=1'=0"


ZIGA ARCHITECTURE STUDIO
Architecture | Interiors | Historic Preservation

11723 WHISPER VALLEY ST
SAN ANTONIO, TX 78230
TEL. 210.201.3637

1700 S LAMAR BLVD, STE 338
AUSTIN, TX 78704
TEL. 512.522.5505

eMAIL INFO@STUDIOZIGA.COM
WWW.STUDIOZIGA.COM


NEW RESIDENCE

313 N. PINE ST. - LOT 8, BUILDING 2
SAN ANTONIO, TX 78202

HENNEKE FINANCIAL GROUP, LLC

DRAWING FOR REVIEW ONLY. NOT FOR CONSTRUCTION, PERMITTING OR REGULATORY APPROVAL



ISSUE

| # | DATE | DESCRIPTION |
|---|---|---|
| 1 | 10/02/2020 | HDRC FINAL |
| 2 | 10/15/2020 | HDRC FINAL REV. |
| 3 | 10/29/2020 | HDRC FINAL 2 REV. |

PROPOSED EXTERIOR ELEVATIONS

| | |
|---|---|
| PROJECT NO. | 20-136 |
| DATE: | 10-29-20 |
| DRAWN BY: | FJZ |
| REVIEWED BY: | FJZ |

PROJECT ARCHITECT:
FELIX J. ZIGA JR., AIA
TEXAS LICENSE NO. 24683

A200

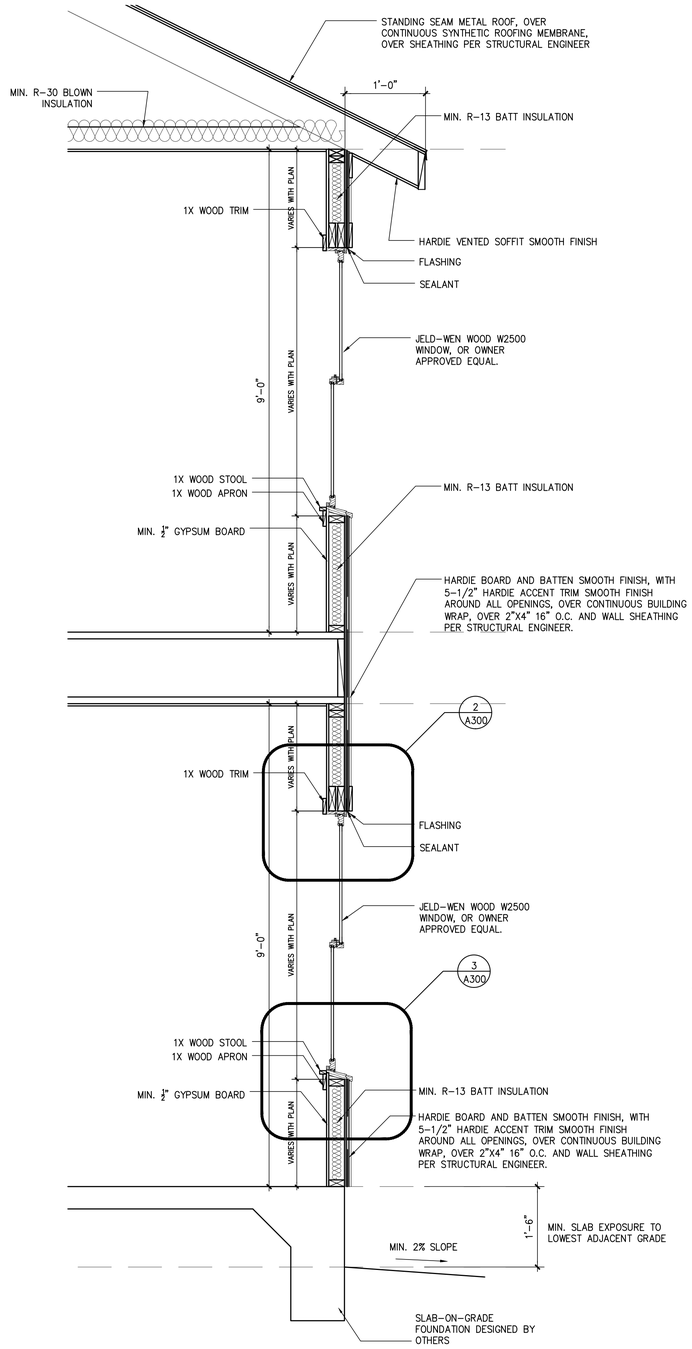


1 WALL SECTION

SCALE: 3/4"=1'-0"

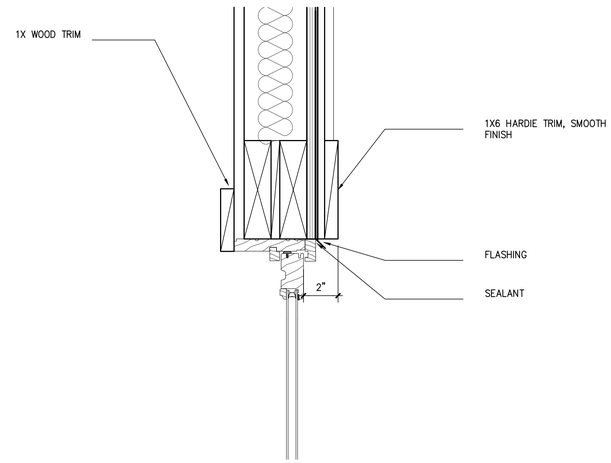


2 WINDOW HEAD DETAIL

SCALE: 3"=1'-0"

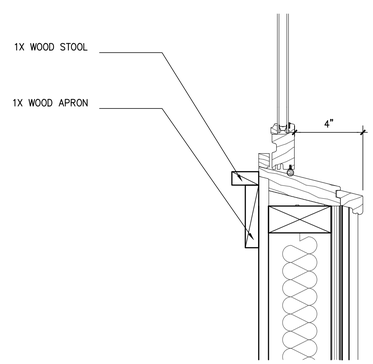


3 WINDOW SILL DETAIL

SCALE: 3"=1'-0"

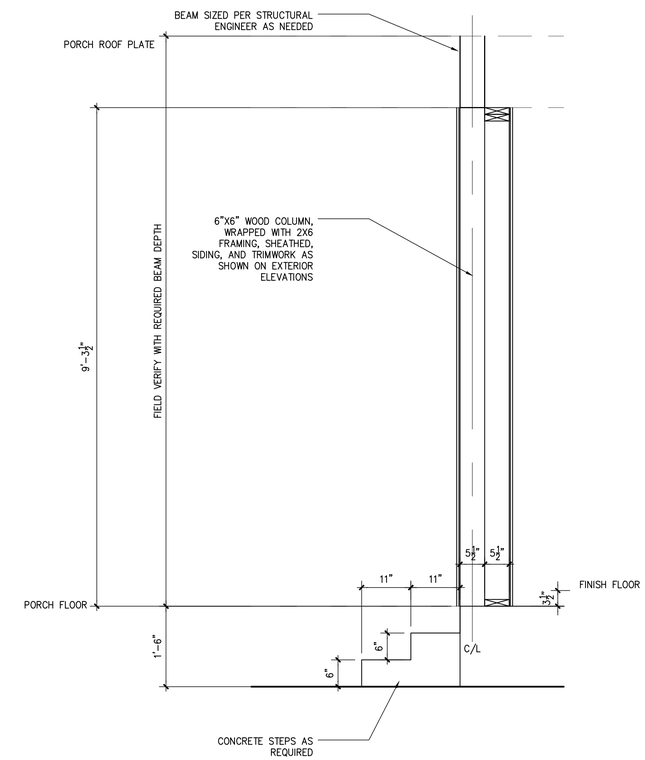


4 TYPICAL CEDAR COLUMN DETAIL

SCALE: 3/4"=1'-0"

ZIGA ARCHITECTURE STUDIO
Architecture | Interiors | Historic Preservation

11723 WHISPER VALLEY ST
SAN ANTONIO, TX 78230
TEL. 210.201.3637

1700 S LAMAR BLVD, STE 338
AUSTIN, TX 78704
TEL. 512.522.5505

eMAIL INFO@STUDIOZIGA.COM
WWW.STUDIOZIGA.COM

NEW RESIDENCE

313 N. PINE ST. - LOT 8, BUILDING 2
SAN ANTONIO, TX 78202

HENNEKE FINANCIAL GROUP, LLC

DRAWING FOR REVIEW ONLY. NOT FOR CONSTRUCTION, PERMITTING OR REGULATORY APPROVAL



ISSUE

| # | DATE | DESCRIPTION |
|---|---|---|
| 1 | 10/02/2020 | HDRC FINAL |
| 2 | 10/15/2020 | HDRC FINAL REV. |
| 3 | 10/29/2020 | HDRC FINAL 2 REV. |

WALL SECTION AND DETAILS

| | |
|---|---|
| PROJECT NO. | 20-136 |
| DATE: | 10-29-20 |
| DRAWN BY: | FJZ |
| REVIEWED BY: | FJZ |

PROJECT ARCHITECT:
FELIX J. ZIGA JR., AIA
TEXAS LICENSE NO. 24683

A300

# W-2500 Wood
# Wood Window
# Double-Hung

Architectural Design Manual

September 2019

# TABLE OF CONTENTS

## GENERAL INFORMATION

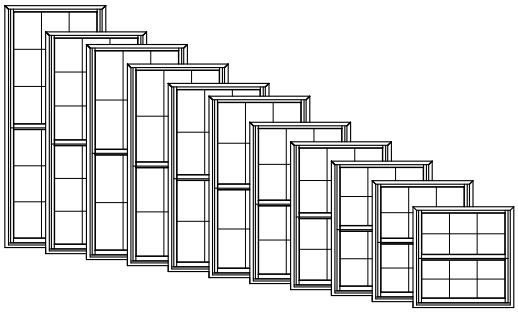

Dimensional Windows

W-2500 Wood Double-Hung windows may be specified as "dimensional" by adjusting the desired rough opening width or height. Siteline Wood Double-Hung windows feature fully operating upper and lower sash which can be tilted or removed for easy cleaning.

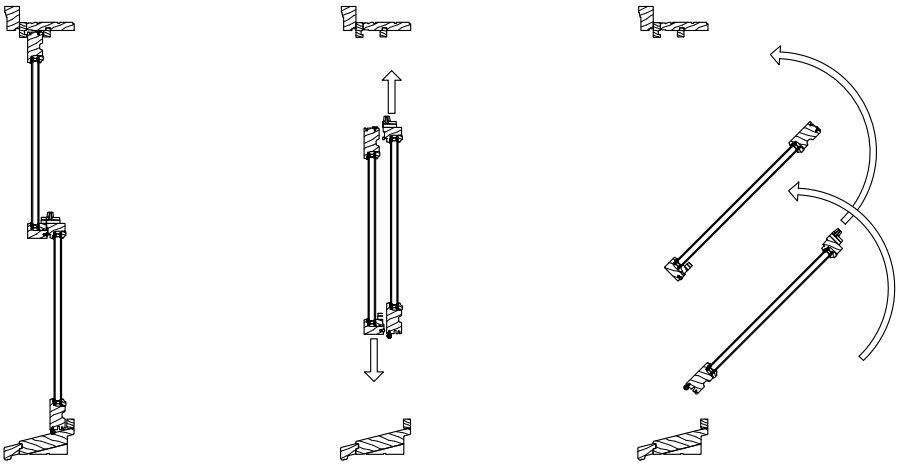

Sash Closed

Upper & Lower Operating Sash

Sash Tilting

Multiple Assemblies

W-2500 Wood Double-Hung windows may be mulled beside other wood double-hung, wood picture windows, or below wood transom windows, to fulfill a wide variety of needs.

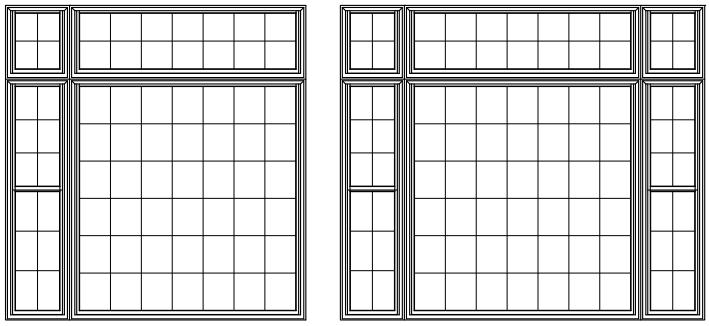

# LITE CUT INFORMATION

Lite Cut Options

W-2500 Wood Double-Hung windows are available with removable Grilles, Grilles Between Glass (GBG), or Simulated Divided Lites (SDL) in various widths and styles. The standard grid patterns are shown below.

Special lite cut patterns can include a wide variety of straight line and radius patterns. Non-standard patterns are subject to factory approval.

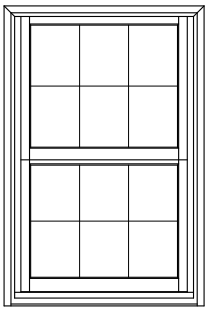

Colonial

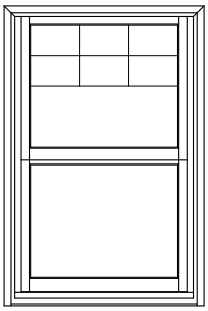

Colonial From Top Down

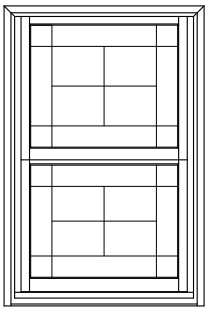

Uneven

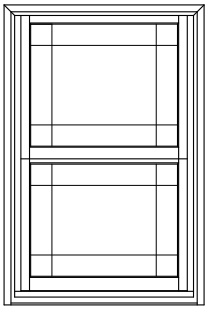

Prairie

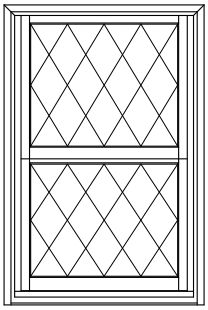

Diamond

Bar Alignment

Alignment of divided lite muntin bars from one window to the next is often required by fine architectural design. Wood grilles, GBG, and SDL's may be specified with muntin bars aligned.

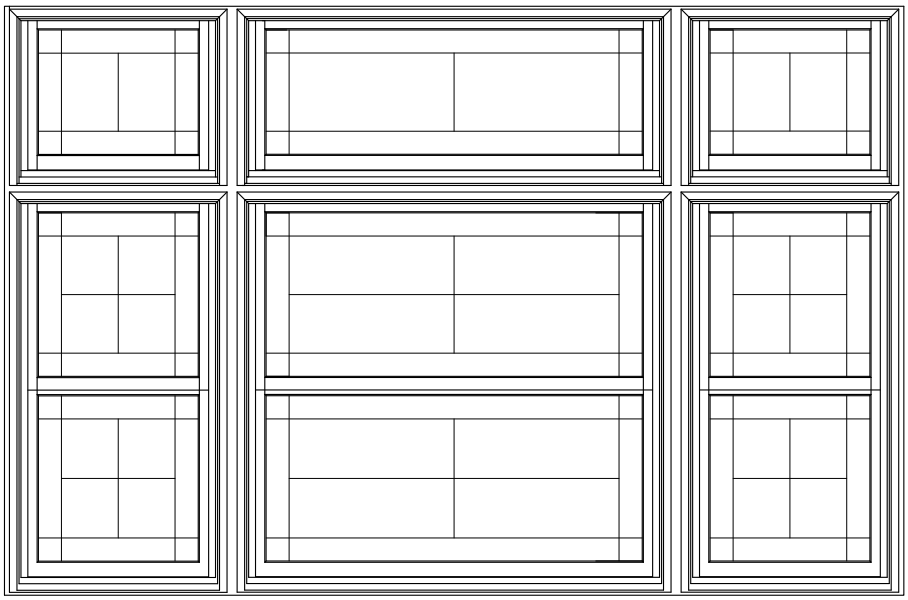

# CLEAR OPENING FORMULAS

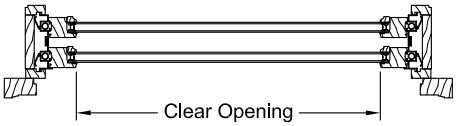


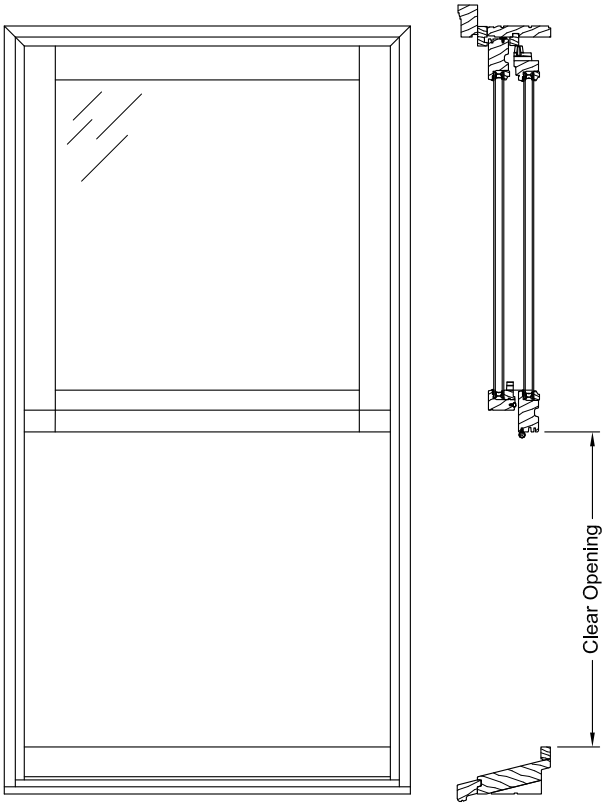


Double-Hung (Even Divide)
Vertical = (Frame Height / 2) - 3 9/16"
Horizontal = Frame Width - 3 3/4"

# GRID OPTIONS

Exterior ← → Interior

## SDL Options

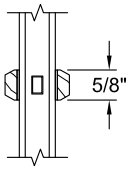


5/8"
Putty

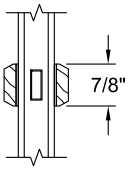


7/8"
Putty

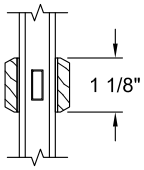


1 1/8"
Putty

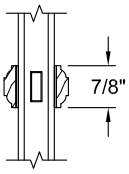


7/8"
Bead

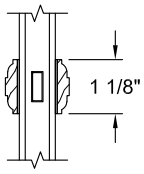


1 1/8"
Bead

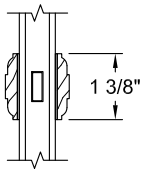


1 3/8"
Bead

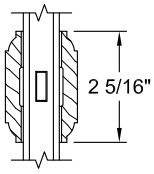


2 5/16"
Bead

Note: Various Combinations of the SDL Bars Shown are Available

## GBG Options

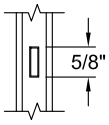


5/8" Flat

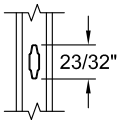


23/32"
Contour

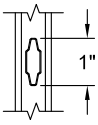


1" Contour

## Grille Options

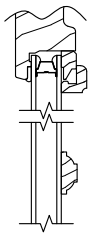

7/8"
Full Surround

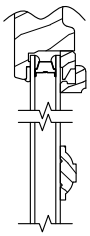

1 1/8"
Full Surround

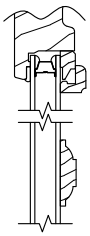

1 3/8"
Full Surround

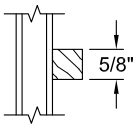


5/8"
Wood Grille

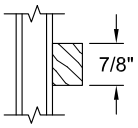


7/8"
Wood Grille

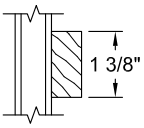


1 3/8"
Wood Grille

## UNIT SIZING

Rough Opening
The frame size of the window plus 3/4".

Masonry Opening
The overall size of the window, including trim, plus 1/2".

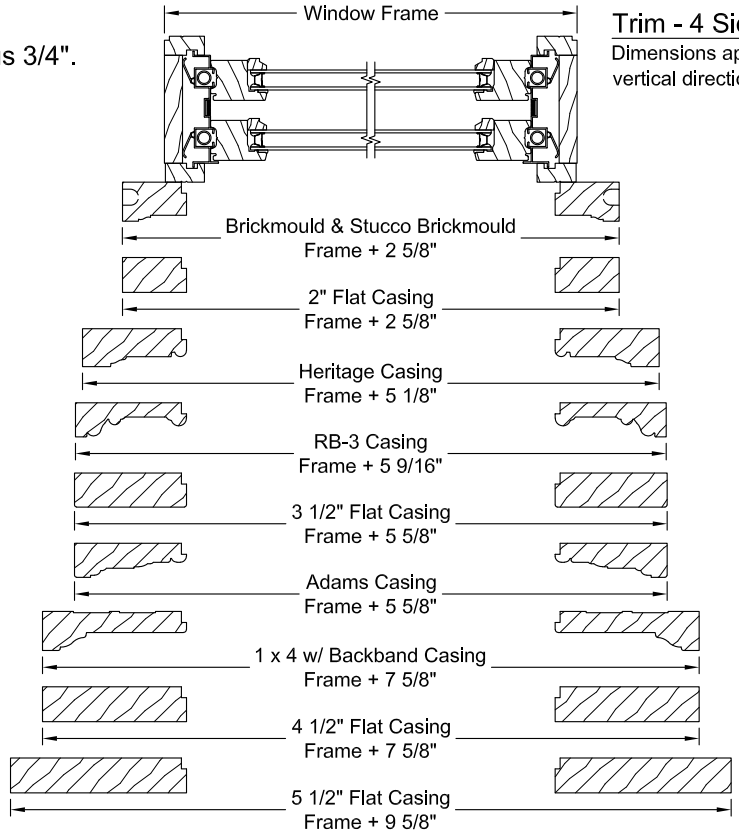


Trim - 4 Sides Of Frame
Dimensions apply to horizontal and vertical directions.

Trim - 3 Sides With Standard Sill Nose
Dimensions apply to vertical direction only.

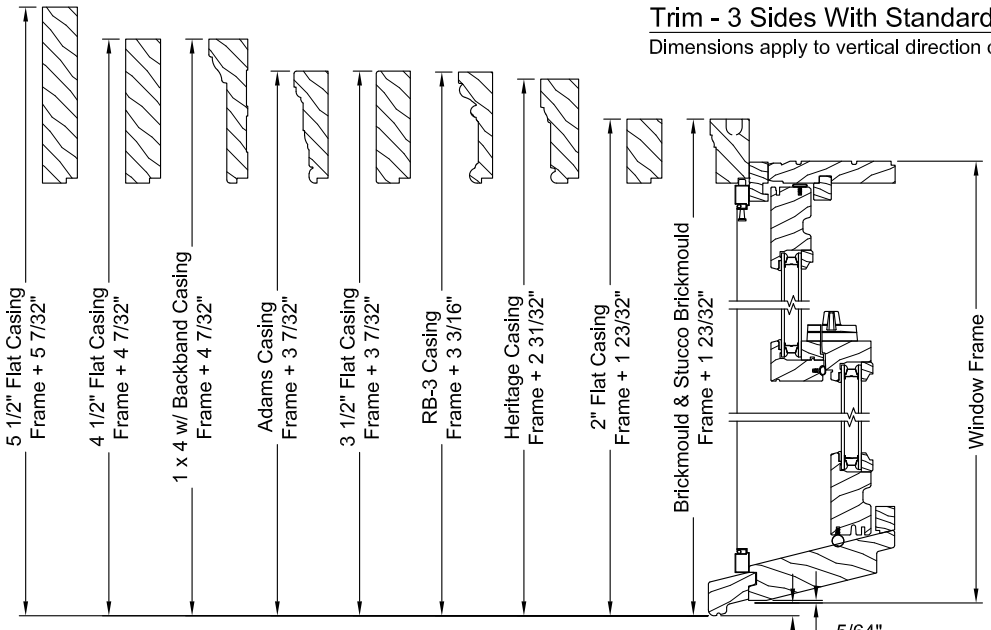

# TRIM & SILL OPTIONS

## Trim Options

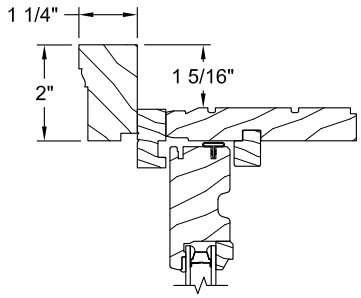


Brickmould

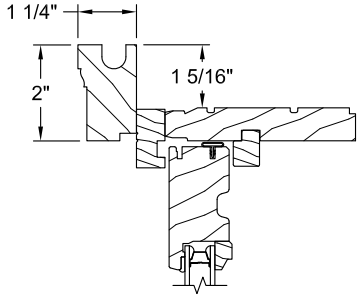


Stucco Brickmould

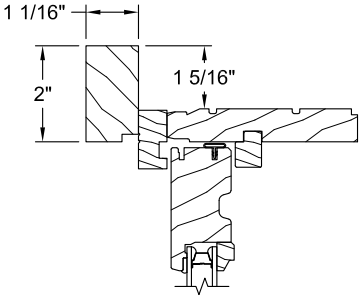


2" Flat Casing

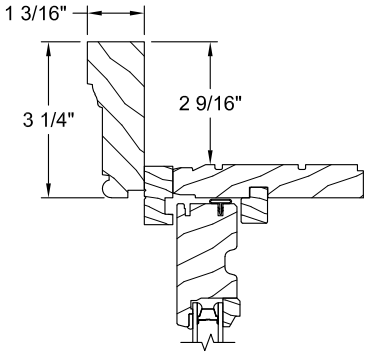


Heritage Casing

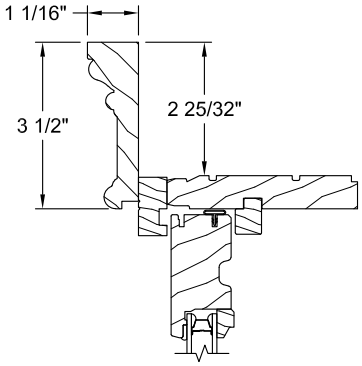


RB-3 Casing

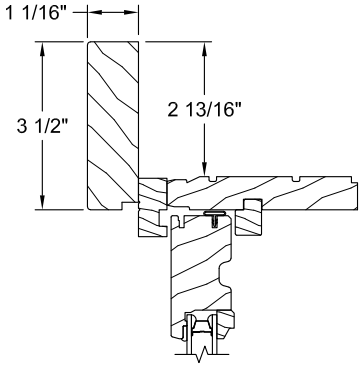


3 1/2" Flat Casing

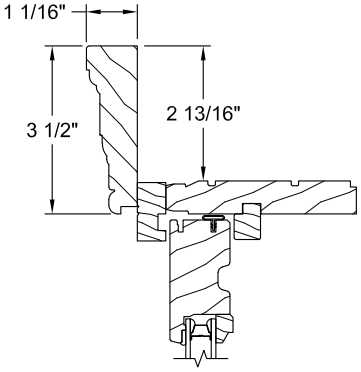


Adams Casing

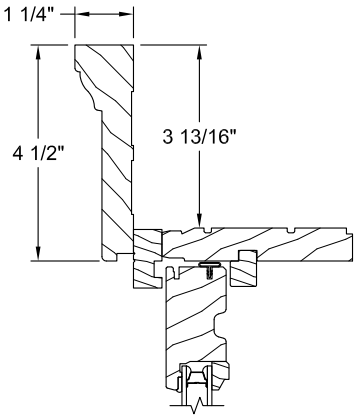


1 x 4 w/ Backband Casing

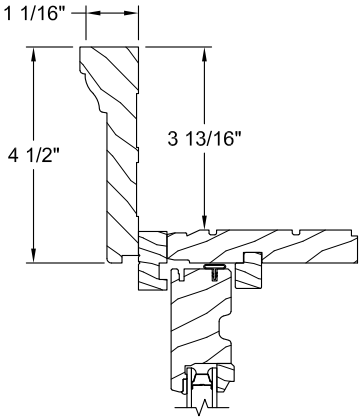


4 1/2" Casing

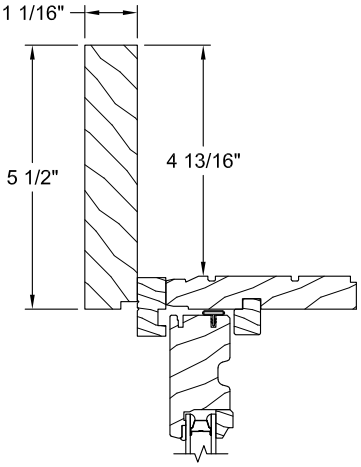


5 1/2" Casing

## Sill Options

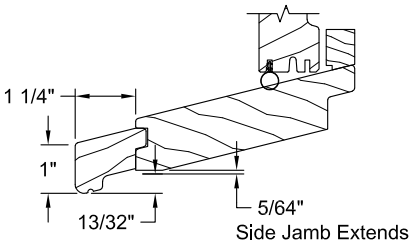


Standard
Sill Nose

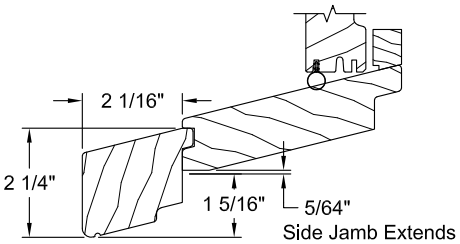


2" Sill Nose



Product specifications may change without notice.
Questions? Consult JELD-WEN customer service.

Scale: 3" = 1' - 0"

# JAMB EXTENDER & PREP FOR STOOL OPTIONS

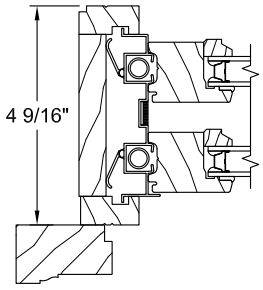


4 9/16" Jamb Width

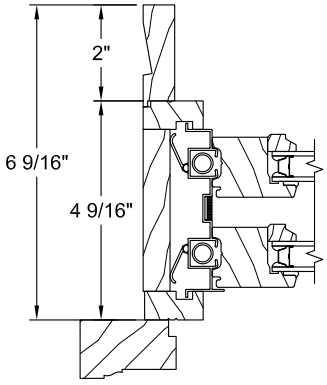


6 9/16" Jamb Width

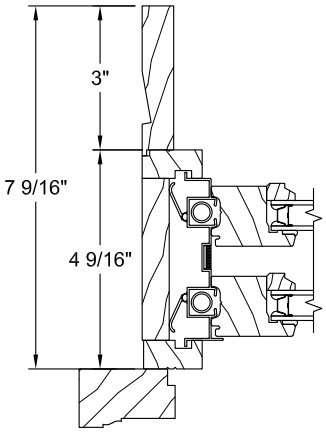


7 9/16" Jamb Width

Return Kerf:
Generally located from first visible interior frame line. Kerfed option available on all jamb extender sizes.

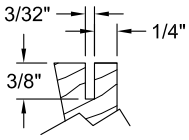


4/4 Jamb Typ.

Prep for Stool

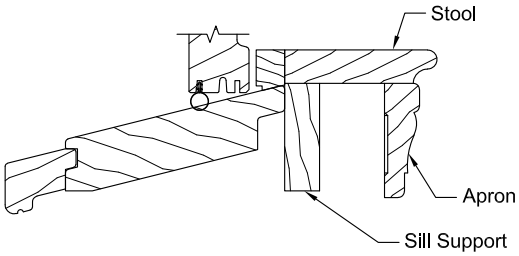


Note: Stool, apron, and sill support are applied by trim carpenter after window is installed and are not provided by JELD-WEN. Unit is shipped without sill jamb extenders.

## MULLION OPTIONS

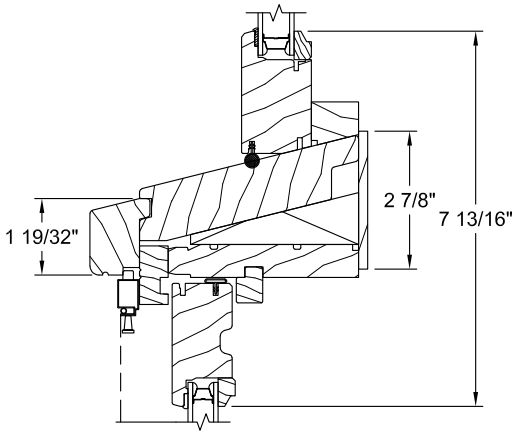


Geometric Insash Transom
Operator

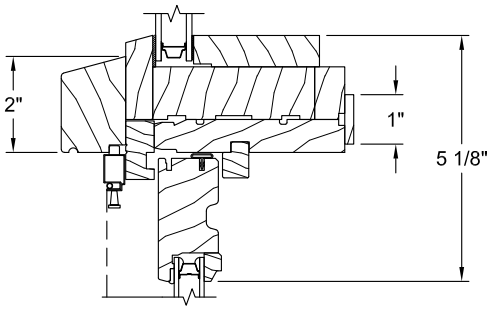


Geometric Direct Set
Operator

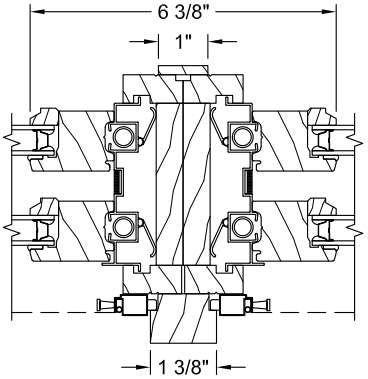


Operator / Operator

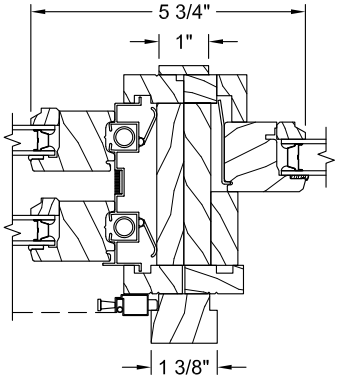


Operator / Geometric Insash

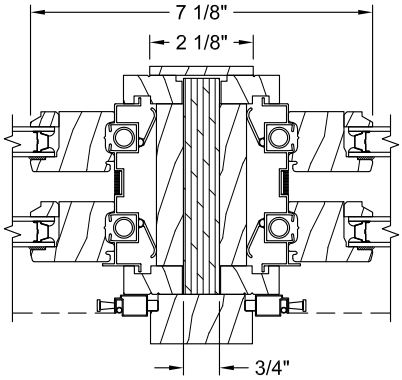


Operator / Operator
with 3/4" Wood Spread Mull

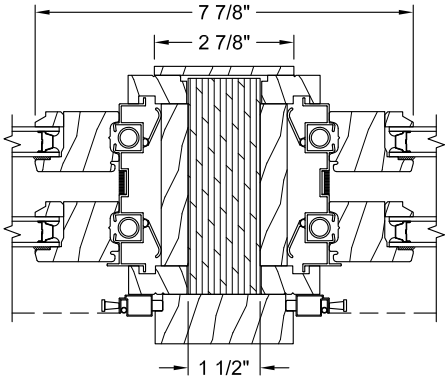


Operator / Operator
with 1 1/2" Wood Spread Mull

## OPERATOR SECTIONS

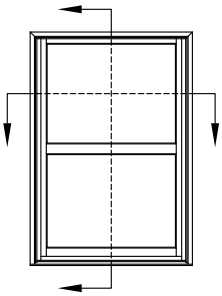

Not To Scale - Reference Only

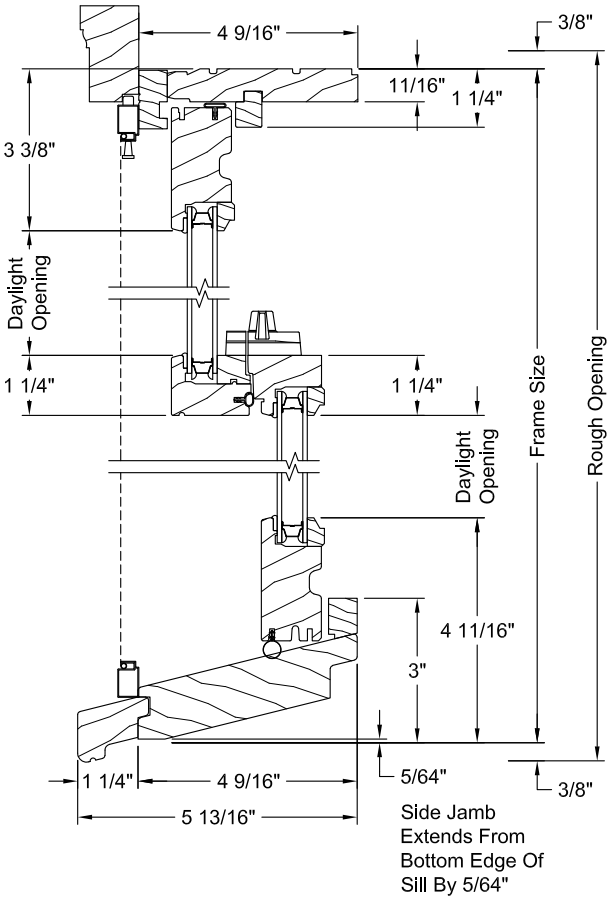


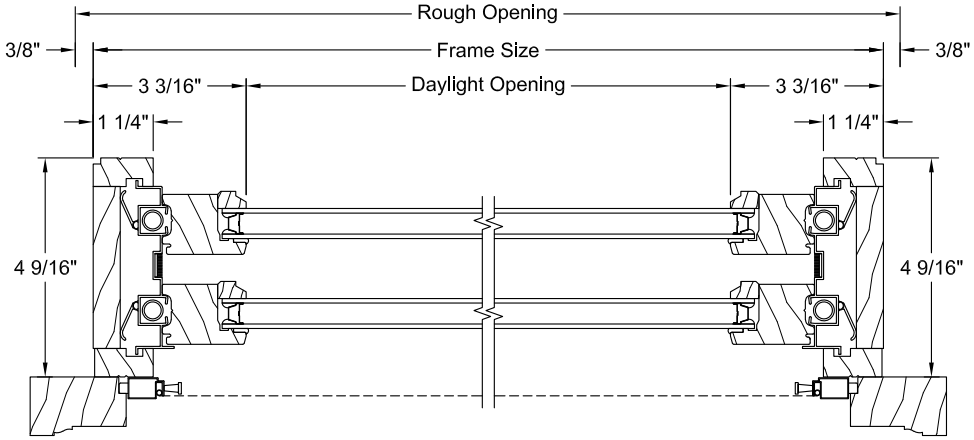




Product specifications may change without notice.
Questions? Consult JELD-WEN customer service.

Scale: 3" = 1' - 0"

## OPERATOR POCKET SECTIONS

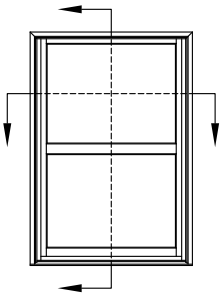

Not To Scale - Reference Only

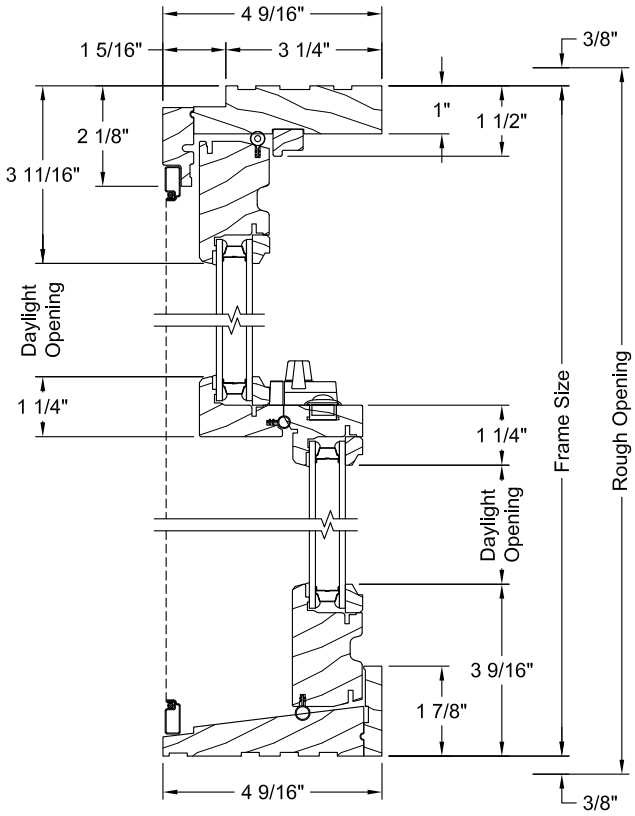


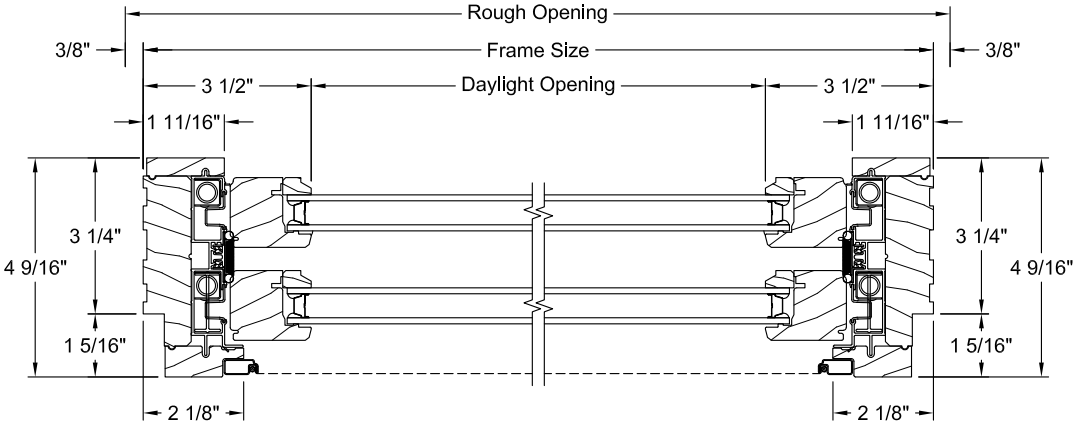

## GEOMETRIC INSASH POCKET SECTIONS

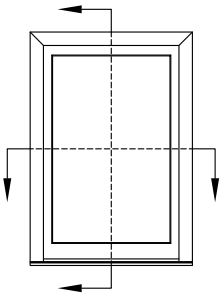

Not To Scale - Reference Only

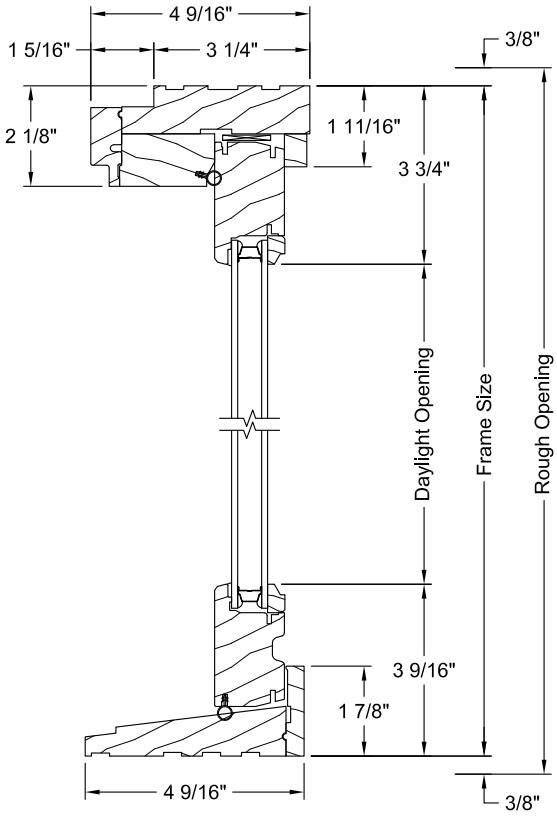


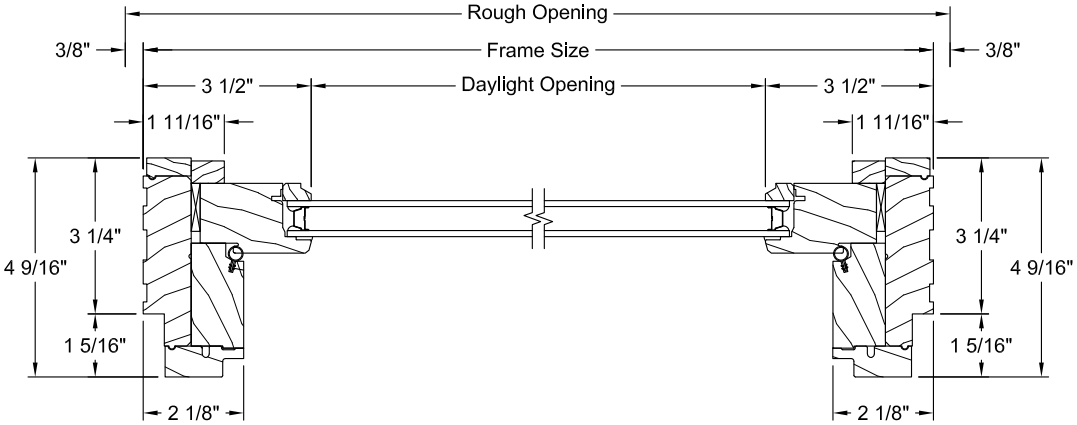




Product specifications may change without notice.
Questions? Consult JELD-WEN customer service.

## GEOMETRIC INSASH TRANSOM SECTIONS

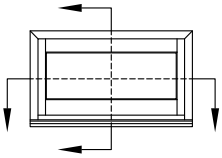

Not To Scale - Reference Only

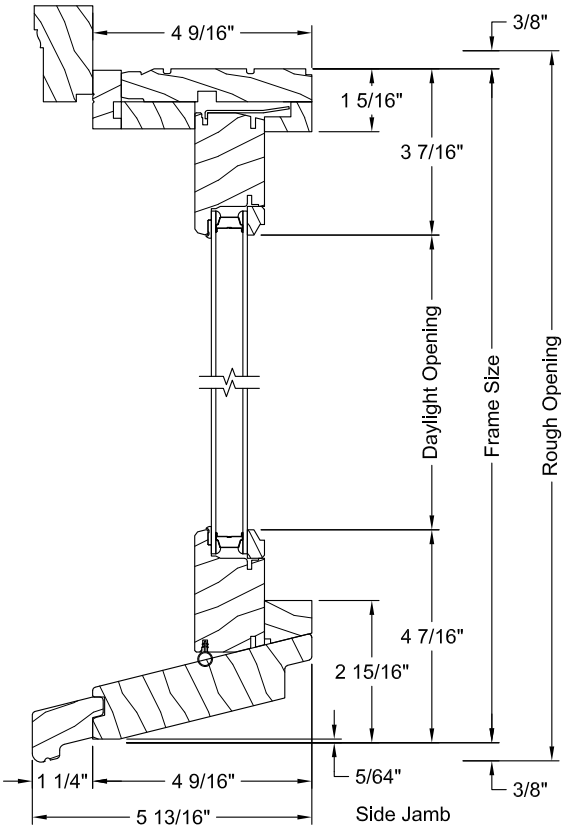


Side Jamb Extends From Bottom Edge Of Sill By 5/64"

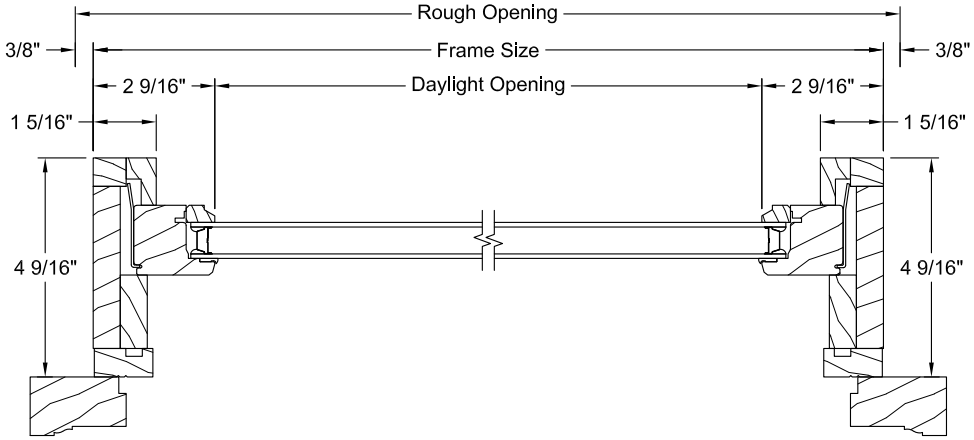




Product specifications may change without notice.
Questions? Consult JELD-WEN customer service.

Scale: 3" = 1' - 0"

## MIN-MAX SIZING - OPERATOR

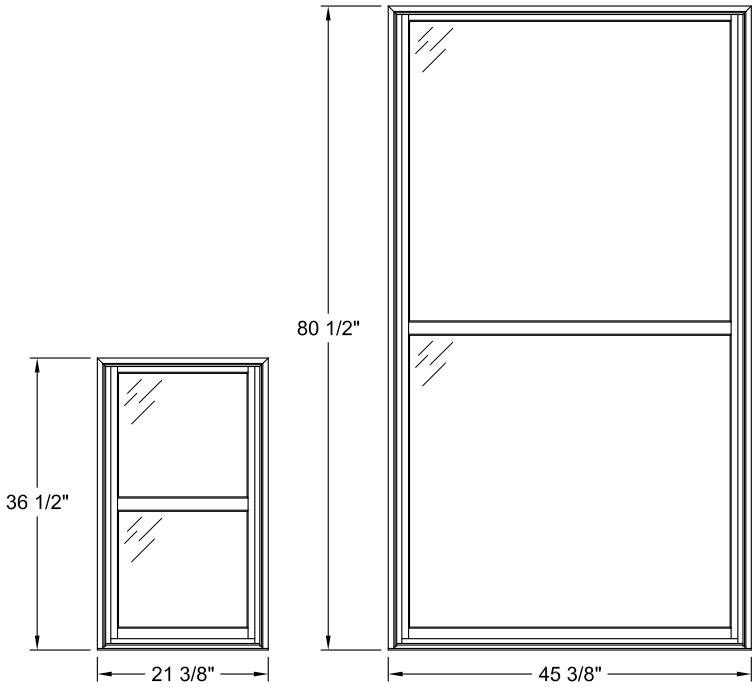


Minimum Size
21 3/8" x 36"

Maximum Size:
45 3/8" x 80 1/2"

| Window Width | | | |
|---|---|---|---|
| 21 3/8" | 25 3/8" | 29 3/8" | 31 3/8" |
| 33 3/8" | 35 3/8" | 37 3/8" | 41 3/8" |
| 45 3/8" | | | |
| **Window Height** | | | |
| 36 1/2" | 40 1/2" | 48 1/2" | 52 1/2" |
| 56 1/2" | 60 1/2" | 64 1/2" | 68 1/2" |
| 72 1/2" | 76 1/2" | 80 1/2" | |

## MIN-MAX SIZING - GEOMETRIC INSASH

### Standard Sizing

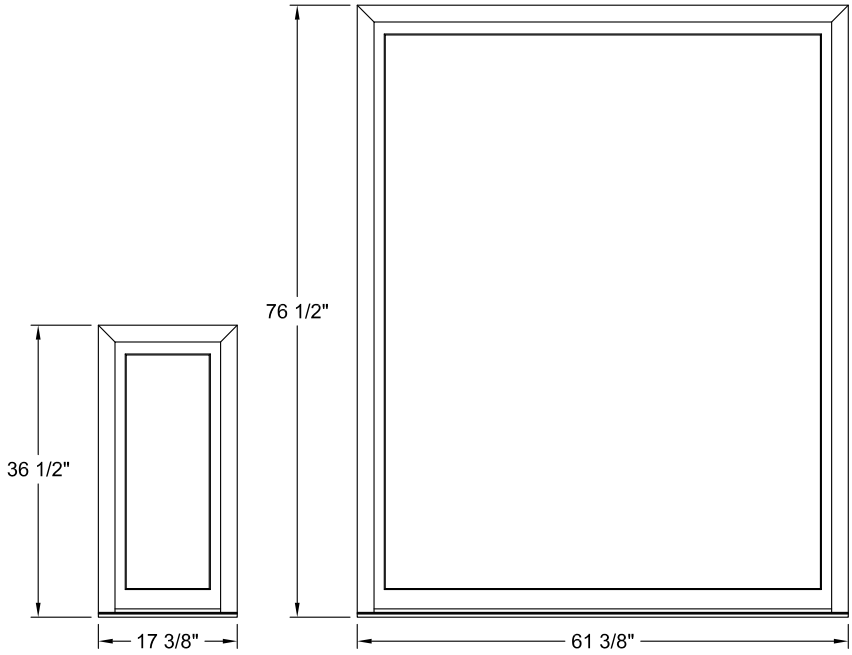


Minimum Size
21 3/8" x 36"

Minimum Size
21 3/8" x 36"

| Fixed Insash Width | | | |
|---|---|---|---|
| 17 3/8" | 21 3/8" | 25 3/8" | 29 3/8" |
| 33 3/8" | 37 3/8" | 41 3/8" | 45 3/8" |
| 49 3/8" | 53 3/8" | 61 3/8" | |
| **Fixed Insash Height** | | | |
| 36 1/2" | 40 1/2" | 48 1/2" | 52 1/2" |
| 56 1/2" | 60 1/2" | 64 1/2" | 68 1/2" |
| 72 1/2" | 76 1/2" | | |

### Transom Sizing

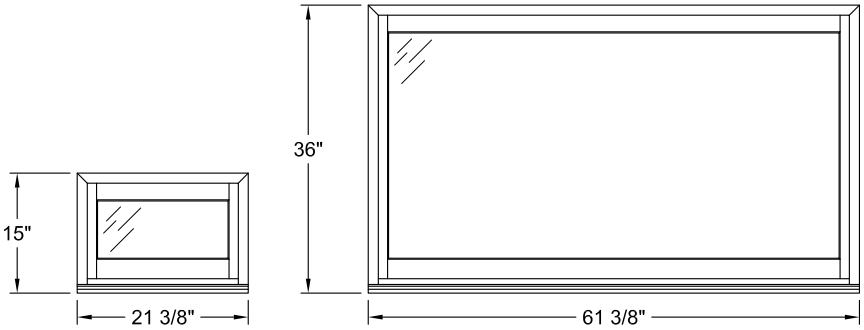


Minimum Size
15" x 21 3/8"

Maximum Size:
61 3/8" x 36"

| Transom Width | | | |
|---|---|---|---|
| 21 3/8" | 25 3/8" | 29 3/8" | 33 3/8" |
| 37 3/8" | 41 3/8" | 42 3/4" | 45 3/8" |
| 49 3/8" | 50 3/4" | 53 3/8" | 58 3/4" |
| 61 3/8" | | | |
| **Transom Height** | | | |
| 15" | 18" | 24" | 36" |

# The Home Depot Special Order Quote

**Customer Agreement #:** H6544-92930

**Printed Date:** 10/16/2017

**Customer:** [redacted]

**Address:**

**Phone 1:**

**Phone 2:**

**Email:**

**Store:** 6544

**Associate:** LAN

**Address:** 435 SUNSET RD WEST
SAN ANTONIO, TX 78209

**Phone:** 210-824-9677

| | |
|---|---|
| **Pre-Savings Total:** | $3,998.81 |
| **Total Savings:** | ($0.00) |
| **Pre-Tax Price:** | $3,998.81 |

***All prices are subject to change. Customer is responsible for verifying product selections. The Home Depot will not accept returns for the below products.***

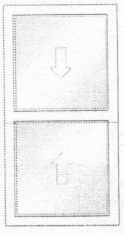

Width = 31.375
Height = 60.5
Sash Split = Even

Catalog Version 59

| Line Number | Item Summary | Was Price | Now Price | Quantity | Total Savings | Total Price |
|---|---|---|---|---|---|---|
| 100-1 | 31.375 x 60.5 Double Hung/Single Hung Double Hung | $251.48 | $251.48 | 14 | $0.00 | $3,520.72 |
| | **Unit 100 Total:** | **$251.48** | **$251.48** | | **$0.00** | **$3,520.72** |

**Begin Line 100 Description**

Wood W-2500 Double Hung Double Hung 31.375 x 60.5
Width = 31.375
Height = 60.5
Sash Split = Even
Quick Config = No
Operation (Outside View) = Double Hung
Assembly = Unit
DP Rating = DP25
Jambliner Color = White Jambliners
Sill Stop Applied = Yes
Exterior Color = Primed
Species = Pine
Interior Finish = Primed
Certification = Sustainable Forestry Initiative
Customer Elevation = 0 - 4000 feet
Energy Rating = Energy Star
Zip Code = custom
Custom Zip Code = 78212
Energy Star Zone = EStar Southern
Glazing Type = Insulated
Low-E Option = Low-E 366
Tinted Glass = No Tint (Clear)
Glass Style = Clear
Tempered Glass = Not Tempered
California Fire Code Label = No
Neat Glass = No
Preserve Glass = Preserve
IG Options = Argon
Hardware Finish = White
Sash Limiter = No Sash Limiter
Finger Plows = With Finger Plow(s)
Window Egress = Meets Egress 5.0 Clear Opening (Check Local Code)
Screen Option = No Screen
Check Info Link = Acoustic Ratings Info link
Room Location = 14
Is This a Remake/Re-Order = No
Specific/Additional Information = na
SKU = 339728
Vendor Name = S/OJELD-WEN PREMIUM WOOD
Vendor Number = 60058104
Customer Service = 1-800-246-9131 Option 2
Manufacturer = JELD-WEN Wood Windows & Patio Doors
Catalog Version Date = 03/31/2017
Jamb Width = 4.5625
Exterior Trim = No Exterior Trim
Sill Nosing = No Sill Nosing
Kerf Jamb = No Kerf

**End Line 100 Description**

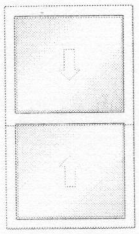

Width = 35.375
Height = 60.5
Sash Split = Even

Catalog Version 59

| Line Number | Item Summary | Was Price | Now Price | Quantity | Total Savings | Total Price |
|---|---|---|---|---|---|---|
| 200-1 | 35.375 x 60.5 Double Hung/Single Hung Double Hung | $266.77 | $266.77 | 1 | $0.00 | $266.77 |
| | Unit 200 Total: | $266.77 | $266.77 | | $0.00 | $266.77 |

**Begin Line 200 Description**

Wood W-2500 Double Hung Double Hung 35.375 x 60.5
Width = 35.375
Height = 60.5
Sash Split = Even
Quick Config = No
Operation (Outside View) = Double Hung
Assembly = Unit
DP Rating = DP25
Jambliner Color = White Jambliners
Sill Stop Applied = Yes
Exterior Color = Primed
Species = Pine
Interior Finish = Primed
Certification = Sustainable Forestry Initiative
Customer Elevation = 0 - 4000 feet
Energy Rating = Energy Star

Zip Code = custom
Custom Zip Code = 78212
Energy Star Zone = EStar Southern
Glazing Type = Insulated
Low-E Option = Low-E 366
Tinted Glass = No Tint (Clear)
Glass Style = Clear
Tempered Glass = Not Tempered
California Fire Code Label = No
Neat Glass = No
Preserve Glass = Preserve
IG Options = Argon
Hardware Finish = White
Sash Limiter = No Sash Limiter
Finger Plows = With Finger Plow(s)
Window Egress = Meets Egress 5.7 Clear Opening (Check Local Code)

Screen Option = No Screen
Check Info Link = Acoustic Ratings Info link
Room Location = 1
Is This a Remake/Re-Order = No
Specific/Additional Information = Trial 2
SKU = 339728
Vendor Name = S/OJELD-WEN PREMIUM WOOD
Vendor Number = 60058104
Customer Service = 1-800-246-9131 Option 2
Manufacturer = JELD-WEN Wood Windows & Patio Doors
Catalog Version Date = 03/31/2017
Jamb Width = 4.5625
Exterior Trim = No Exterior Trim
Sill Nosing = No Sill Nosing
Kerf Jamb = No Kerf

**End Line 200 Description**

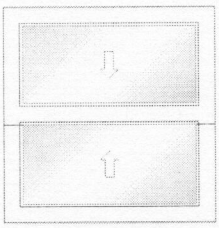

Width = 35.375
Height = 36.5
Sash Split = Even

Catalog Version 59

| Line Number | Item Summary | Was Price | Now Price | Quantity | Total Savings | Total Price |
|---|---|---|---|---|---|---|
| 300-1 | 35.375 x 36.5 Double Hung/Single Hung Double Hung | $211.32 | $211.32 | 1 | $0.00 | $211.32 |
| | Unit 300 Total: | $211.32 | $211.32 | | $0.00 | $211.32 |

**Begin Line 300 Description**

Wood W-2500 Double Hung Double Hung 35.375 x 36.5
Width = 35.375
Height = 36.5
Sash Split = Even
Quick Config = No
Operation (Outside View) = Double Hung
Assembly = Unit
DP Rating = DP25
Jambliner Color = White Jambliners
Sill Stop Applied = Yes
Exterior Color = Primed

Zip Code = custom
Custom Zip Code = 78212
Energy Star Zone = EStar Southern
Glazing Type = Insulated
Low-E Option = Low-E 366
Tinted Glass = No Tint (Clear)
Glass Style = Clear
Tempered Glass = Not Tempered
California Fire Code Label = No
Neat Glass = No
Preserve Glass = Preserve
IG Options = Argon

Screen Option = No Screen
Check Info Link = Installation Info link
Room Location = 1
Is This a Remake/Re-Order = No
Specific/Additional Information = Trial 2
SKU = 339728
Vendor Name = S/OJELD-WEN PREMIUM WOOD
Vendor Number = 60058104
Customer Service = 1-800-246-9131 Option 2
Manufacturer = JELD-WEN Wood Windows & Patio Doors
Catalog Version Date = 03/31/2017